Qynergy Corporation
3800 Osuna Road NE Suite 2
Albuquerque, NM 87109-4401
Office: (505) 890-6887
Fax: (505) 792-8508

1 August 2007

John Yankovich
United States Nuclear Regulatory Commission
Materials Safety and Inspection Branch
Division of Industrial and Medical Nuclear Safety
Two White Flint North
11545 Rockville Pike
North Bethesda, MD 20852-2738

RE: Request for SS&DR for KRT-2000 Betavoltaic Power Cell

Dear Mr. Yankovich:

Qynergy Corporation requests a Sealed Source and Device Registration number for the KRT-2000 Betavoltaic Power Cell (also known as the QynCell ™). Qynergy gives permission for the following documents to be reproduced and made available to the public.

- SS&DR Application
- Mechanical Drawing Package
- Instructions to Users
- KRT-2000 Label

Qynergy has included the following documents for information only and requests that they not be duplicated, distributed, or made available to the public. Due to the nature of the technical and manufacturing processes referenced within these documents, these items are regarded as "Qynergy Proprietary and Confidential".

- Prototype Test Report
- Addendum to Prototype Test Report
- KRT-2000 Design Report and Appendices 9.1, 9.2, 9.3, and 9.4
- Qynergy Quality Manual
- Radiation Profile Measurements

Your timely attention to this matter is greatly appreciated. If you have any questions, I can be reached at either (505) 314-1422 or stephanie.jones@qynergy.com. Thank you.

Sincerely,

Stephanie Jones
Quality Manager

Information in this record was deleted
in accordance with the Freedom of Information
Act, exemptions 4
FOIA- 2009-0173

b-1

Attachments: SS&DR Application
Mechanical Drawing Package
Instructions to Users
KRT-2000 Label
Prototype Test Report
Addendum to Prototype Test Report
KRT-2000 Design Report
KRT-2000 Design Report Appendix 9.1
KRT-2000 Design Report Appendix 9.2
KRT-2000 Design Report Appendix 9.3
KRT-2000 Design Report Appendix 9.4
Qynergy Quality Manual
Radiation Profile Measurements

Cc: Todd Bisio, President, Qynergy
Christopher Eiting, Director of Engineering, Qynergy
Viswanath Krishnamoorthy, Director of Technology and Quality Assurance, Qynergy

REGISTRY OF SEALED SOURCES AND DEVICES SAFETY EVALUATION	
Name and Complete Mailing Address of the Applicant: Qynergy Corporation 3800 Osuna Rd NE Ste 2 Albuquerque, NM 87109-4401 505-890-6887 505-792-8508 (FAX)	**Name, Title, and Telephone Number of the Individual to Be Contacted if Additional Information or Clarification is Needed by the NRC:** Stephanie Jones Quality Manager 505-314-1422
The Applicant is (check one): [ ] Custom User [ ] Manufacturer [ ] Distributor [X] Manufacturer and Distributor	**If the Applicant is Not the Manufacturer, Provide the Name and Complete Mailing Address of the Manufacturer:** N/A
If the Applicant is a Custom User, Provide the Name and Complete Mailing Address of the Distributor: N/A	**Provide the Name, Complete Mailing Address, and Function of Other Companies Involved:** See page 2 for Details
Model Number: KRT-2000	**Principal Use Code (see Appendix C):** R (Gas)
Name Used by the Industry to Identify the Product (e.g., Radiography Exposure Device, Teletherapy Source, Calibration Source, etc.): Betavoltaic Power Cell: A device that captures electrons emitted by a decaying radioisotope for the purpose of producing usable electric power	**For Use by:** [X] Specific Licensees Only [ ] General Licensees Only [ ] Both Specific and General Licensees [ ] Persons Exempt from Licensing
Leak-Test Frequency: [X] Periodic Leak-Testing is Not Required (Exempt from leak test due to ^{85}Kr gas form) [ ] 6 Months [ ] Attached is justification for a leak test frequency of greater than 6 months	**Principal Section of the 10 CFR that Applies to the User (e.g., General Licensees under 10 CFR 31.5):** Specific Licensees under 10 CFR 33.11 and General Licensees under 10 CFR 31.9 **Radionuclides and Maximum Activities (including loading tolerance):** ^{85}Kr 166.5 GBq + 20% (4.5 Ci + 20%)

CERTIFICATION:

THE APPLICANT UNDERSTANDS THAT ALL STATEMENTS AND REPRESENTATIONS MADE IN THIS APPLICATION ARE BINDING UPON THE APPLICANT.

THE APPLICANT AND ANY OFFICIAL EXECUTING THIS CERTIFICATION ON BEHALF OF THE APPLICANT, NAMED IN ITEM 2, CERTIFY THAT THIS APPLICATION IS PREPARED IN CONFORMITY WITH TITLE 10, CODE OF FEDERAL REGULATIONS, PARTS 30 AND 32 AND THAT ALL INFORMATION CONTAINED HEREIN IS TRUE AND CORRECT TO THE BEST OF THEIR KNOWLEDGE AND BELIEF.

WARNING: 18 U.S.C. SECTION 1001 ACT OF JUNE 25, 1948 62 STAT. 749 MAKES IT A CRIMINAL OFFENSE TO MAKE A WILLFULLY FALSE STATEMENT OR REPRESENTATION TO ANY DEPARTMENT OR AGENCY OF THE UNITED STATES AS TO ANY MATTER WITHIN ITS JURISDICTION.

Certifying Officer – Typed Name and Title
Christopher Eiting, PhD, PE, Director of Engineering

Signature: Christopher Eiting | **Date:** 8/1/07

KRT-2000 Manufacturer's List

Machining

1. Team Specialty Products
   1400 Eubank Blvd SE
   Albuquerque, NM 87123
   Phone 505-291-0182 fax 505-271-8354

Joining

1. California Brazing
   37955 Central Ct
   Newark, CA 94560
   Phone 510-790-2300 Fax 510-791-9300

2. EB Industries
   90 Carolyn Blvd.
   Farmingdale, NY 11735
   Phone 888-468-1991 Fax 631-752-7866

Testing

1. Eckert & Ziegler Isotope Products
   24937 Avenue Tibbitts
   Valencia, CA 91355
   Phone (661) 309-1010

2. Technical Manufacturing Industries Inc.
   9901-B Southern S.E.
   Albuquerque, NM 87123
   phone (505)-293-6136 fax (505) 275-3657

3. Jona Manufacturing
   264 DP Rd.
   Los Alamos, NM 87544
   Phone (505) 662-4611

Isotope Loading

1. Eckert & Ziegler Isotope Products
   24937 Avenue Tibbitts
   Valencia, CA 91355
   Phone (661) 309-1010

Qynergy Corporation
3800 Osuna Rd NE Suite 2
Albuquerque, NM 87109-4401
Office: 505.890.6887
Fax: 505.792.8508
Web: www.qynergy.com

1 CONDITIONS OF USE

Intended Use

The device is a prototype power cell that generates small amounts of power (microwatts) over a long time (years). The device will be used as a demonstration model for customers that have applications where small powers are needed for long periods of time. Customers will then provide specifications for new models that will be registered independently from the demonstration model.

Types of Users

The power cells will be connected to the systems that they are intended to power. The installation will be performed by radiation certified technicians (overseen by radiation safety officers) in licensed facilities. The systems they will power are primarily detection and security systems manufactured by government contractors and used by the Department of Homeland Security and the Department of Defense.

Locations of Use

This model will be tested within licensed facilities only, and will not be fielded. All radiation safety requirements will be followed including the establishment of shielded storage areas, radiation areas when in use, and ALARA practices for trained radiological workers as well as non-radiological workers in the facilities.

Occasions When Persons Will Be Near the Device and the Frequency of These Occasions

Radiation certified workers will be the only users of this model and will be near the device during set up of a demonstration. Demonstration set ups will consist of attaching wires from the system requiring power to the wires exiting the sealed device. After the initial set up, there is no requirement that a worker be near the source. Radiation barriers can be established and appropriate security measures can be taken to allow long term demonstrations.

Normal Use Conditions

This device is designed and manufactured for use as a power cell on demonstration systems housed in controlled factory settings. This device should not be subjected to conditions during use, handling, storage, and transport that exceed ISO/99/CX3344 as defined below:

- External pressure: 0 to 290 PSIA
- Working temperature: -60 and 200 Celsius
- Impact: 200 grams from 1 meter with hammer
- Vibration: 25-80 Hz for 90 minutes and up to 80-2000 Hz @ 20 g-force
- Puncture: 50 grams from 1 meter with nail
- Corrosive environment: Not to be used in a highly corrosive environment such as acids, sea water or salts.

This device has been evaluated based on these conditions and tested based on the following possible modes of failure under normal use conditions:

- Drop-from no more than a table height
- Impact-from a tool being dropped on the device during hook up
- Impact-from another package dropped onto the packaged device during transport
- Heat-from an overheated electronic part in the system the device is connected to
- Vibration-from small fans on the systems the device is connected to
- Vibration-from transport vehicles

The registered device will not come into contact with any corrosives during normal use. Also, the materials of construction are not detrimentally affected by the expected exposure to radiation either from internal or external sources during normal operation.

Expected Working Life of the Source/Device (Years, Operations)

The expected useful life of the KRT-2000 is 20 years. No regular maintenance is required. Actual working life is dependent on activity and power requirements for the end user. At the end of the working life of the device, the KRT-2000 will be returned to the manufacturer specified subcontractor for disposal. No devices will be returned to Qynergy.

2 CONSTRUCTION OF THE PRODUCT

The KRT-2000 is a single wall, welded pressure vessel constructed of 316 stainless steel. It has a hermetic ceramic to metal feedthrough for electrical connection to the converters inside the device, and a brazed and crimped copper fill tube for the introduction of ^{85}Kr. The steel structure provides both the seal as well as limited shielding for the ^{85}Kr. Additional shielding may be required once installed as part of a larger system for demonstration. The package is leak tested prior to the introduction of ^{85}Kr. The package is rated to handle pressures that far exceed the ^{85}Kr loading pressure of 150 psi. Note: ^{85}Kr is a beta and gamma emitter. All beta radiation is shielded by the steel case.

Within the pressure vessel, epoxied to the inside walls, are two PC boards upon which are soldered the semiconductor converters that generate the electrical power. 5% ^{85}Kr gas and 95% Ar fill the remainder of the space. The crimped fill tube and electrical feedthrough are protected by a cap that is fastened into place. Two electrical leads exit the cap and provide the electrical power output.

See Attachment 1 Mechanical Drawing Package.

Handling and Installation

The device has a radiation signature and should be handled according to ALARA recommended practices. During transport, the KRT-2000 should be carried inside its shielded shipping container. Once it is ready for installation, the KRT-2000 should be handled with tongs to position it into its mounting brackets or clips. See Attachment 2 Instructions to Users for further details. Once in position, the wires can be attached to the system the KRT-2000 will be powering and additional shielding (lead or tungsten recommended) can be put into place.

Materials

See Attachment 1 Mechanical Drawing Package.

Dissimilar Materials

Mismatch in Coefficient of Thermal Expansion (CTE) between dissimilar materials will not be a concern in this design as the operational temperature range is small enough that the dimensional changes will not appreciably affect the integrity of the hermetic seal. The locations of the dissimilar materials are in the electric feedthrough and the fill tube. The feedthrough is rated for a temperature range of -268C to 450C. The CTE mismatch between the 316 SST and the Copper fill tube is very small.

The KRT-2000 is only designed for operation in an air environment, hence galvanic corrosion effects will be negligible.

3 LABELING

All devices are labeled with the trefoil symbol on the large face of the device. The opposite large face of the device is labeled with the following:

QYNCELL
Caution: Radioactive Material
Kr-85
Serial Number
Part Number
Activity and Date of Assay
www.qynergy.com

All labels are permanently etched into the outside surface of the device package. See Attachment 3 KRT-2000 Label for details.

4 PROTOTYPE TESTING

The device has been tested according to standard procedures in ISO2919:1999 (ANSI/HPS N43.6-1997 Sealed Radioactive Sources – Classification equivalent). In

order to meet the demands of normal use conditions and possible failure modes under those normal use conditions, the device has been tested to the following classes:

Temperature:	Class X
(Modified Class 3 with expanded temperature range of -60 to 200°C)	
External Pressure:	Class 3
Impact:	Class 3
Vibration:	Class 4
Puncture:	Class 4

All prototypes were pressurized with He and leak tested according to ISO9978:1992 (ANSI/HPS N43.6-1997 Section A.2.2.5 equivalent). All devices passed classification ISO/99/CX3344.

5 RADIATION PROFILES

Radiation profiles for the KRT-2000 devices were both modeled and directly measured at contact, 5 cm, 30 cm, and 100 cm from all faces of the device. Direct measurements were completed for a 5.49 Ci loading (slightly higher than the 5.4 Ci maximum including tolerance). Maximum dose rates are present along the axis passing through the large faces of the KRT-2000. The theoretical model was validated using these direct measurements.

Distance (cm)	Total Dose Rate (mrem/hr)
0 (Contact)	3200
5	1220
30	109
100	11

Maximum Measured Dose Rates for 5.49 Ci KRT-2000

6 QUALITY ASSURANCE AND QUALITY CONTROL

The Qynergy Quality Manual details the quality control of these devices from raw materials to finished product. The program is designed to satisfy 10 CFR Part 50 (B). The program covers design and document control, purchasing, training, calibration records, device numbering, production, assay quality control, and confirming orders. The program also ensures that

1. The materials of construction and the final assembly meet the design specifications
2. The final product is leak tested.
3. A final radiation profile is performed.
4. A test is performed that verifies the KRT-2000 is operational and all safety components are operating properly.

5. A visual and mechanical inspection of critical safety components and components susceptible to failure under extreme conditions is performed.

In addition the program allows for the tracking of as-built specifications for each individual device including all version controlled documentation used in the manufacturing process.

All documents and activities related to the manufacturing of KRT-2000 cells are governed by the Qynergy Quality Manual.

7 INSTALLATION, SERVICING, AND INSTRUCTIONS TO USERS

Installation, relocation, and radiation surveys may be performed by specific licensees. Maintenance, repair, source exchange, calibration, and training will be provided by the distributor. No leak testing is required following the initial leak test performed by the manufacturer due to the gas form of the ^{85}Kr.

See Attachment 2, Instructions to Users

Attachment 1

Mechanical Drawing Package

REVISIONS			
REV	DESCRIPTION	DATE	APPROVED
A	UPDATED PART LIST, ADDED UNLOADED VIEW, UPDATED TITLE BLOCK	02/23/07	C. ETTING

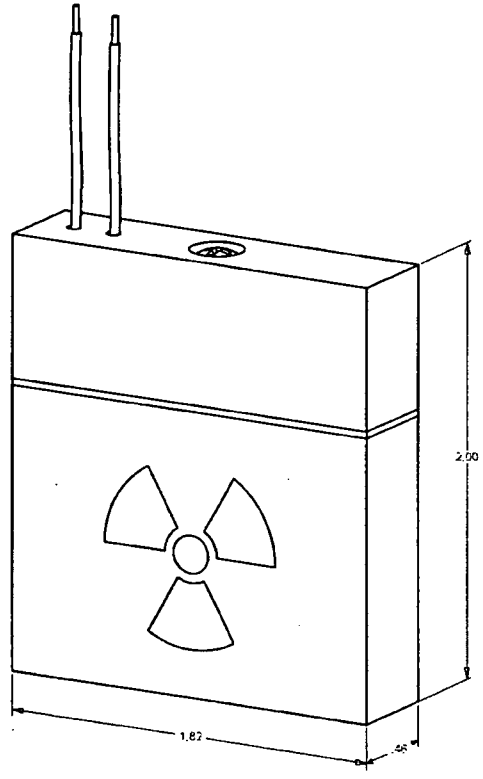

ISO VIEW SHOWING LOADED QYNCELL

APPROXIMATE MASS: 100 GRAMS

NOTES: UNLESS OTHER WISE SPECIFIED

1. ALL DIMENSIONS IN INCHES
2. DIMENSIONS AND TOLERANCING PER ASME Y14.5M-1994
3. ASSEMBLE PER KRT-2000 ASSEMBLY PROCEDURE
4. LASER ETCH OR EQUIVALENT, TREFOIL ON SIDE SHOWN, FOLLOWING TEXT OTHER SIDE, CENTERED:

QYNCELL
CAUTION - RADIOACTIVE MATERIAL
KRYPTON-85
ACTIVITY
DATE OF LOADING
SERIAL NUMBER
PART NO. KRT-2000 REV
WWW.QYNERGY.COM

5 APPLY THREAD LOCKER PER LOCTITE SPECS

ITEM	QTY	PART NO.	DESCRIPTION	MATERIAL
18	A/R	HD Microsystems #PI-2566	POLYIMIDE COATING	POLYIMIDE
17	A/R	MasterBond #EP21TDCHT	NON CONDUCTIVE EPOXY	EPOXY
16	A/R	Jaguar Ind. #JKY22-0	22 GA. WIRE -BLACK	COPPER/KYNAR
15	A/R	Jaguar Ind. #JKY22-2	22 GA. WIRE -RED	COPPER/KYNAR
14	1	Swagelok#SS-4-VCR-6-200	1/8" TUBE TO 1/4" VCR ADAPTER	304 SST
13	A/R	MasterBond Supreme ht 10/s	ELECTRICALLY CONDUCTIVE EPOXY	EPOXY
12	A/R	McMasterCarr#91458A88	LOCTITE 271 HIGH STRENGTH THREAD LOCKER	EPOXY
11	1	McMasterCarr#90826A619	PAN-HD #4-4- 5/8"LG	SST
10	1	McMasterCarr#91400A050	PAN-HD #2-56 1/8"LG	SST
9	1	McMasterCarr#7113K302	RING TERMINAL	SST
8	A/R	Jaguar Ind. #JKY30-0	30 GA. WIRE	COPPER/KYNAR
7	A/R	Indium #121 and flux #3	SOLDER	TIN/SILVER
6	2	KRT-2200-1 REV A	PC BOARD ASSEMBLY	FR-4/GOLD
5	1	KRT-2100-1 REV A	LID ASSEMBLY	SST/COPPER/CERAMIC
4	1	KRT-2004-1 REV A	BOTTOM CAP	SST
3	1	KRT-2003-1	GASKET	KALREZ
2	1	KRT-2002-1 REV A	CAP	SST
1	1	KRT-2001-1 REV A	CASE	SST

PARTS LIST

UNLESS OTHERWISE SPECIFIED DIMENSIONS ARE IN INCHES TOLERANCES:
ANGULAR: ±
.XX ±
.XXX ±
.XXXX ±
ALL MACHINED SURFACES 250 RMS FINISH

FINISH:

PART NO. KRT-2000

THIRD ANGLE PROJECTION

	SIGNATURE	DATE
Designer	Edward Romano	12/4/2006
Checker	Edward Romano	12/4/2006
Approved	Chris Ebing	12/4/2006

Qynergy
www.qynergy.com

TITLE: QYNCELL
KR-85 QYNCELL
MODEL KRT-2000 QYNCELL

SIZE: A | DWG NO. KRT-2000 | REVISION A | D. ~~1 of 2~~ 5 of 1

-9-

REVISIONS			
REV	DESCRIPTION	DATE	APPROVED
A	CHANGED PART # ON ITEM #3 TO -06(MOLIBDENUM CONDUCTOR), UPDATED REV'S	03/01/07	C. ETING

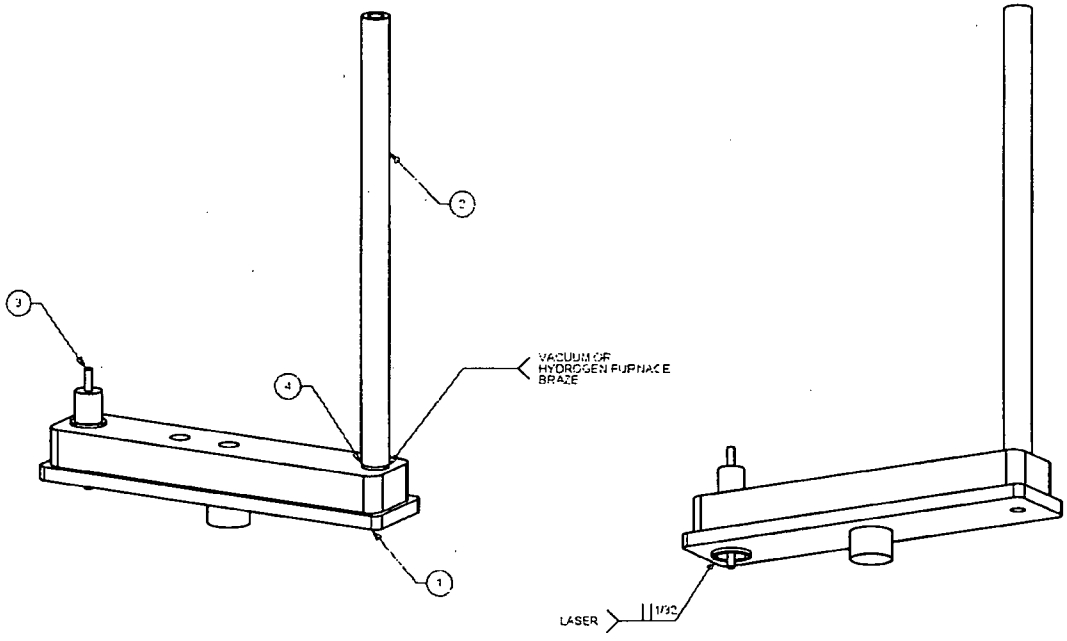

PROCEDURE:

STEP 1: BRAZE JOINT IS MADE
STEP 2: ITEM #3 IS WELDED

ITEM	QTY	PART NO.	DESCRIPTION	MATERIAL
4	A/R	N/A	BRAZING COMPOUND	82%Au, 18%Ni
3	1	Ceramaseal 9297-06-W	SINGLE CONDUCTOR FEEDTHROUGH	MISC.
2	1	KRT-2102-1 REV A	FILL TUBE	COPPER
1	1	KRT-2101-1 REV A	LID	316 SST

PARTS LIST

NOTES: UNLESS OTHER WISE SPECIFIED

1. ALL DIMENSIONS IN INCHES
2. DIMENSIONS AND TOLERANCING PER ASME Y14.5M-1994
3. SURFACE TEXTURE PER ANI/ASME B 46.1-1985
4. REMOVE ALL BURRS AND BREAK SHARP EDGES TO A MAXIMUM OF .015
5. ALL INSIDE CORNERS TO BE .015 RADIUS MAX
6. COUNTERSINK 82 DEGREES ALL TAPPED HOLES TO MAJOR DIAMETER
7. COUNTERSINK 82 DEGREES APPROXIMATELY .03/.06 DEEP ALL DRILLED HOLES
8. PARTS TO BE THOROUGHLY CLEANED TO REMOVE ALL OIL, GREASE, DIRT AND CHIPS

UNLESS OTHERWISE SPECIFIED DIMENSIONS ARE IN INCHES
TOLERANCES
DECIMALS ±
ANGULAR ±
FINISH
MATERIAL
NEXT ASSY
USED ON

THIRD ANGLE PROJECTION

	SIGNATURE	DATE
DRAWN	Edward Romero	12/4/2006
CHECKED	Edward Romero	12/4/2006
ENGINEER	Chris Eting	12/4/2006

Qynergy
www.qynergy.com

TITLE: QYNCELL
KR-85 QYNCELL
LID ASSEMBLY

PART NO. KRT-2100-1

DWG NO. KRT-2100 REV A SIZE D ~~1 of 1~~ SHEET

8 7 6 5 4 3 2 1
D C B A

-10-

Attachment 2

QYNCELL INSTALLATION-INSTRUCTIONS TO USERS

Only authorized and properly trained personnel may open a package containing a QynCell. Please verify that the package is in good condition and that the QynCell is properly shielded in its shipping container.

Please note that the QynCell must be mounted in a location compatible with the "Conditions of Normal Use" and "Limitations and/or Other Considerations of Use" indicated on the registration certificate. No modifications may be made to the QynCell for use in the desired location. Compromising the integrity of the QynCell case could result in a release of radioactive material.

Installation

1. Establish a perimeter around the QynCell package before opening. The QynCell contains ^{85}Kr and has a gamma radiation signature. Please see the accompanying documents for dose rates.
2. Open the package according to your shipping and receiving procedures for radioactive sources.
3. Verify dose rates and perimeter location once unpacked.
4. Use lead or other heavy metal shielding to reduce exposure during installation.
5. Do not remove the screw in the cap of the QynCell.
6. There are two wires leading from the top of the QynCell. Connect the black wire to ground and the red wire to the positive input of the system you are trying to run. Connection can be via soldering iron or screw terminals. Power is immediately available just like a battery.
7. If mounting is necessary, you must use exterior metal clips to hold in place. Clip into place so that the information label is visible. Do not puncture the QynCell in any way. Do not use tape as this will cover the labeling and can degrade from radiation. Do not weld or use any adhesives to keep the QynCell in place.
8. Finish placing shielding and perimeter barriers as needed for the location in which the QynCell has been installed.

Troubleshooting/Servicing

1. If the QynCell does not provide power, ensure wires are properly connected.
2. If the QynCell continues to fail to provide power, notify the manufacturer immediately. Do not attempt to repair.
3. When the QynCell stops providing adequate power, please return it to the manufacturer specified subcontractor and notify the manufacturer. Follow your shipping and receiving instructions for radioactive materials. Do not attempt to repair.

Attachment 3

KRT-2000 Label

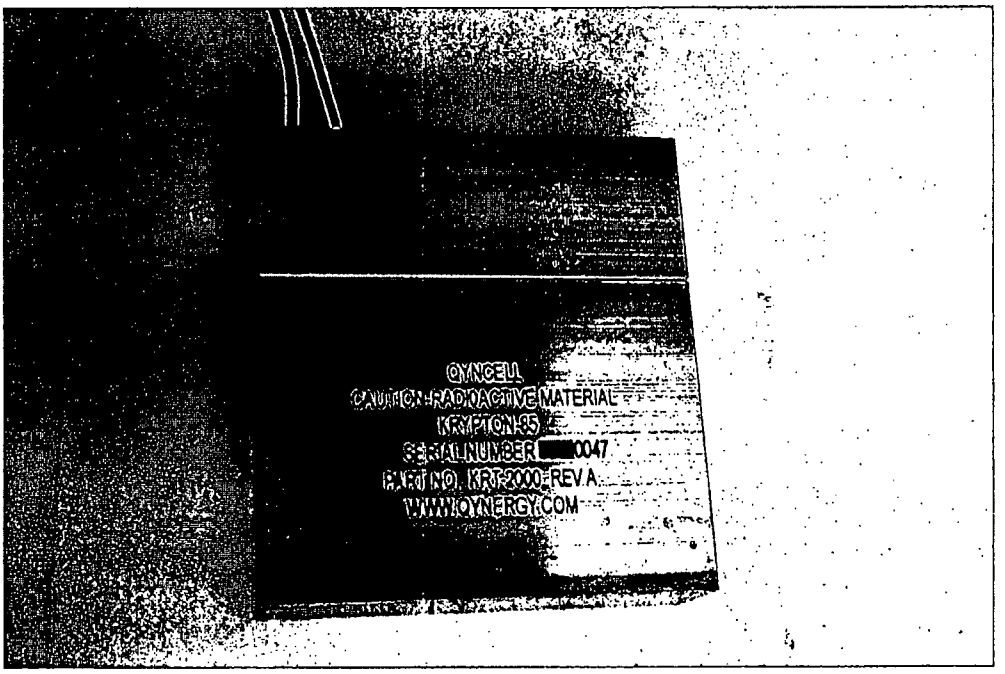

Information Label View of KRT-2000

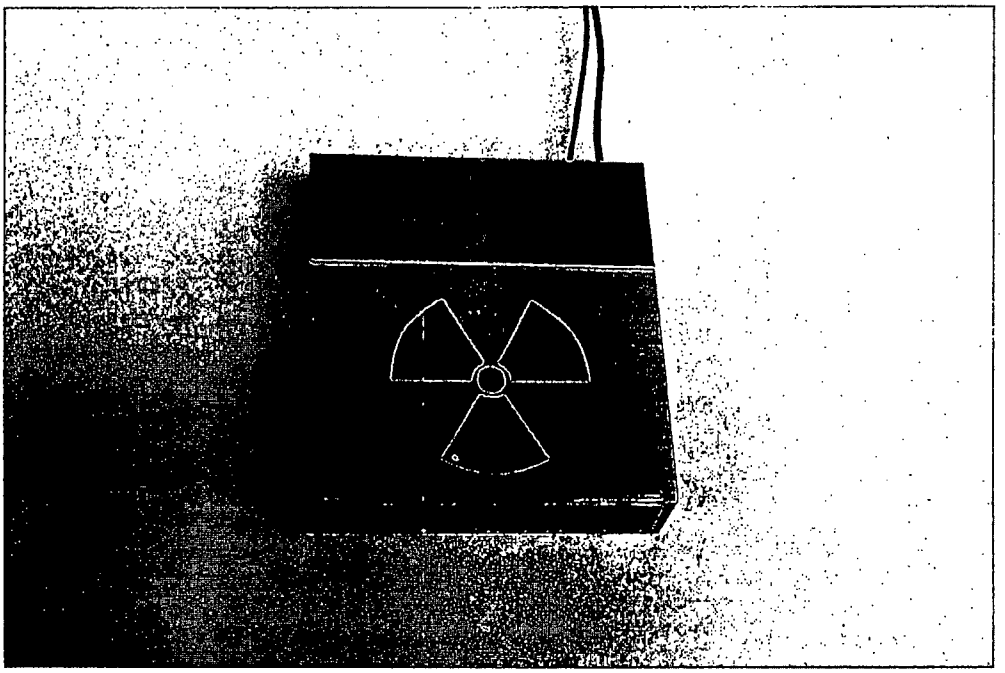

Trefoil View of KRT-2000

FOIA-2009-0173

The following attachments (**pages 15-117**) were subject to FOIA Exemption 4 and have been fully redacted:

- Prototype Test Report
- Addendum to Prototype Test Report
- KRT-2000 Design Report and Appendices 9.1, 9.2., 9.3, and 9.4
- Qynergy Quality Manual
- Radiation Profile Measurements