BSC

Design Calculation or Analysis Cover Sheet

Complete only applicable items.

1. QA: QA
2. Page 1

3. System	4. Document Identifier
Initial Handling Facility	51A-DBC-IH00-00100-000-00A

5. Title
Initial Handling Facility (IHF): Concrete Structure Design

6. Group
Civil / Structural /Architectural

7. Document Status Designation
☐ Preliminary ☒ Committed ☐ Confirmed ☐ Cancelled/Superseded

8. Notes/Comments

This Calculation supersedes Calculation 51A-SSC-IH00-00300-000-00A.

Attachments		Total Number of Pages
Attachment A	Shield Plug & Port Slide Gate Loads	2
Attachment B	SAP2000 Model Sketches	10
Attachment C	SAP2000 Analysis Model of IHF Concrete Structure	1+CD
Attachment D	SAP2000 Design Output Forces & Moments	1+CD
Attachment E	Foundation Basemat Input & Output Forces	1+CD

RECORD OF REVISIONS

9. No.	10. Reason For Revision	11. Total # of Pgs.	12. Last Pg. #	13. Originator (Print/Sign/Date)	14. Checker (Print/Sign/Date)	15. EGS (Print/Sign/Date)	16. Approved/Accepted (Print/Sign/Date)
00A	Initial Issue	198	E-1	Jason Paredes 12/3/07 Hsien-Hsiu Ko Section 6.4 - 6.8 12/3/07	Kuo-Chu Hsu 12/3/07 Ray Chou SAP2000 Computer Model 12/3/07	Salvador Macias 12/3/07	Raj Rajagopal 12/3/07

DISCLAIMER

The calculations contained in this document were developed by Bechtel SAIC Company, LLC (BSC) and are intended solely for the use of BSC in its work for the Yucca Mountain Project.

CONTENTS

FIGURES

TABLES

ACRONYMS

3D	Three-dimensional
BDBGM	Beyond Design Basis Ground Motion
BSC	Bechtel SAIC Company
CD	Compact Disk
DC	Demand Capacity Ratio
DL	Dead Load
DBGM-2	Design Basis Ground Motion 2
FE	Finite Element
FEM	Finite Element Model
IBC	International Building Code
IHF	Initial Handling Facility
ITS	Important to Safety
K	Kips
KSF	Kips per Square Feet
KSI	Kips per Square Inch
LL	Live Load
PC	Personal Computer
PSF	Pounds per Square Feet
PSI	Pounds per Square Inch
QA	Quality Assurance
SAP2000	SAP2000 Structural Analysis Software Version 9.1.4
SRSS	Square Root of the Sum of the Squares
SSI	Soil Structure Interaction
YMP	Yucca Mountain Project

1. PURPOSE

The purpose of this calculation is to perform a Tier-1 dynamic analysis, using Design Basis Ground Motion (DBGM-2) seismic design spectra data, for the Initial Handling Facility (IHF), in order to design the concrete walls, roof slabs, and floor slabs. Results from this calculation will confirm that the wall thicknesses assumed in the Tier-1 dynamic analyses are adequate for the imposed loadings. Output from this calculation will be used in creating the IHF reinforcing drawings, the foundation base mat forces, and fragility evaluations as part of the license application. IHF steel structure and foundation mat design are excluded from this calculation.

2. REFERENCES

2.1 PROJECT PROCEDURES/DIRECTIVES

2.1.1 BSC (Bechtel SAIC Company) 2007. EG-PRO-3DP-G04B-00037, Rev.010. *Calculations and Analyses.* Las Vegas, Nevada: Bechtel SAIC Company. ACC: ENG.20071018.0001.

2.1.2 BSC (Bechtel SAIC Company) 2007. IT-PRO-0011, Rev. 007. *Software Management*. Las Vegas, Nevada: Bechtel SAIC Company. ACC: DOC.20070905.0007.

2.2 DESIGN INPUTS

2.2.1 BSC (Bechtel SAIC Company) 2007. *Basis of Design for the TAD Canister-Based Repository Design Concept*. 000-3DR-MGR0-00300-000-001. Las Vegas, Nevada: Bechtel SAIC Company. ACC: ENG.20071002.0042.

2.2.2 BSC (Bechtel SAIC Company) 2006. *Seismic Analysis and Design Approach Document*. 000-30R-MGR0-02000-000-000. Las Vegas, Nevada: Bechtel SAIC Company. ACC: ENG.20061214.0008.

2.2.3 BSC (Bechtel SAIC Company) 2007. *Project Design Criteria Document.* 000-3DR- MGR0-00100-000, Rev 007. Las Vegas, Nevada: Bechtel SAIC Company. ACC: ENG.20071016.0005.

2.2.4 BSC (Bechtel SAIC Company) 2007. *Initial Handling Facility General Arrangement Ground Floor Plan.* 51A-P10-IH00-00102-000 REV 00B. Las Vegas, Nevada: Bechtel SAIC Company. ACC: ENG.20071101.0003.

2.2.5 BSC (Bechtel SAIC Company) 2007. *Initial Handling Facility General Arrangement Second Floor Plan.* 51A-P10-IH00-00103-000 REV 00B. Las Vegas, Nevada: Bechtel SAIC Company. ACC: ENG.20071101.0004.

2.2.6 BSC (Bechtel SAIC Company) 2007. *Initial Handling Facility General Arrangement Plan at Elevation +73'-0".* 51A-P10-IH00-00104-000 REV 00B. Las Vegas, Nevada: Bechtel SAIC Company. ACC: ENG.20071101.0005.

2.2.7 BSC (Bechtel SAIC Company) 2007. *Initial Handling Facility General Arrangement Sections A & B*. 51A-P10-IH00-00106-000 REV 00B. Las Vegas, Nevada: Bechtel SAIC Company. ACC: ENG.20071101.0007.

2.2.8 BSC (Bechtel SAIC Company) 2007. *Initial Handling Facility General Arrangement Sections C, D, & E.* 51A-P10-IH00-00107-000 REV 00B. Las Vegas, Nevada: Bechtel SAIC Company. ACC: ENG.20071101.0008.

2.2.9 BSC (Bechtel SAIC Company) 2007. *Initial Handling Facility General Arrangement Sections F, G, H & J.* 51A-P10-IH00-00108-000 REV 00B. Las Vegas, Nevada: Bechtel SAIC Company. ACC: ENG.20071101.0009.

2.2.10 BSC (Bechtel SAIC Company), 2007. *5-DHLW/DOE SNF-Short Co-Disposal Waste Package Configuration.* 000-MW0-DS00-00102-000-00C, Las Vegas, Nevada: Bechtel SAIC Company. ACC: ENG.20070719.0003.

2.2.11 BSC (Bechtel SAIC Company), 2007. *5-DHLW/DOE SNF-Short Co-Disposal Waste Package Configuration.* 000-MW0-DS00-00103-000-00C, Las Vegas, Nevada: Bechtel SAIC Company. ACC: ENG.20070719.0004.

2.2.12 BSC (Bechtel SAIC Company), 2007. *Initial Handling Facility (IHF): Design Loads for the Steel and Concrete Structures*. 51A-SYC-IH00-00700-000-00A, Las Vegas, Nevada: Bechtel SAIC Company. ACC: ENG.20071106.0008.

2.2.13 Not Used

2.2.14 ACI 349-01. 2001. *Code Requirements for Nuclear Safety Related Concrete Structures (ACI 349-01)*. Farmington Hills, Michigan: American Concrete Institute. ISBN: 0-87031-041-0. TIC: 252732.

2.2.15 ASCE 4-98. 2000. *Seismic Analysis of Safety-Related Nuclear Structures and Commentary*. Reston, Virginia: American Society of Civil Engineers. ISBN: 0-7844-0433-X. TIC: 253158.

2.2.16 SAP2000 V. 9.1.4. 2007. WINDOWS XP. STN: 11198-9.1.4-01. (DIRS 182484)

2.2.17 DOE (U.S. Department of Energy) 2007. *Software Validation Report for: SAP2000 Version 9.1.4.* Document ID: 11198-SVR-9.1.4-01-WinXP. Las Vegas, Nevada: U.S. Department of Energy, Office of Repository Development. ACC: MOL.20070118.0264. (DIRS 179105).

2.2.18 ACI 340R-97. *ACI Design Handbook, American Concrete Institute Special Publication; SP-17(97)*. Farmington Hills, Michigan: American Concrete Institute. ISBN: 0-087031-045-3. TIC: 259479.

2.2.19 MacGregor, J.G. 1997. *Reinforced Concrete, Mechanics and Design.* Prentice Hall International Series in Civil Engineering and Engineering Mechanics. 3rd Edition. Upper Saddle River, New Jersey: Prentice Hall. ISBN: 0-13-233974-9. TIC: 242587. (DIRS 130532).

2.2.20 Wang, Chu-Kai and Salmon, Charles G. *Reinforced Concrete Design*. Sixth Edition. 1998. Menlo Park, California: Addison-Wesley. ISBN: 0-521-98460-9. TIC: 259517

2.2.21 MO0706DSDR5E4A.001. *Seismic Design Spectra for the Surface Facilities Area at 5E-4 APE for Multiple Dampings*. Submittal date: 06/14/07. TBV # 9130. (DIRS 181422).

2.2.22 BSC (Bechtel SAIC Company) 2007. *Initial Handling Facility WP Handling Crane Mechanical Equipment Envelope.* 51A-MJ0-HMP0-00101-000 REV 00B. Las Vegas, Nevada: Bechtel SAIC Company. ACC: ENG.20071017.0007.

2.2.23 BSC (Bechtel SAIC Company) 2007. *CRCF, IHF, RF, & WHF* Port Slide Gate Mechanical Equipment Envelope.* 000-MJ0-H000-00301-000 REV 00B. Las Vegas, Nevada: Bechtel SAIC Company. ACC: ENG.20071101.0015.

2.3 DESIGN CONSTRAINTS

None

2.4 DESIGN OUTPUTS

Results from this calculation will be used as input for the IHF reinforcing drawings, the IHF foundation design, and the IHF seismic fragility evaluation for the concrete structure.

3. ASSUMPTIONS

3.1 ASSUMPTIONS REQUIRING VERIFICATION

3.1.1 SAP2000 Analysis Model

The SAP2000 finite element concrete model was established based on dimensions delineated on the Initial Handling Facility General Arrangement drawings (Ref. 2.2.4 through Ref. 2.2.9).

Rationale: The IHF concrete outline from Ref. 2.2.4 through Ref. 2.2.9 represents the configuration for the building as the basis for the Tier-1 seismic analysis. The IHF structural details outlined in these drawing will be verified in the detailed structural design. This assumption is being tracked in CalcTrac.

This assumption is used in Section 6.1.

3.1.2 Shield Plug Loads

Superimposed dead loads due to shield plug are proposed on the floor slab (EL 37’-0”) along column line 7, as four concentrated loads around the recessed shield plug area of the slab.

Rationale: The considered shield plug location is based on the Initial Handling Facility General Arrangement drawings (Ref. 2.2.4 through Ref. 2.2.9) and shield plug loads determined from component specifications (Ref 2.2.10 and Ref 2.2.11). The derivations of the loads are contained in Attachment A. This assumption is being tracked in CalcTrac.

This Assumption is used in Section 6.3.5.

3.1.3 Port Slide Gate Loads

Superimposed dead loads due to the weight of the port slide gates are proposed at two locations of the floor slab (EL 37’-0”) between column lines 5 – 7 and column lines 7 – 8, as four concentrated loads around each opening of the slab.

Rationale: The port slide gate locations are based on the Initial Handling Facility General Arrangement drawings (Ref. 2.2.4 through Ref. 2.2.9) and port slide gate loads determined from component specifications (Ref 2.2.23). The derivations of the loads are contained in Attachment A. This assumption is being tracked in CalcTrac.

This Assumption is used in Section 6.3.6.

3.1.4 Torsion Effect

To account for accidental torsion eccentricity effects, the SAP2000 analysis resultant forces and moments are increased by 15% to perform the IHF concrete structure design.

Rationale: In Section 3.1.1 (e) of ASCE 4-98 (Ref 2.2.15) it requires that seismic design forces be increased to account for an accidental torsion eccentricity and the effects of non-vertically incident or incoherent waves. The complexity of loading makes the center of mass calculation imprecise. Thus, common practice by applying 15% increase for forces and moments will equalize the effect of accidental torsion. This assumption is being tracked in CalcTrac.

This Assumption is used in Section 6.3.8.

3.1.5 Load Combination Usage

Only DL + .25 LL +/- Seismic (D + .25 LL) load combination will be used in this design.

Rationale: These are preliminary calculations, and DL + .25 LL + Seismic (D + .25 LL) combination govern over load combinations delineated in the *Project Design Criteria* (Ref. 2.2.3). The combination used is number 9 from Section 4.2.11.4.5, Ref. 2.2.3, in which case this calculation excludes fluid loads, lateral earth pressure loads, thermal loads, and operating reaction loads. 25% LL are considered as stated in Section 8.3.1 of Ref. 2.2.2.

The other load combinations will not be considered in this phase of the design calculations. All the other loads will be left to the detailed design. This assumption is being tracked in CalcTrac.

This Assumption is used in Section 4.3.3, 6.3.3, and 6.3.7.

3.1.6 Reinforcing for Floor Slabs at EL 28’-1” & EL 26’-9”

The floor slabs are one way slabs, spanning N-S direction, separated from main concrete structure that is supported by steel framing with a metal deck. For simplicity, use #7 @ 12” Top & Bottom, Each Way, in both concrete slabs.

Rationale: All detail calculations for concrete slab and connectivity between concrete slab, steel beam, metal deck, and shear connectors, etc., will be performed in the detailed design. #7 @ 12” Top & Bottom, Each Way, is used for simplicity based on thickness of 28” and 12” for EL 28’-1” & EL 26’-9”, respectively. This assumption is being tracked in CalcTrac.

This Assumption is used in Section 6.6 and 6.7.

3.2 ASSUMPTIONS NOT REQUIRING VERIFICATION

3.2.1 Reduction of mass due to doorway or entrance openings at the walls is not considered. Reduction of mass due to step-up in foundation height is not considered, the base was kept at EL 0’-0” from column line 1 to 3.

Rationale: This additional mass consideration will result in acceptable/conservative design of the IHF concrete structure and foundation base mat.

This Assumption is used in Section 4.3.4.

4. METHODOLOGY

4.1 QUALITY ASSURANCE

This calculation was prepared in accordance with EG-PRO-3DP-G04B-00037, *Calculations and Analyses* (Ref. 2.1.1). Section 3.1.2 of the *Basis of Design for the TAD Canister–Based Repository Design Concept* (Ref. 2.2.1) classifies the IHF structure as ITS. Therefore, the approved record version of this calculation is designated as QA: QA.

4.2 USE OF SOFTWARE

4.2.1 Microsoft Office 2000

Excel 2000, which is part of the Microsoft Office 2000 suite of programs, was used in this calculation. Microsoft Office 2000 as used in this calculation is classified as Level 2 software usage as defined in IT-PRO-0011 (Ref. 2.1.2). Microsoft Office 2000 is listed on the current Controlled Software Report (SW Tracking Number 610236-2000-00).

The software was executed on a PC system running Microsoft Windows 2000 operating system. Excel 2000 was used to generate SAP2000 input in this calculation and perform design calculations based on output from SAP2000. Results were confirmed by visual inspection and by performing hand calculations.

4.2.2 SAP2000 Version 9.1.4

SAP2000, Version 9.1.4 as used in this calculation is classified as Level 1 software usage as defined in IT-PRO-0011 (Ref. 2.1.2). This software is a commercially available computer program qualified to perform static and dynamic analysis of structural systems. SAP2000 was based on manual input and output was used to design the concrete structure in Excel 2000 and MathCAD. The software validation report is given in 11198-SVR-9.1.4-01-WinXP (Ref. 2.2.17). This software is listed in the Qualified and Controlled Software Report as qualified with Software Tracking Number 11198-9.1.4-01.

4.2.3 MathCAD Version 13

MathCAD Version 13 was utilized to compute the mathematical computations in this calculation. MathCAD was operated on a PC system running the Windows XP operating system. MathCAD as used in this calculation is considered as level 2 software usage as defined in IT-PRO-0011 (Ref. 2.1.2). MathCAD Version 13 is listed on the current Software Report (SW Tracking Number 61116).

All MathCAD input values and equations are stated in the calculation. Equations used in the MathCAD template were taken from the references as noted throughout the calculation. Checking of the MathCAD template was done by using a hand calculator.

The software is operated on a PC system running the Windows XP operating system.

4.3 DESIGN METHODOLOGY

4.3.1 IHF Concrete Structure Configuration

To perform the SAP2000 analysis, the IHF concrete structure is analyzed as two separate structures due to the 6-inch seismic expansion gap as noted in Section A of Ref. 2.2.7. The two concrete structures will be analyzed as follows:

- IHF Concrete Structure between column lines 1 – 3
- IHF Concrete Structure between column lines 3.6 – 8

The IHF concrete structure between column lines 1 – 3 is oriented east-west and with symmetrical configuration along the longitudinal direction (i.e. the walls along the column lines “E” and “F” will be

identical). To minimize the unsupported roof slab length, the north and south walls of this building will also be supported with similar north-south buttress walls at column lines 1, 2, 2.3, 2.7, and 3. The WP Handling Crane which travels between column line 1 and 3 will be utilized to perform placement of the pack container on the dispatch carrier. This IHF concrete structure will facilitate the task of dispatching the packaged containment to the repository location.

The IHF concrete structure between column lines 3.6 - 8 is an easterly continuation of the previous concrete structure and also with similar construction along the longitudinal directions. However, only the south wall along column line F will have an oversized opening at the wall between column lines 7 and 8 to facilitate the horizontal transfer of the canister. The floor slab between column lines 3.6 and 5 will have a longitudinal opening at the center (along east-west direction) to facilitate tilting of the pack container. The floor slab between column lines 5 and 7 and between column lines 7and 8 will have a canister transfer opening along with a recessed opening west of column line 7, which acts as a lid staging pocket as noted in Ref. 2.2.5.

Additional details of the performed tasks of this building are outlined in Ref. 2.2.1.

4.3.2 IHF Concrete Structure Design

This calculation uses the results of the SAP2000 analysis under DBGM-2 conditions to perform a preliminary design of the IHF concrete walls, roof and floor slabs. Design of the foundation base mat is contained in separate calculations and is not addressed in this calculation. The SAP2000 concrete walls, roof, and floors are shown as sketches in Attachment B. These sketches were developed from the Initial Handling Facility General Arrangement drawings (Ref. 2.2.4 through Ref. 2.2.9).

4.3.2.1 Concrete Wall Design

In plane forces and moments such as axial compression/tension, in plane shear, and in plane moment are based on integrated section cut forces from SAP2000 and used for wall design. Out of plane shear and out of plane moments are attained from shell elements, which are also used for wall design. The concrete walls are designed per shear wall design methodology from Section D5.1 of Ref. 2.2.2. The design of the buttress walls is based off a load case in which the WP Handling crane is aligned with a buttress (Crane Position 2 model, Attachment C), in order to achieve critical shear at buttress walls.

4.3.2.2 Slab design

Similar to the concrete walls, in plane forces and moments such as axial compression/tension, in plane shear, and in plane moment are based on integrated section cut forces from SAP2000 and used for slab design. Out of plane shear and out of plane moments are also attained from shell elements, which are also used for slab design as well. In-plane tension is taken into consideration and used for design of reinforcement per commentary Figures FL-2 and FL-3 of ACI 340R-97 (Ref. 2.2.18). The slabs are designed for combined bending and axial tension. Transverse shear is checked as per ACI 349-01 (Ref. 2.2.14).

4.3.3 Analysis Loads and Load Combinations

For Tier-1, analysis loads due to self-weight, superimposed dead loads, live loads, and seismic loads are derived and utilized to perform design of the IHF concrete structure. The seismic analysis loads are derived by utilizing a 2000-year return period earthquake (DBGM-2) response spectra (Ref. 2.2.21) at 7% structural damping as specified in Section 7.2.4.2, Table 7-1 of Ref. 2.2.2.

The governing load combination used is DL + .25 LL +/- Seismic (D + .25 LL), see assumption 3.1.5. The analysis loads utilized to perform the SAP2000 analysis are compiled in section 6.3 of this calculation.

4.3.3.1 Foundation Reactions

The base joint reactions will be used as input loads to the IHF foundation mat design by using the methodology described below.

The joint accelerations are gathered from separate Response Spectrum Analysis done for each earthquake component, Ex, Ey, and Ez, respectively. Then static equivalent joint forces are obtained by multiplying each individual nodal assembled mass by its corresponding acceleration for each of the three earthquake components. To derive the set of static base joint reactions, the analysis is re-run with the calculated seismic joint forces, Fx, Fy, and Fz, using the SAP2000 model of the IHF concrete structure (See Attachment E for output forces and SAP2000 model that generates the base joint reactions). The resulting static base joint reactions are used as input into the SAP2000 foundation mat model. These joint base reactions are listed in Attachment E.

Load Designation	**Description**
F_X	X directional seismic force = Computed maximum X directional acceleration multiplied by the nodal mass.
F_Y	Y Directional seismic force = Computed maximum Y directional acceleration multiplied by the nodal mass.
F_Z	Z Directional seismic force = Computed maximum Z directional acceleration multiplied by the nodal mass.

4.3.4 SAP2000 Analysis Model:

Two SAP2000 analysis models are created to analyze the IHF concrete structure between column lines 1 to 3 and column lines 3.6 to 8 (See Attachment C for SAP2000 models and input files) utilizing the dimensional data and configuration delineated in the Initial Handling Facility General Arrangement drawings (Ref. 2.2.4 through Ref. 2.2.9).

The following methodology is applied to create SAP2000 analysis model:

a. To perform finite element analysis, both models are meshed with shell elements approximate size 5 ft long, 5 ft height or width, and wall or slab thickness as 4 ft thick.
b. The seismic loads are developed using the seismic design spectra at 7% structural damping. The analysis combines the modal responses by the 10% method and combines the North-South (X), East-West (Y), and Vertical (Z) direction spectral responses by the square root of sum of the squares (SRSS) method.
c. To represent the connection of the wall with the floor mat, the wall base nodes are modeled as fixed base supports. The step up from the foundation is not modeled, instead the base was kept at EL 0'-0" from column line 1 to 3, see assumption 3.2.1.
d. Concrete material properties delineated in Section 6.2 are utilized to perform the SAP2000 analysis.
e. Design loads and design load combinations defined in Section 6.3 are utilized.
f. Section forces and shell elements forces as discussed in Section 4.3.2.1 and 4.3.2.2 are developed for each wall and slab to derive the maximum in plane and out of plane forces and moments.
g. Analysis results required to further analyze the walls and slabs of the IHF concrete structure were tabulated in Attachment D, such as design forces, moments and response spectrum modal analysis results.

5. LIST OF ATTACHMENTS

	Number of Pages
Attachment A: Shield Plug & Port Slide Gate Loads	2
Attachment B: SAP2000 Model Sketches	10
Attachment C: SAP2000 Analysis Model of IHF Concrete Structure	1+CD
Attachment D: SAP2000 Output Forces & Moments and Results	1+CD
Attachment E: Foundation Basemat Input & Output Forces	1+CD

6. BODY OF CALCULATION

6.1 STRUCTURAL PARAMETERS

The configuration of the Initial Handling Facility for the purpose of this calculation is based on the preliminary layout as delineated in the Initial Handling Facility General Arrangement drawings (Ref. 2.2.4 through Ref. 2.2.9), see assumption 3.1.1.

6.2 MATERIAL PROPERITIES

6.2.1 Concrete and Reinforcement for ITS Structures

Section 4.2.11.6.2 of Ref 2.2.3

- Concrete f'c = 5,000 psi
- Reinforcing Steel fy = 60,000 psi

6.2.2 Structural Analysis/ Design Material Properties

Section 4.2.11.6.6 of Ref 2.2.3

- Concrete

Modulus of Elasticity	Ec = 4,290 ksi
Poisson's Ratio	$\nu = 0.17$
Density	$\gamma = 150$ pcf

- Reinforcing Steel

Modulus of Elasticity	Es =29000 ksi

6.3 DESIGN LOADS

Design loads are as follows:

6.3.1 Live Loads

6.3.1.1 Roof live Load
Roof live loads of 40 psf are applied as uniform loads on the roof slab between column lines 1 and 3 at elevation 60'-0" from Section 6.3.2 of *Initial Handling Facility (IHF): Design Loads for the Steel and Concrete Structures* (Ref. 2.2.12).

6.3.1.2 Floor Live Loads
Floor live loads of 100 psf are applied as uniform loads on the floor slab between column lines 3.6 and 8 at elevation 28'-1" and 37'-0" (Section 6.2.2 of Ref. 2.2.12).

6.3.2 Dead Loads

6.3.2.1 Roof Superimposed Dead Load
Roof superimposed dead loads of 65 psf are applied as uniform loads on the roof slab between column lines 1 and 3 at elevation 60'-0" (Section 6.3.1 of Ref. 2.2.12).

6.3.2.2 Floor Superimposed Dead Load
Floor superimposed dead loads of 50 psf are applied as uniform loads on the floor slab between column lines 3.6 and 8 at 28'-1" and 37'-0" (Section 6.2.1 of Ref. 2.2.12).

6.3.3 Snow Loads

Snow loads of 12 psf are applied as uniform loads of the roof slab between column lines 1 and 3 at elevation 60'-0" (Section 6.3.3 of Ref. 2.2.12). These loads are included in the SAP2000 model, but are not used for design since Roof Live Load governs, see assumption 3.1.5.

6.3.4 WP Handling Crane Loads

The crane travel path is in the east-west direction and between column lines 1 and 3. Figure 6.3.1 is a sketch of the WP Handling Crane, which is located on the interior side of the concrete walls. Table 6.3.1 outlines the load applications, resultant forces and moments due to crane loads, which are computed in Attachment S, Table S-2, of Ref. 2.2.12. The applied SAP2000 crane joint forces and moments include wheel impact loads in order to be conservative for Tier-1 design. These loads are applied at two positions: in between column line 2.3 & 2.7 and at column line 2.

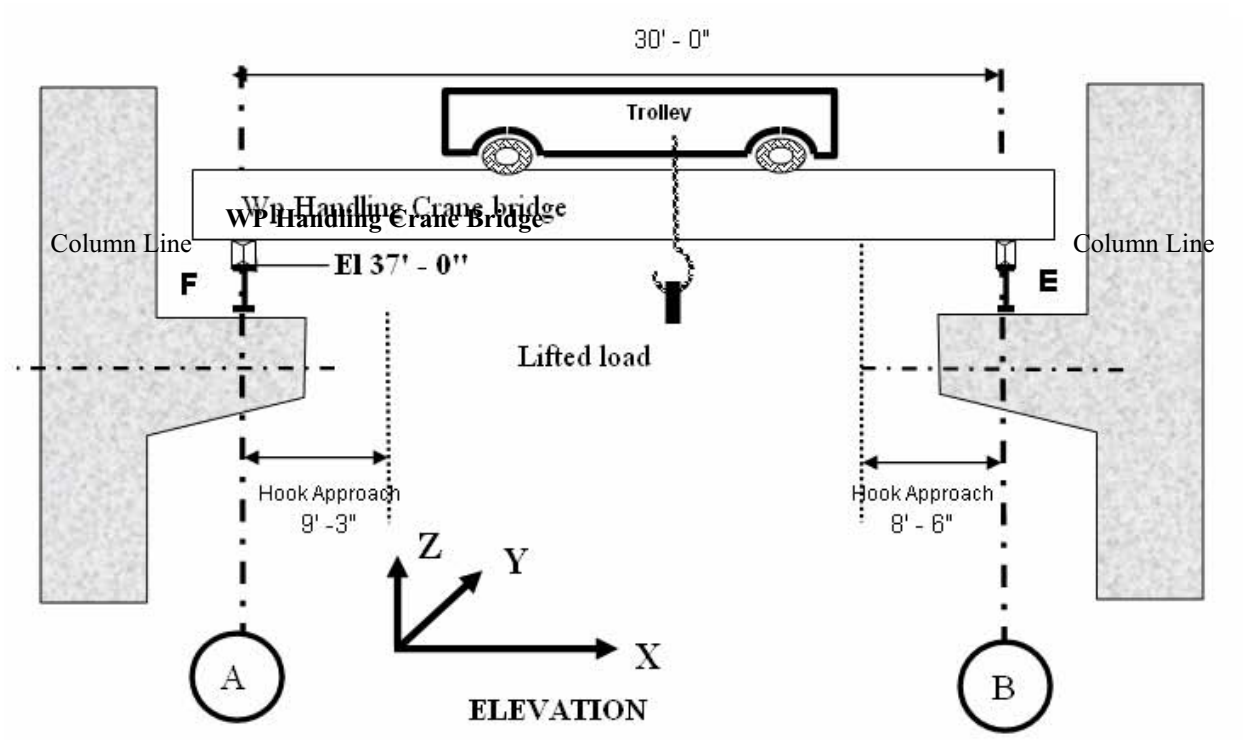

FIGURE 6.3.1: Sketch of WP Handling Crane
Source: Figure S-4 in Attachment S of Ref. 2.2.12

Table 6.3.1: Design Forces Due to WP Handling Crane
Source: Table S-2 of Attachment S of Ref. 2.2.12

Forces & Moments Applied at EL 37'-0"	At Point B		At Point A	
	Crane DL	Crane LL	Crane DL	Crane LL
Load Designator	**D-crane**	**L-crane**	**D-crane**	**L-crane**
Fx (kips)	0	-63.60	0	0
Fy (kips)	0	30.61	0	11.39
Fz (kips)	-105.88	-200.27 *-276.81	-54.12	-59.73 *-88.19
Mx (Kip-Ft)	0	45.92	0	17.08
My (Kip-Ft)	-370.56	-300.41 *-415.21	189.44	89.59 *132.29
Mz (Kip-Ft)	0	45.92	0	17.08

Note: *Crane live load values represent conservat ive forces and moments which include the effect of vertical wheel impact loads for DBGM-2 Tier-1 design.

6.3.5 Shield Plug Load

A shield plug load is applied at the floor slab at EL 37'-0" west of column line 7 as shown in Ref. 2.2.5. The load from the shield plug is applied as four concentrated loads around the recessed area on the floor slab. The design forces due to shield plug weight are computed in Attachment A, see assumption 3.1.2, and tabulated in Table 6.3.2. The following forces due to the shield plug are considered in the SAP2000 analysis.

Table 6.3.2: Design Forces Due to Shield Plug

Forces Applied at EL 37'-0"	Shield Plug
Load Designator	
Fz (kips)	14/4 = 3.5

6.3.6 Port Slide Gate Loads

Two port slide gate loads are applied at the floor slab at EL 37'-0" in between column lines 5 to 7 and 7 to 8 as shown in Ref. 2.2.5. The loads from the port slide gates are applied as four concentrated loads around the openings on the floor slab. The design forces due to port slide gate weights are computed in Attachment A, see assumption 3.1.3, and tabulated in Table 6.3.3. The following forces due to the port slide gate weights are considered in the SAP2000 analysis.

Table 6.3.3: Design Forces Due to Port Slide Gates

Forces Applied at EL 37'-0"	West Slide Port Gates between column lines 5 & 7	East Slide Port Gates between column lines 7 & 8
Load Designator		
Fz in-kips	35/4 = 8.75	35/4 = 8.75

6.3.7 Design Load Combinations

Per assumption 3.1.5, load combination DL + .25 LL + Seismic (D + .25 LL) is conservatively used as the governing load combination.

6.3.8 Torsion Effect

SAP2000 analysis resultant forces and moments from section cuts and shell elements forces are increased by 15% to account for accidental torsion effect; see assumption 3.1.4.

6.4 CONCRETE STRUCTURE DESIGN, COLUMN LINES 1 TO 3

6.4.1 Not Used

6.4.2

ROOF SLAB (48" THICK) DESIGN LOADS, COLUMN LINES 1 TO 3

Roof Slab EL 60'-0"
Accidental torsion factor= 15% (See assumption 3.1.4)

Section cut design forces and moments, which follow a global axis system, for the roof slab at EL 60'-0" from column lines 1 and 3 include inplane forces and moments: such as axial forces (tension/compression), in plane moment, and in plane shear. The section cut values are integrated along the section cut length, thus for SCUT 1 & 2 the length is equal to 132.5' and for SCUT 4 & 5 the length is equal to 37'. Out of plane values such as out of plane bending and out of plane shear are attained by shell element forces and moments from SAP2000, which follow a local axis system. The out of plane bending moments provided are M11 and M22, and a third moment M12, which is a twisting moment that is combined with M22 and M11. The out of plane shear forces from the shell elements include V13 and V23.

SCUT1 & SCUT2
F1 = Axial Force, Compression (+) / Tension (-)
F2 = In Plane Shear
M3 = In Plane Moment

SCUT3& SCUT4
F1 = In Plane Shear
F2 = Axial Force, Compression (+) / Tension (-)
M3 = In Plane Moment

Shell Element Forces and Moments
M11 = Out of Plane Moment
M22 = Out of Plane Moment
M12 = Twisting Moment
V13 = Out of Plane Shear
V23 = Out of Plane Shear

Section Cut	F1	F2	F3	M1	M2	M3	F1	F2	F3	M1	M2	M3
	Kip	Kip	Kip	Kip-ft	Kip-ft	Kip-ft	Kip	Kip	Kip	Kip-ft	Kip-ft	Kip-ft
SCUT1	319	-3	-	-	-	492	638	1089	-	-	-	17152
SCUT2	362	-2	-	-	-	911	607	418	-	-	-	15944
SCUT3	4	-55	-	-	-	7	2226	197	-	-	-	1195
SCUT4	6	42	-	-	-	-39	713	347	-	-	-	23247

MAX MIN	M11	M22	M12	V13	V23	MAX	M11	M22	M12	V13	V23
	Kip-ft/ft	Kip-ft/ft	Kip-ft/ft	Kip/ft	Kip/ft		Kip-ft/ft	Kip-ft/ft	Kip-ft/ft	Kip/ft	Kip/ft
MAX	59	21	17	12	9	MAX	113.36	34.901	17.586	10.354	6.419
MIN	-65	-37	-17	-12	-8						

Loads with accidental torsion factor

Section Cut	F1	F2	F3	M1	M2	M3	F1	F2	F3	M1	M2	M3
	Kip	Kip	Kip	Kip-ft	Kip-ft	Kip-ft	Kip	Kip	Kip	Kip-ft	Kip-ft	Kip-ft
SCUT1	367	-3	-	-	-	566	734	1253	-	-	-	19725
SCUT2	416	-3	-	-	-	1048	698	480	-	-	-	18336
SCUT3	4	-63	-	-	-	8	2560	226	-	-	-	1374
SCUT4	7	49	-	-	-	-45	820	399	-	-	-	26734

MAX MIN	M11	M22	M12	V13	V23	MAX	M11	M22	M12	V13	V23
	Kip-ft/ft	Kip-ft/ft	Kip-ft/ft	Kip/ft	Kip/ft		Kip-ft/ft	Kip-ft/ft	Kip-ft/ft	Kip/ft	Kip/ft
MAX	68	25	19	13	10	MAX	130.37	40.136	20.223	11.907	7.3819
MIN	-74	-43	-19	-13	-10						

Loads with accidental torsion factor

Maximum Load Combination

Section Cut	F1	F2	F3	M1	M2	M3	F1	F2	F3	M1	M2	M3
	Kip	Kip	Kip	Kip-ft	Kip-ft	Kip-ft	Kip	Kip	Kip	Kip-ft	Kip-ft	Kip-ft
SCUT1	1101	1250	-	-	-	20291	-366	-1256	-	-	-	-19159
SCUT2	1114	478	-	-	-	19383	-282	-483	-	-	-	-17288
SCUT3	2565	164	-	-	-	1382	-2556	-289	-	-	-	-1366
SCUT4	828	448	-	-	-	26689	-813	-351	-	-	-	-26779

MAX MIN	M11	M22	M12	V13	V23	MAX MIN	M11	M22	M12	V13	V23
	Kip-ft/ft	Kip-ft/ft	Kip-ft/ft	Kip/ft	Kip/ft		Kip-ft/ft	Kip-ft/ft	Kip-ft/ft	Kip/ft	Kip/ft
MAX	198	65	39	25	17	MAX	-63	-15	-1	1	2
MIN	56	-3	1	-1	-2	MIN	-205	-83	-39	-25	-17

Maximum Load Combination

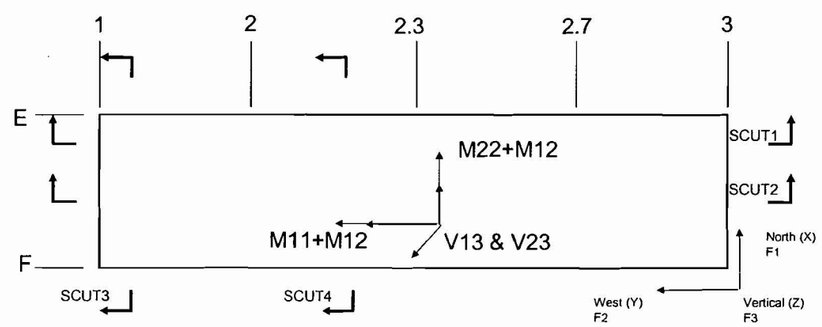

ROOF AT ELEV. 60'-0" ---- PLAN

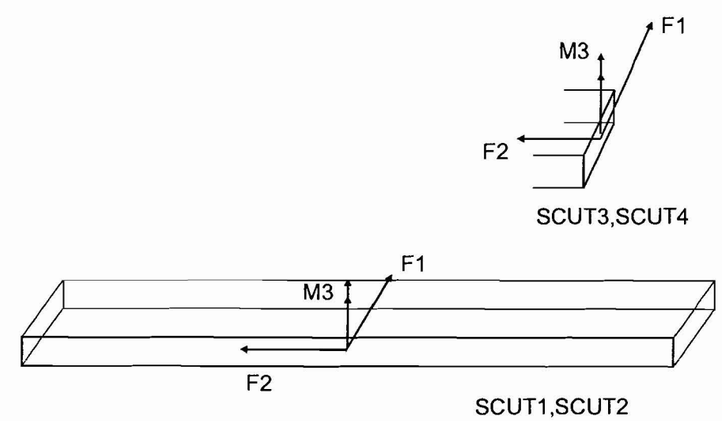

6.4.2.1 Roof Slab Design (48" thick), N-S Reinforcement

$f'_c := 5000 \cdot psi$ $f_y := 60 \cdot ksi$

$\phi_b := 0.9$ Sect. 9.3.2.1, Ref. 2.2.14

$\phi_t := 0.9$ Sect. 9.3.2.2(a), Ref. 2.2.14

$\phi_c := 0.7$ Sect. 9.3.2.2(b), Ref. 2.2.14

$\phi_v := 0.6$ Sect. 9.3.4, Ref. 2.2.14

6.4.2.1.1 SCUT1 slab width: $B := 132.5 \cdot ft$

Load Combination I - DL+LL+SRSS

Axial Compression:	**F1 = 1101 kip (C)**
In-Plane Moment:	**M3 = 20291 kip-ft**
In-Plane Shear:	**F2 = 1250 kip**
Out-of-Plane Moment:	**M11 + M12 = 237 kip-ft/ft**
Out-of-Plane Shear:	**V13 = 25 kip/ft**

I-A Out-of-Plane Moment with Axial Compression

M11 + M12 = 237 kip-ft/ft **F1 = 1101 kip (C)**

$M_{uo} := 237 \cdot \frac{kip \cdot ft}{ft}$ $N_u := \frac{1101 \cdot kip}{B}$ $N_u = 8.309 \frac{kip}{ft}$

$b := 12 \cdot in$ $h := 48 \cdot in$ conc. cover for reinf.: $t_c := 2 \cdot in$

$d_{b11} := 1.41 \cdot in$ $d := h - t_c - d_{b11} \cdot 1.5$ (2nd layer) $d = 43.885\ in$

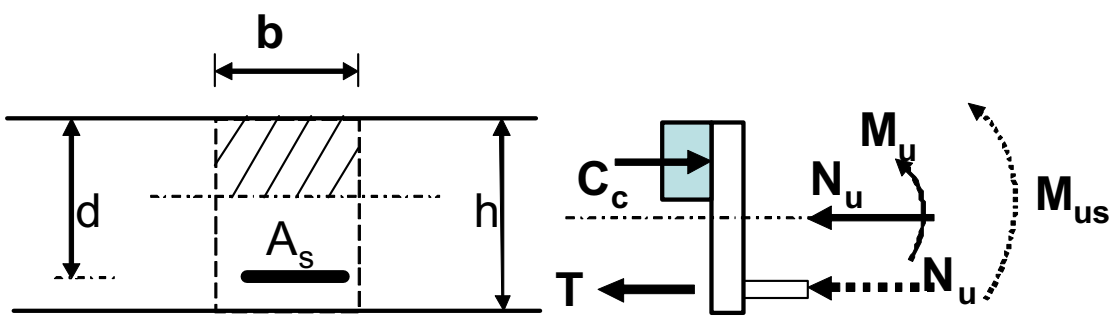

$M_{us} := M_{uo} + N_u \cdot \left(d - \frac{h}{2}\right)$ (Commentary, Ref. 2.2.18) $M_{us} = 250.769\ kip \cdot \frac{ft}{ft}$

$m := \frac{f_y}{0.85 \cdot f'_c}$ (Eq. 3.8.4a, Ref. 2.2.20,) $m = 14.118$

$M_n := \frac{M_{us} \cdot b}{\phi_c}$ $M_n = 358.242\ kip \cdot ft$ $R_n := \frac{M_n}{b \cdot d^2}$ (Eq. 3.8.4b, Ref. 2.2.20,) $R_n = 186.013\ psi$

$\rho := \frac{1}{m} \cdot \left(1 - \sqrt{1 - \frac{2 \cdot m \cdot R_n}{f_y}}\right)$ (Eq. 3.8.5, Ref. 2.2.20,) $\rho = 3.171 \times 10^{-3}$

$A_s := \rho \cdot b \cdot d - \frac{N_u \cdot b}{\phi_c \cdot f_y}$ (Commentary, Ref. 2.2.18) $A_s = 1.472\ in^2$

$A_{s\_min} := 0.0018 \cdot b \cdot h$ (Sect. 7.12.5, Ref. 2.2.14) $A_{s\_min} = 1.037\ in^2$

To count for D/C ratio (Demand/Capacity) = 0.6

$A_{s\_req} := \frac{A_s}{0.6}$ $A_{s\_req} = 2.454\ in^2$ try #11@7.5", As = 2.50 sq. in. O K

I-B Check Out-of-Plane Shear Capacity

Full Shear Capacity (neglect compression--- conservative)

$b = 12\ in$ $d = 43.885\ in$

$V_c := 2 \cdot \sqrt{f'_c \cdot psi} \cdot b \cdot d$ (Eq. 11-3, Ref. 2.2.14,) $V_c = 74.475\ kip$

$\phi_v \cdot V_c = 44.685\ kip$

Out-of-Plane Shear: **V13 = 25 kip/ft**

$V_{uo} := 25 \cdot \frac{kip}{ft}$ $\frac{V_{uo} \cdot b}{\phi_v \cdot V_c} = 0.559$ < D/C = 0.6 O K

I-C Chord Reinf. at slab edge (east and west) due to In-Plane Moment

M3 = 20291 kip-ft **F1 = 1101 kip (C)**

$M_{ui} := 20291 \cdot kip \cdot ft$ $N_u := 1101 \cdot kip$ $b := 4 \cdot ft$ $h := 132.5 \cdot ft$ $d := h - 5 \cdot in$

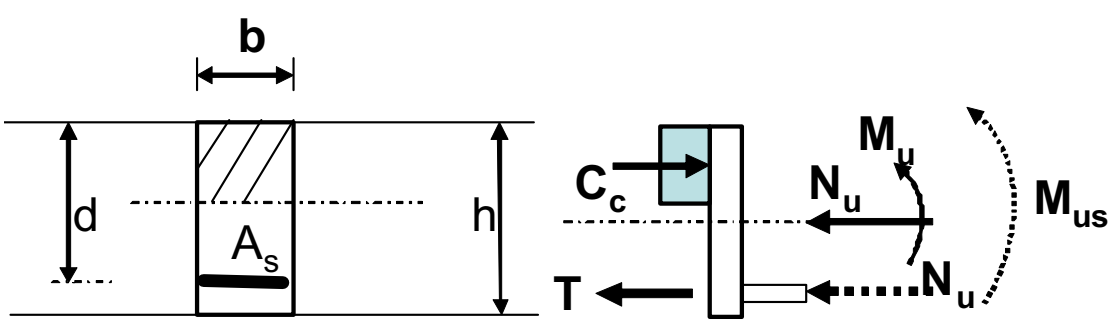

$M_{us} := M_{ui} + N_u \cdot \left(d - \frac{h}{2}\right)$ (Commentary, Ref. 2.2.18) $M_{us} = 9.277 \times 10^4\ kip \cdot ft$

$m := \frac{f_y}{0.85 \cdot f'_c}$ (Eq. 3.8.4a, Ref. 2.2.20,) $m = 14.118$

$M_n := \frac{M_{us}}{\phi_c}$ $M_n = 1.325 \times 10^5\ kip \cdot ft$ $R_n := \frac{M_n}{b \cdot d^2}$ (Eq. 3.8.4b, Ref. 2.2.20,) $R_n = 13.189\ psi$

$\rho := \frac{1}{m}\cdot\left(1 - \sqrt{1 - \frac{2\cdot m\cdot R_n}{f_y}}\right)$ (Eq. 3.8.5, Ref. 2.2.20,) $\rho = 2.202 \times 10^{-4}$

$A_s := \rho\cdot b\cdot d - \frac{N_u}{\phi_c\cdot f_y}$ (Commentary, Ref. 2.2.18) $A_s = -9.465\ in^2$ (tension reinf. not required----O K)

I-D Check In-Plane Shear Capacity **F2 = 1250 kip**

$V_{ui} := 1250\cdot kip$ $b := 4\cdot ft$ $h = 132.5\ ft$ $A_g := b\cdot h$ $d := h - 5\cdot in$

$V_c := 2\cdot\sqrt{f'_c\cdot psi}\cdot b\cdot d$ (Eq. 11-3, Ref. 2.2.14,) $V_c = 1.076 \times 10^4\ kip$

$\frac{V_{ui}}{\phi_v\cdot V_c} = 0.194$ < D/C = 0.6 O K

Load Combination II - DL+LL-SRSS

Axial Tension:	**F1 = -366 kip (T)**
In-Plane Moment:	**M3 = -19159 kip-ft**
In-Plane Shear:	**F2 = -1256 kip**
Out-of-Plane Moment:	**M11 + M12 = -244 kip-ft/ft**
Out-of-Plane Shear:	**V13 = -25 kip/ft**

II-A Out-of-Plane Moment with Axial Tension slab width: $B := 132.5\cdot ft$

M11 + M12 = -244 kip-ft/ft **F1 = -366 kip (T)**

$M_{uo} := 244\cdot\frac{kip\cdot ft}{ft}$ $N_u := \frac{366\cdot kip}{B}$ $N_u = 2.762\ \frac{kip}{ft}$

$b := 12\cdot in$ $h := 48\cdot in$ conc. cover for reinf.: $t_c := 2\cdot in$

$d_{b11} := 1.41\cdot in$ $d := h - t_c - d_{b11}\cdot 1.5$ (2nd layer) $d = 43.885\ in$

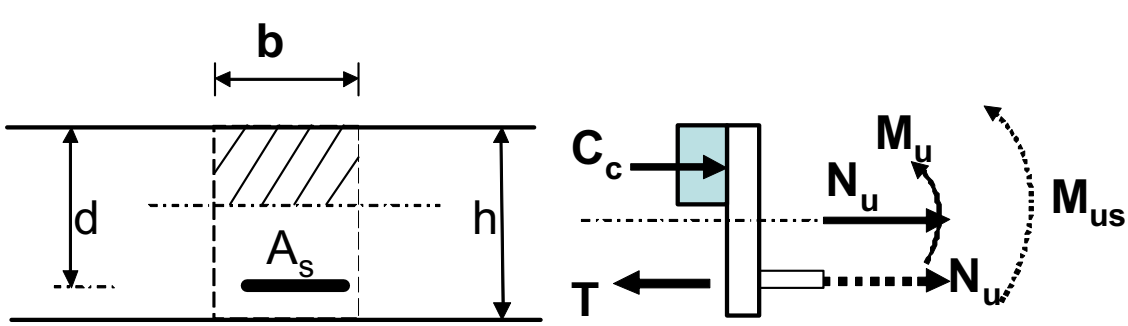

$M_{us} := M_{uo} - N_u \cdot \left(d - \frac{h}{2}\right)$ (Commentary, Ref. 2.2.18) $M_{us} = 239.423\ kip \cdot \frac{ft}{ft}$

$m := \frac{f_y}{0.85 \cdot f'_c}$ (Eq. 3.8.4a, Ref. 2.2.20,) $m = 14.118$

$M_n := \frac{M_{us} \cdot b}{\phi_t}$ $M_n = 266.025\ kip \cdot ft$ $R_n := \frac{M_n}{b \cdot d^2}$ (Eq. 3.8.4b, Ref. 2.2.20,) $R_n = 138.131\ psi$

$\rho := \frac{1}{m} \cdot \left(1 - \sqrt{1 - \frac{2 \cdot m \cdot R_n}{f_y}}\right)$ (Eq. 3.8.5, Ref. 2.2.20,) $\rho = 2.341 \times 10^{-3}$

$A_s := \rho \cdot b \cdot d + \frac{N_u \cdot b}{\phi_t \cdot f_y}$ (Commentary, Ref. 2.2.18) $A_s = 1.284\ in^2$

$A_{s\_min} := 0.0018 \cdot b \cdot h$ (Sect. 7.12.5, Ref. 2.2.14) $A_{s\_min} = 1.037\ in^2$

To count for D/C ratio (Demand/Capacity) = 0.6

$A_{s\_req} := \frac{A_s}{0.6}$ $A_{s\_req} = 2.14\ in^2$

II-B Check Out-of-Plane Shear Capacity **V13 = -25 kip/ft**

Shear Capacity with axial tension **F1 =-366 kip (T)**

$A_g := b \cdot h$ $h = 48\ in$ $A_g = 576\ in^2$ $N_u := \frac{-366 \cdot kip}{B}$ $N_u = -2.762\ \frac{kip}{ft}$

$V_c := 2 \cdot \left(1 + \frac{N_u \cdot b}{500 \cdot A_g \cdot psi}\right) \cdot \sqrt{f'_c \cdot psi} \cdot b \cdot d$ (Eq. 11-8, Ref. 2.2.14,) $V_c = 73.761\ kip$

$V_{uo} := 25 \cdot \frac{kip}{ft}$ $\frac{V_{uo} \cdot b}{\phi_v \cdot V_c} = 0.565$ < D/C = 0.6 O K

II-C Chord Reinf. at slab edge (east and west) due to In-Plane Moment

M3 = -19159 kip-ft **F1 = -366 kip (T)**

$M_{ui} := 19159 \cdot kip \cdot ft$ $N_u := 366 \cdot kip$ $b := 4 \cdot ft$ $h := 132.5 \cdot ft$ $d := h - 5 \cdot in$

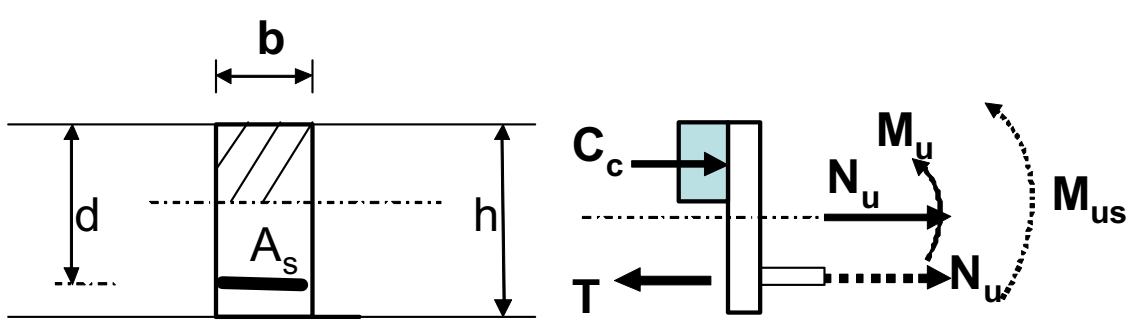

$M_{us} := M_{ui} - N_u \cdot \left(d - \frac{h}{2}\right)$ (Commentary, Ref. 2.2.18) $M_{us} = -4.936 \times 10^3 \, kip \cdot ft$

Axial tension Nu is large compared to moment, redesign entire section in tension

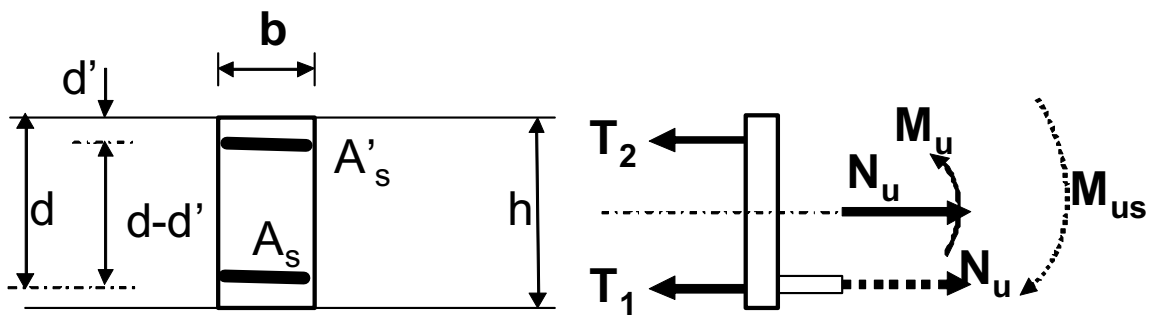

$d' := 5 \cdot in$ $A'_s := \frac{|M_{us}|}{\phi_b \cdot f_y \cdot (d - d')}$ (Commentary, Ref. 2.2.18) $A'_s = 0.694 \, in^2$

$A_s := \frac{N_u}{\phi_t \cdot f_y} - A'_s$ (Commentary, Ref. 2.2.18) $A_s = 6.084 \, in^2$

To count for D/C ratio (Demand/Capacity) = 0.6

$A_{s\_req\_ns} := \frac{A_s}{0.6}$ $A_{s\_req\_ns} = 10.139 \, in^2$ try 7#11 (N-S), As = 10.92 sq. in. O K

<u>II-D Check In-Plane Shear Capacity</u> **F2 = -1256 kip** **F1 =-366 kip (T)**

$V_{ui} := 1256 \cdot kip$ $N_u := -366 \cdot kip$ $b := 4 \cdot ft$ $h = 132.5 \, ft$ $A_g := b \cdot h$ $d := h - 5 \cdot in$

$V_c := 2 \cdot \left(1 + \frac{N_u}{500 \cdot A_g \cdot psi}\right) \cdot \sqrt{f'_c \cdot psi} \cdot b \cdot d$ (Eq. 11-8, Ref. 2.2.14,) $V_c = 1.066 \times 10^4 \, kip$

$\frac{V_{ui}}{\phi_v \cdot V_c} = 0.196$ < D/C = 0.6 O K

6.4.2.1.2 SCUT2 slab width: $B := 132.5 \cdot ft$

Load Combination I - DL+LL+SRSS

Axial Compression:	**F1 = 1114 kip (C)**
In-Plane Moment:	**M3 = 19383 kip-ft**
In-Plane Shear:	**F2 = 478 kip**
Out-of-Plane Moment:	**M11 + M12 = 237 kip-ft/ft**
Out-of-Plane Shear:	**V13 = 25 kip/ft**

compared with SCUT1, Loads at SCUT2 are smaller (except F1, but difference is negligible), use same design as SCUT1.

Load Combination II - DL+LL-SRSS

Axial Tension:	**F1 = -282 kip (T)**
In-Plane Moment:	**M3 = -17288 kip-ft**
In-Plane Shear:	**F2 = -483 kip**
Out-of-Plane Moment:	**M11 + M12 = -244 kip-ft/ft**
Out-of-Plane Shear:	**V13 = -25 kip/ft**

compared with SCUT1, Loads at SCUT2 are smaller, use same design as SCUT1.

6.4.2.2 Roof Slab Design (48" thick), E-W Reinforcement

6.4.2.2.1 SCUT3 slab width: $B := 37 \cdot ft$

Load Combination I - DL+LL+SRSS

Axial Compression: **F2 = 164 kip (C)**

In-Plane Moment: **M3 = 1382 kip-ft**

In-Plane Shear: **F1 = 2565 kip**

Out-of-Plane Moment: **M22 + M12 =104 kip-ft/ft**

Out-of-Plane Shear: **V13 = 25 kip/ft**

I-A Out-of-Plane Moment with Axial Compression

M22 + M12 =104 kip-ft/ft **F2 = 164 kip (C)**

$M_{uo} := 104 \cdot \frac{kip \cdot ft}{ft}$ $N_u := \frac{164 \cdot kip}{B}$ $N_u = 4.432 \frac{kip}{ft}$

$b := 12 \cdot in$ $h := 48 \cdot in$ conc. cover for reinf.: $t_c := 2 \cdot in$

$d_{b11} := 1.41 \cdot in$ $d := h - t_c - d_{b11} \cdot 1.5$ (2nd layer) $d = 43.885\, in$

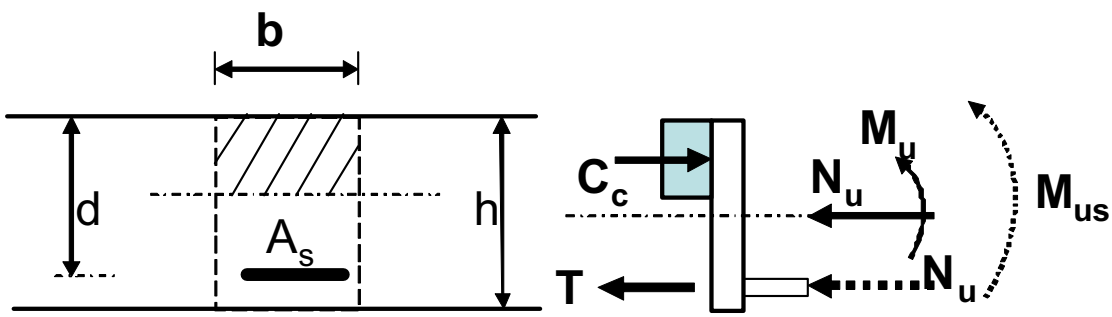

$M_{us} := M_{uo} + N_u \cdot \left(d - \frac{h}{2}\right)$ (Commentary, Ref. 2.2.18) $M_{us} = 111.345\, kip \cdot \frac{ft}{ft}$

$m := \frac{f_y}{0.85 \cdot f'_c}$ (Eq. 3.8.4a, Ref. 2.2.20,) $m = 14.118$

$M_n := \frac{M_{us} \cdot b}{\phi_c}$ $M_n = 159.064\, kip \cdot ft$ $R_n := \frac{M_n}{b \cdot d^2}$ (Eq. 3.8.4b, Ref. 2.2.20,) $R_n = 82.592\, psi$

$\rho := \frac{1}{m} \cdot \left(1 - \sqrt{1 - \frac{2 \cdot m \cdot R_n}{f_y}}\right)$ (Eq. 3.8.5, Ref. 2.2.20,) $\rho = 1.39 \times 10^{-3}$

$A_s := \rho \cdot b \cdot d - \frac{N_u \cdot b}{\phi_c \cdot f_y}$ (Commentary, Ref. 2.2.18) $A_s = 0.627\, in^2$

$A_{s\_min} := 0.0018 \cdot b \cdot h$ (Sect. 7.12.5, Ref. 2.2.14) $A_{s\_min} = 1.037\ in^2$

To count for D/C ratio (Demand/Capacity) = 0.6

$A_{s\_req} := \frac{A_s}{0.6}$ $A_{s\_req} = 1.044\ in^2$ try #9@12", As = 1.00 sq. in. O K

I-B Check Out-of-Plane Shear Capacity **V13 = 25 kip/ft** same as SCUT1 O K

I-C Chord Reinf. at slab edge (north and south) due to In-Plane Moment

M3 = 1382 kip-ft **F2 = 164 kip (C)**

$M_{ui} := 1382 \cdot kip \cdot ft$ $N_u := 164 \cdot kip$ $b := 4 \cdot ft$ $h := 37 \cdot ft$ $d := h - 5 \cdot in$

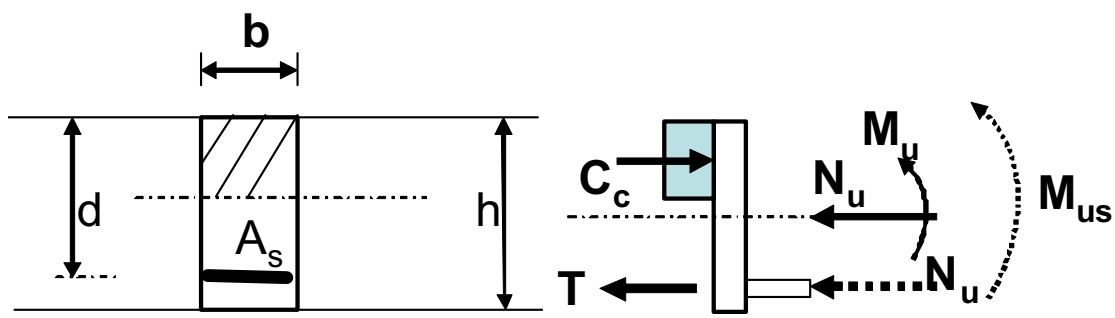

$M_{us} := M_{ui} + N_u \cdot \left(d - \frac{h}{2}\right)$ (Commentary, Ref. 2.2.18) $M_{us} = 4.348 \times 10^3\ kip \cdot ft$

$m := \frac{f_y}{0.85 \cdot f'_c}$ (Eq. 3.8.4a, Ref. 2.2.20,) $m = 14.118$

$M_n := \frac{M_{us}}{\phi_c}$ $M_n = 6.211 \times 10^3\ kip \cdot ft$ $R_n := \frac{M_n}{b \cdot d^2}$ (Eq. 3.8.4b, Ref. 2.2.20,) $R_n = 8.057\ psi$

$\rho := \frac{1}{m} \cdot \left(1 - \sqrt{1 - \frac{2 \cdot m \cdot R_n}{f_y}}\right)$ (Eq. 3.8.5, Ref. 2.2.20,) $\rho = 1.344 \times 10^{-4}$

$A_s := \rho \cdot b \cdot d - \frac{N_u}{\phi_c \cdot f_y}$ (Commentary, Ref. 2.2.18) $A_s = -1.072\ in^2$ (tension reinf. not required----O K)

I-D Check In-Plane Shear Capacity **F1 = -2565 kip**

$V_{ui} := 2565 \cdot kip$ $b := 4 \cdot ft$ $h = 37\ ft$ $A_g := b \cdot h$ $d := h - 5 \cdot in$

$V_c := 2 \cdot \sqrt{f'_c \cdot psi} \cdot b \cdot d$ (Eq. 11-3, Ref. 2.2.14,) $V_c = 2.98 \times 10^3\ kip$

$\frac{V_{ui}}{\phi_v \cdot V_c} = 1.435$ > D/C = 0.6 N G design shear reinf.for slab similar to wall panel

provide #11@12" (E-W) Top and Bottom: $A_{s11} := 1.56 \cdot in^2$ $s_2 := 12 \cdot in$

Reinf. required for Out-of-Plane Moment: $A_{s\_opm} := 0.627 \cdot \frac{in^2}{ft}$

$A_v := 2 \cdot A_{s11} - A_{s\_opm} \cdot s_2$ $A_v = 2.493\ in^2$

$l_w := 37 \cdot ft$ $d := 0.8 \cdot l_w$ (Section 11.10.4, Ref. 2.2.14)

$V_s := \frac{A_v \cdot f_y \cdot d}{s_2}$ (Eq. 11-33, Ref. 2.2.14) $V_s = 4.428 \times 10^3\ kip$

$\frac{V_{ui}}{\phi_v \cdot (V_c + V_s)} = 0.577$ < D/C = 0.6 O K

Load Combination II - DL+LL-SRSS

Axial Tension: **F2 =-289 kip (T)**

In-Plane Moment: **M3 = -1366 kip-ft**

In-Plane Shear: **F1 = -2556 kip**

Out-of-Plane Moment: **M22 + M12 = -122 kip-ft/ft**

Out-of-Plane Shear: **V13 = -25 kip/ft**

II-A Out-of-Plane Moment with Axial Tension slab width: $B := 37 \cdot ft$

M22 + M12 = -122 kip-ft/ft **F2 = -289 kip (T)**

$M_{uo} := 122 \cdot \frac{kip \cdot ft}{ft}$ $N_u := \frac{289 \cdot kip}{B}$ $N_u = 7.811\ \frac{kip}{ft}$

$b := 12 \cdot in$ $h := 48 \cdot in$ conc. cover for reinf.: $t_c := 2 \cdot in$

$d_{b11} := 1.41 \cdot in$ $d := h - t_c - d_{b11} \cdot 1.5$ (2nd layer) $d = 43.885\ in$

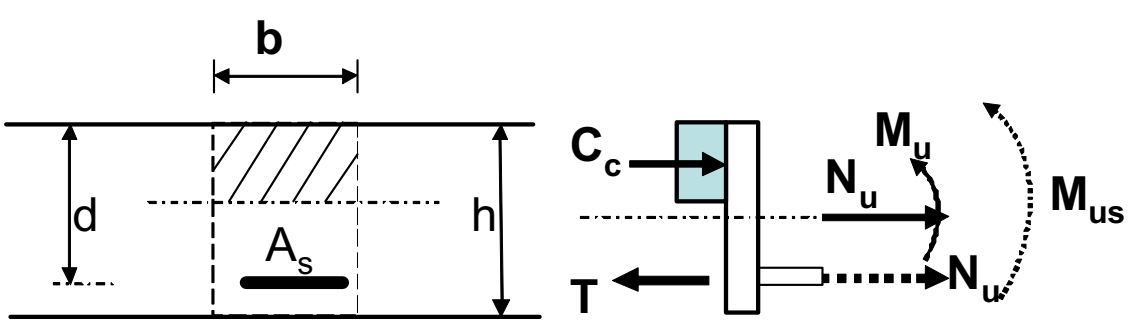

$M_{us} := M_{uo} - N_u \cdot \left(d - \frac{h}{2}\right)$ (Commentary, Ref. 2.2.18) $M_{us} = 109.057\,kip \cdot \frac{ft}{ft}$

$m := \frac{f_y}{0.85 \cdot f'_c}$ (Eq. 3.8.4a, Ref. 2.2.20,) $m = 14.118$

$M_n := \frac{M_{us} \cdot b}{\phi_t}$ $M_n = 121.174\,kip \cdot ft$ $R_n := \frac{M_n}{b \cdot d^2}$ (Eq. 3.8.4b, Ref. 2.2.20,) $R_n = 62.918\,psi$

$\rho := \frac{1}{m} \cdot \left(1 - \sqrt{1 - \frac{2 \cdot m \cdot R_n}{f_y}}\right)$ (Eq. 3.8.5, Ref. 2.2.20,) $\rho = 1.057 \times 10^{-3}$

$A_s := (\rho \cdot b \cdot d) + \frac{N_u \cdot b}{\phi_t \cdot f_y}$ (Commentary, Ref. 2.2.18) $A_s = 0.701\,in^2$

$A_{s\_min} := 0.0018 \cdot b \cdot h$ (Sect. 7.12.5, Ref. 2.2.14) $A_{s\_min} = 1.037\,in^2$

To count for D/C ratio (Demand/Capacity) = 0.6

$A_{s\_req} := \frac{A_s}{0.6}$ $A_{s\_req} = 1.168\,in^2$ try #9@10", As = 1.20 sq. in. O K

<u>II-B Check Out-of-Plane Shear Capacity</u> **V13 = -25 kip/ft**

Shear Capacity with axial tension **F2 = -289 kip (T)**

$A_g := b \cdot h$ $h = 48\,in$ $A_g = 576\,in^2$ $N_u := \frac{-289 \cdot kip}{B}$

$V_c := 2 \cdot \left(1 + \frac{N_u \cdot b}{500 \cdot A_g \cdot psi}\right) \cdot \sqrt{f'_c \cdot psi} \cdot b \cdot d$ (Eq. 11-8, Ref. 2.2.14,) $V_c = 72.455\,kip$

$V_{uo} := 25 \cdot \frac{kip}{ft}$ $\frac{(V_{uo}) \cdot b}{\phi_v \cdot V_c} = 0.575$ < D/C = 0.6 O K

II-C Chord Reinf. at slab edge (east and west) due to In-Plane Moment

M3 = -1366 kip-ft **F2 = -289 kip (T)**

$M_{ui} := 1366 \cdot kip \cdot ft$ $N_u := 289 \cdot kip$ $b := 4 \cdot ft$ $h := 37 \cdot ft$ $d := h - 5 \cdot in$

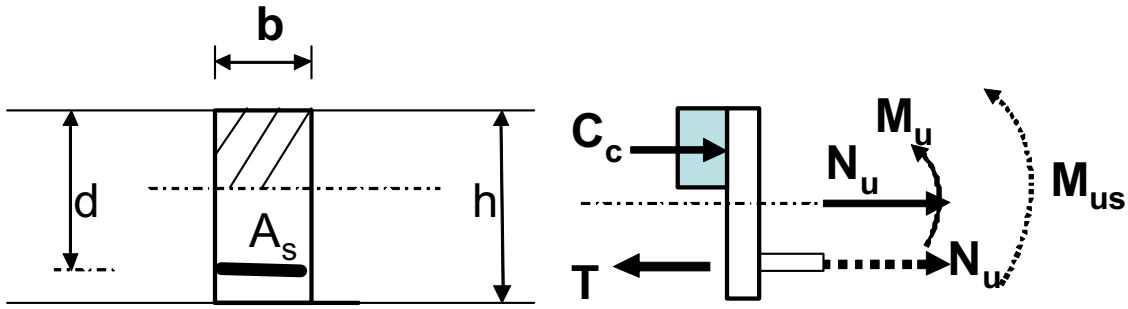

$M_{us} := M_{ui} - N_u \cdot \left(d - \frac{h}{2}\right)$ (Commentary, Ref. 2.2.18) $M_{us} = -3.86 \times 10^3 \, kip \cdot ft$

Axial tension Nu is large compared to moment, redesign entire section in tension

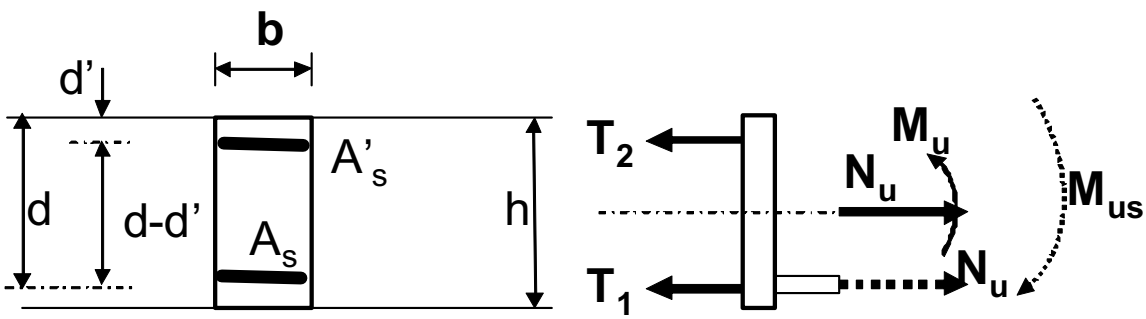

$d' := 5 \cdot in$ $A'_s := \frac{|M_{us}|}{\phi_b \cdot f_y \cdot (d - d')}$ (Commentary, Ref. 2.2.18) $A'_s = 1.976 \, in^2$

$A_s := \frac{N_u}{\phi_b \cdot f_y} - A'_s$ (Commentary, Ref. 2.2.18) $A_s = 3.375 \, in^2$

To count for D/C ratio (Demand/Capacity) = 0.6

$A_{s\_req\_ew} := \frac{A_s}{0.6}$ $A_{s\_req\_ew} = 5.626 \, in^2$ try4#11 (E-W), As = 6.24 sq. in. O K

II-D Check In-Plane Shear Capacity **F1 = -2556 kip**

$V_{ui} := 2556 \cdot kip$

$b := 4 \cdot ft$ $h = 37 \, ft$ $A_g := b \cdot h$ $d := h - 5 \cdot in$

Shear Capacity with axial tension **F2 = -289 kip (T)**

$A_g := b \cdot h$ $h = 444\,in$ $A_g = 2.131 \times 10^4\,in^2$ $N_u := -289 \cdot kip$

$V_c := 2 \cdot \left(1 + \frac{N_u}{500 \cdot A_g \cdot psi}\right) \cdot \sqrt{f'_c \cdot psi} \cdot b \cdot d$ (Eq. 11-8, Ref. 2.2.14,) $V_c = 2.899 \times 10^3\,kip$

$\frac{V_{ui}}{\phi_v \cdot V_c} = 1.469$ > D/C = 0.6 N G design shear reinf. for slab similar to wall panel

provide #11@12" Top and Bottom: $A_{s11} := 1.56 \cdot in^2$ $s_2 := 12 \cdot in$

Reinf. required for Out-of-Plane Moment: $A_{s\_opm} := 0.701 \cdot \frac{in^2}{ft}$

$A_v := 2 \cdot A_{s11} - A_{s\_opm} \cdot s_2$ $A_v = 2.419\,in^2$

$l_w := 37 \cdot ft$ $d := 0.8 \cdot l_w$ (Section 11.10.4, Ref. 2.2.14)

$V_s := \frac{A_v \cdot f_y \cdot d}{s_2}$ (Eq. 11-33, Ref. 2.2.14) $V_s = 4.296 \times 10^3\,kip$

$\frac{V_{ui}}{\phi_v \cdot (V_c + V_s)} = 0.592$ < D/C = 0.6 O K

6.4.2.2.2 SCUT4 slab width: $B := 37 \cdot ft$

Load Combination I - DL+LL+SRSS

Axial Compression: **F2 = 448 kip (C)**

In-Plane Moment: **M3 = 26689 kip-ft**

In-Plane Shear: **F1 = 828 kip**

Out-of-Plane Moment: **M22 + M12 =104 kip-ft/ft**

Out-of-Plane Shear: **V13 = 25 kip/ft**

I-A Out-of-Plane Moment with Axial Compression

M22 + M12 =104 kip-ft/ft **F2 = 448 kip (C)**

$M_{uo} := 104 \cdot \frac{kip \cdot ft}{ft}$ $N_u := \frac{448 \cdot kip}{B}$ $N_u = 12.108 \frac{kip}{ft}$

$b := 12 \cdot in$ $h := 48 \cdot in$ conc. cover for reinf.: $t_c := 2 \cdot in$

$d_{b11} := 1.41 \cdot in$ $d := h - t_c - d_{b11} \cdot 1.5$ (2nd layer) $d = 43.885\ in$

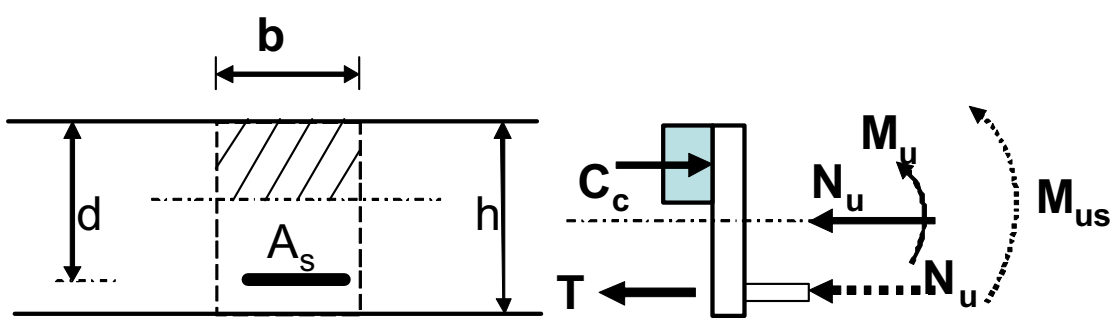

$M_{us} := M_{uo} + N_u \cdot \left(d - \frac{h}{2}\right)$ (Commentary, Ref. 2.2.18) $M_{us} = 124.064\ kip \cdot \frac{ft}{ft}$

$m := \frac{f_y}{0.85 \cdot f'_c}$ (Eq. 3.8.4a, Ref. 2.2.20,) $m = 14.118$

$M_n := \frac{M_{us} \cdot b}{\phi_c}$ $M_n = 177.234\ kip \cdot ft$ $R_n := \frac{M_n}{b \cdot d^2}$ (Eq. 3.8.4b, Ref. 2.2.20,) $R_n = 92.027\ psi$

$\rho := \frac{1}{m} \cdot \left(1 - \sqrt{1 - \frac{2 \cdot m \cdot R_n}{f_y}}\right)$ (Eq. 3.8.5, Ref. 2.2.20,) $\rho = 1.551 \times 10^{-3}$

$A_s := \rho \cdot b \cdot d - \frac{N_u \cdot b}{\phi_c \cdot f_y}$ (Commentary, Ref. 2.2.18) $A_s = 0.528\ in^2$

$A_{s\_min} := 0.0018 \cdot b \cdot h$ (Sect. 7.12.5, Ref. 2.2.14) $A_{s\_min} = 1.037\ in^2$

To count for D/C ratio (Demand/Capacity) = 0.6

$A_{s\_req} := \frac{A_s}{0.6}$ $A_{s\_req} = 0.881\ in^2$ try #9@12", As = 1.00 sq. in. O K

I-B Check Out-of-Plane Shear Capacity **V13 = 25 kip/ft** same as SCUT1 O K

I-C Chord Reinf. at slab edge (east and west) due to In-Plane Moment

M3 = 26689 kip-ft **F2 = 448 kip (C)**

$M_{ui} := 26689 \cdot kip \cdot ft$ $N_u := 448 \cdot kip$ $b := 4 \cdot ft$ $h := 37 \cdot ft$ $d := h - 5 \cdot in$

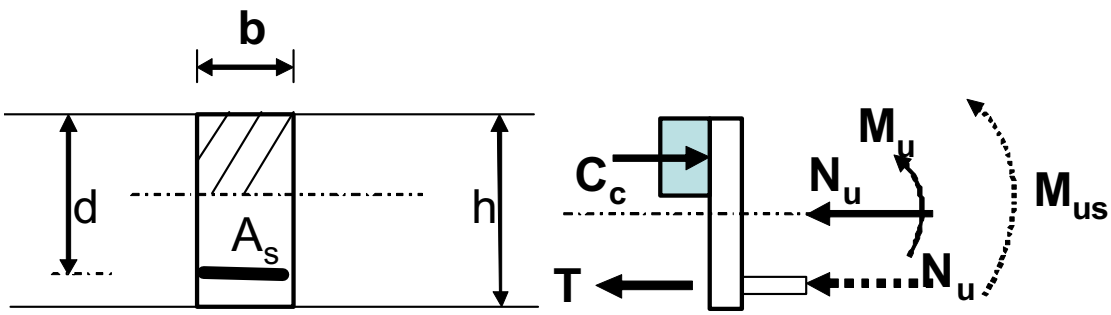

$M_{us} := M_{ui} + N_u \cdot \left(d - \frac{h}{2}\right)$ (Commentary, Ref. 2.2.18) $M_{us} = 3.479 \times 10^4\ kip \cdot ft$

$m := \frac{f_y}{0.85 \cdot f'_c}$ (Eq. 3.8.4a, Ref. 2.2.20,) $m = 14.118$

$M_n := \frac{M_{us}}{\phi_c}$ $M_n = 4.97 \times 10^4\ kip \cdot ft$ $R_n := \frac{M_n}{b \cdot d^2}$ (Eq. 3.8.4b, Ref. 2.2.20,) $R_n = 64.472\ psi$

$\rho := \frac{1}{m} \cdot \left(1 - \sqrt{1 - \frac{2 \cdot m \cdot R_n}{f_y}}\right)$ (Eq. 3.8.5, Ref. 2.2.20,) $\rho = 1.083 \times 10^{-3}$

$A_s := \rho \cdot b \cdot d - \frac{N_u}{\phi_c \cdot f_y}$ (Commentary, Ref. 2.2.18) $A_s = 12.15\ in^2$

try 8 #11 (E-W), As =12.48 in^2 O K

I-D Check In-Plane Shear Capacity **F1 = 828 kip**

Compared with SCUT3, Shear at SCUT4 is smaller, use same design as SCUT3.

Load Combination II - DL+LL-SRSS

Axial Tension:	**F2 =-351 kip (T)**
In-Plane Moment:	**M3 = -26779 kip-ft**
In-Plane Shear:	**F1 = -813 kip**
Out-of-Plane Moment:	**M22 + M12 = -122 kip-ft/ft**
Out-of-Plane Shear:	**V13 = -25 kip/ft**

II-A Out-of-Plane Moment with Axial Tension

M22 + M12 = -122 kip-ft/ft **F2 = -351 kip (T)**

$M_{uo} := 122 \cdot \frac{kip \cdot ft}{ft}$ $N_u := \frac{351 \cdot kip}{B}$ $N_u = 9.486 \frac{kip}{ft}$

$b := 12 \cdot in$ $h := 48 \cdot in$ conc. cover for reinf.: $t_c := 2 \cdot in$

$d_{b11} := 1.41 \cdot in$ $d := h - t_c - d_{b11} \cdot 1.5$ (2nd layer) $d = 43.885\, in$

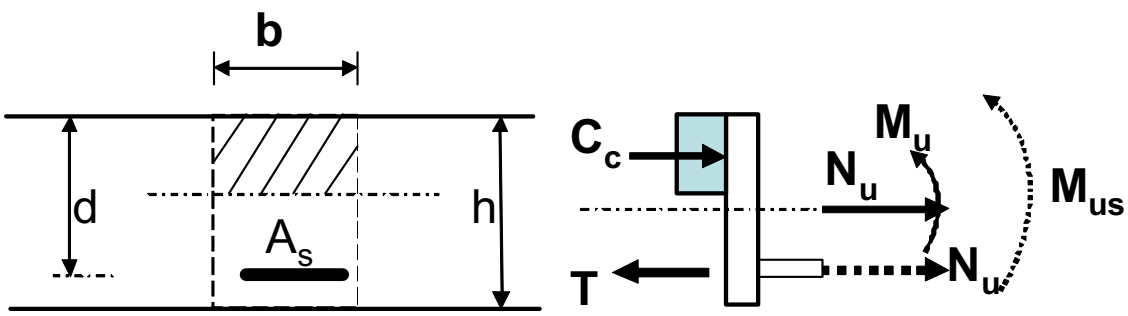

$M_{us} := M_{uo} - N_u \cdot \left(d - \frac{h}{2}\right)$ (Commentary, Ref. 2.2.18) $M_{us} = 106.28\, kip \cdot \frac{ft}{ft}$

$m := \frac{f_y}{0.85 \cdot f'_c}$ (Eq. 3.8.4a, Ref. 2.2.20,) $m = 14.118$

$M_n := \frac{M_{us} \cdot b}{\phi_t}$ $M_n = 118.089\, kip \cdot ft$ $R_n := \frac{M_n}{b \cdot d^2}$ (Eq. 3.8.4b, Ref. 2.2.20,) $R_n = 61.316\, psi$

$\rho := \frac{1}{m} \cdot \left(1 - \sqrt{1 - \frac{2 \cdot m \cdot R_n}{f_y}}\right)$ (Eq. 3.8.5, Ref. 2.2.20,) $\rho = 1.029 \times 10^{-3}$

$A_s := (\rho \cdot b \cdot d) + \frac{N_u \cdot b}{\phi_c \cdot f_y}$ (Commentary, Ref. 2.2.18) $A_s = 0.768\, in^2$

$A_{s\_min} := 0.0018 \cdot b \cdot h$ (Sect. 7.12.5, Ref. 2.2.14) $A_{s\_min} = 1.037\, in^2$

To count for D/C ratio (Demand/Capacity) = 0.6

$A_{s\_req} := \frac{A_s}{0.6}$ $A_{s\_req} = 1.28\,in^2$ try #11@12", As = 1.56 sq. in. O K

II-B Check Out-of-Plane Shear Capacity **V13 = -25 kip/ft**

Shear Capacity with axial tension **F2 = -351 kip (T)**

$A_g := b \cdot h$ $h = 48\,in$ $A_g = 576\,in^2$ $N_u := \frac{-351 \cdot kip}{B}$

$V_c := 2 \cdot \left(1 + \frac{N_u \cdot b}{500 \cdot A_g \cdot psi}\right) \cdot \sqrt{f'_c \cdot psi} \cdot b \cdot d$ (Eq. 11-8, Ref. 2.2.14,) $V_c = 72.022\,kip$

$V_{uo} := 25 \cdot \frac{kip}{ft}$ $\frac{(V_{uo}) \cdot b}{\phi_v \cdot V_c} = 0.579$ < D/C = 0.6 O K

II-C Chord Reinf. at slab edge (east and west) due to In-Plane Moment

M3 = -26779 kip-ft **F2 = -351 kip (T)**

$M_{ui} := 26779 \cdot kip \cdot ft$ $N_u := 351 \cdot kip$ $b := 4 \cdot ft$ $h := 37 \cdot ft$ $d := h - 5 \cdot in$

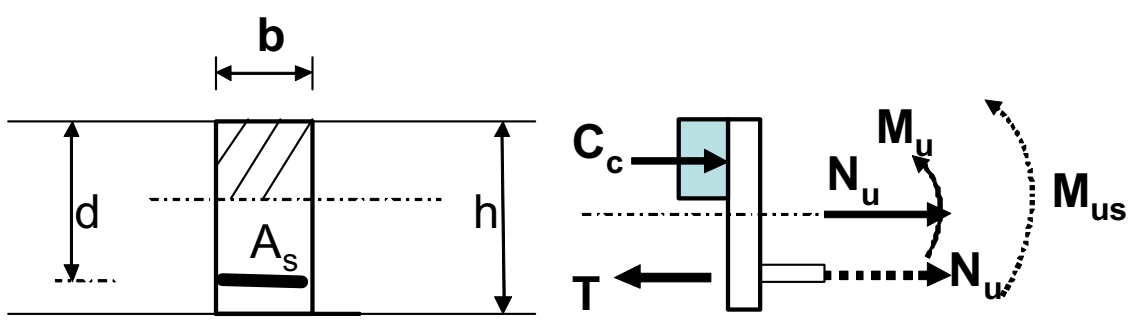

$M_{us} := M_{ui} - N_u \cdot \left(d - \frac{h}{2}\right)$ (Commentary, Ref. 2.2.18) $M_{us} = 2.043 \times 10^4\,kip \cdot ft$

$m := \frac{f_y}{0.85 \cdot f'_c}$ (Eq. 3.8.4a, Ref. 2.2.20,) $m = 14.118$

$M_n := \frac{M_{us}}{\phi_t}$ $M_n = 2.27 \times 10^4\,kip \cdot ft$ $R_n := \frac{M_n}{b \cdot d^2}$ (Eq. 3.8.4b, Ref. 2.2.20,) $R_n = 29.449\,psi$

$\rho := \frac{1}{m} \cdot \left(1 - \sqrt{1 - \frac{2 \cdot m \cdot R_n}{f_y}}\right)$ (Eq. 3.8.5, Ref. 2.2.20,) $\rho = 4.925 \times 10^{-4}$

$A_s := (\rho \cdot b \cdot d) + \frac{N_u}{\phi_t \cdot f_y}$ (Commentary, Ref. 2.2.18) $A_s = 16.879\,in^2$

To count for D/C ratio (Demand/Capacity) = 0.6

$A_{s\_req} := \frac{A_s}{0.6}$ $A_{s\_req} = 28.131\ in^2$ try 18#11, As = 28.08 in^2 O K

II-D Check In-Plane Shear Capacity **F1 = -813 kip**

$V_{ui} := 813 \cdot kip$ $b := 4 \cdot ft$ $h = 37\,ft$ $A_g := b \cdot h$ $d := h - 5 \cdot in$

Shear Capacity with axial tension **F2 = -351 kip (T)**

$A_g := b \cdot h$ $h = 444\,in$ $A_g = 2.131 \times 10^4\,in^2$ $N_u := -351 \cdot kip$

$V_c := 2 \cdot \left(1 + \frac{N_u}{500 \cdot A_g \cdot psi}\right) \cdot \sqrt{f'_c \cdot psi} \cdot b \cdot d$ (Eq. 11-8, Ref. 2.2.14,) $V_c = 2.882 \times 10^3\,kip$

$\frac{V_{ui}}{\phi_v \cdot V_c} = 0.47$ < D/C = 0.6 O K

For simplicity of placing rebars, use Reinforcement as follow:

In North-South direction (short bar):

Provide #11@6" T & B, added Chord Bar 7#11 at east and west slab edges

In East-West direction (long bar):

Provide #11@12" T & B, added Chord Bar 18#11 at north and south slab edges

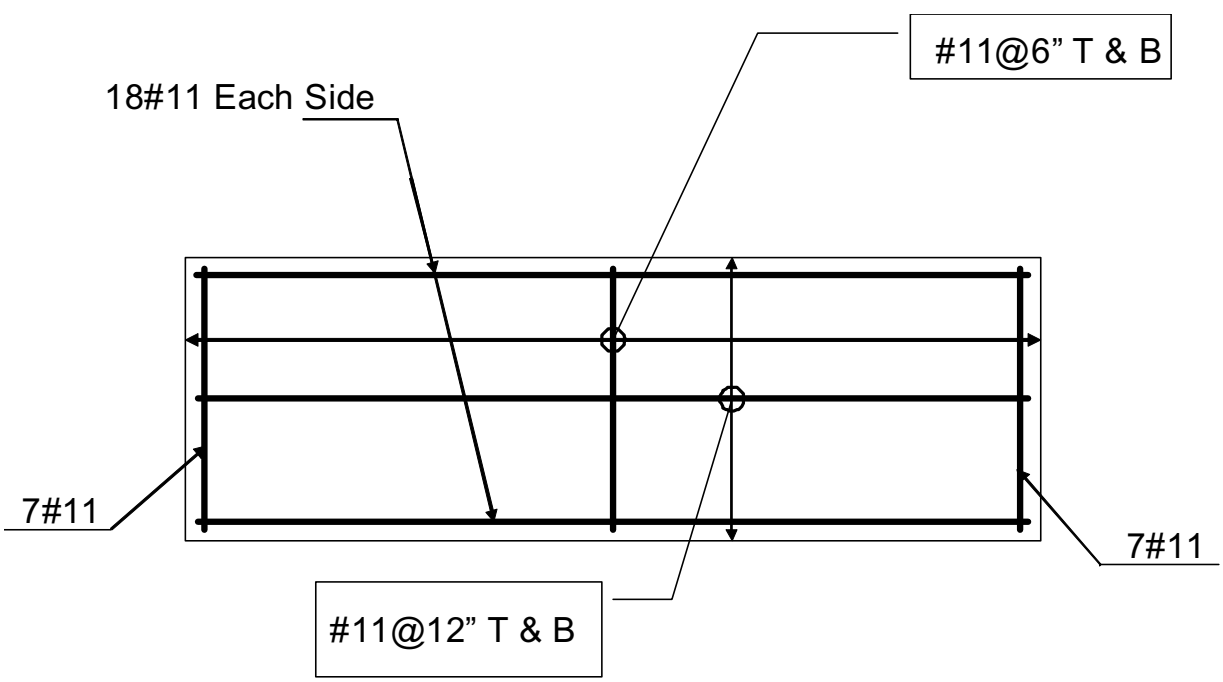

6.4.3

LONGITUDINAL WALL (48" THICK) DESIGN LOADS, COLUMN LINE E

Accidental torsion factor = 15% (See assumption 3.1.4)

Section cut design forces and moments, which follow a global axis system, for the longitudinal wall between column line 1 and 3 include in plane forces and moments: such as axial forces (tension/compression), in plane moment, and in plane shear. The section cut values are integrated along the section cut length, thus for SCUT5 the length is equal to 132.5'. Out of plane values such as out of plane bending and out of plane shear are attained by shell element forces and moments from SAP2000, which follow a local axis system. The out of plane bending moments provided are M22 and M12, which is a twisting moment that is combined with M22. The out of plane shear forces from the shell elements include V13 and V23. For column "F" longitudinal wall use same reinforcing as column "E" longitudinal wall, since it is conservative to use column "E" due to comparatively higher crane loads than column "F".

Follow notation below to convert from SAP2000 labeling (i.e. F2, M22...) to appropriate design forces and moments.

SCUT5
F2 = In Plane Shear
F3 = Axial Force, Compression (+) / Tension (-)
M1 = In Plane Moment

Section Cut	DL						Seismic (SRSS)					
	F1	F2	F3	M1	M2	M3	F1	F2	F3	M1	M2	M3
	Kip	Kip	Kip	Kip-ft	Kip-ft	Kip-ft	Kip	Kip	Kip	Kip-ft	Kip-ft	Kip-ft
SCUT5	-	-5	5681	-562	-	-	-	5082	7117	108396	-	-

Loads with accidental torsion factor

Section Cut	DL						Seismic (SRSS)					
	F1	F2	F3	M1	M2	M3	F1	F2	F3	M1	M2	M3
	Kip	Kip	Kip	Kip-ft	Kip-ft	Kip-ft	Kip	Kip	Kip	Kip-ft	Kip-ft	Kip-ft
SCUT5	-	-6	6533	-646	-	-	-	5844	8184	124655	-	-

Maximum Load Combination

Section Cut	DL + Seismic (SRSS)						DL - Seismic (SRSS)					
	F1	F2	F3	M1	M2	M3	F1	F2	F3	M1	M2	M3
	Kip	Kip	Kip	Kip-ft	Kip-ft	Kip-ft	Kip	Kip	Kip	Kip-ft	Kip-ft	Kip-ft
SCUT5	-	5838	14717	124009	-	-	-	-5850	-1651	-125301	-	-

Shell Element Forces and Moments
M22 = Out of Plane Moment
M12 = Twisting Moment
V13 = Out of Plane Shear
V23 = Out of Plane Shear

	Element Forces - Area Shells (1)						Element Forces - Area Shells (2)				
MAX MIN	M11	M22	M12	V13	V23	MAX	M11	M22	M12	V13	V23
	Kip-ft/ft	Kip-ft/ft	Kip-ft/ft	Kip/ft	Kip/ft		Kip-ft/ft	Kip-ft/ft	Kip-ft/ft	Kip/ft	Kip/ft
MAX	16	25	12	5	11	MAX	106	117	29	24	23
MIN	-13	-63	-12	-5	-1						

Loads with accidental torsion factor

	Element Forces - Area Shells (1)						Element Forces - Area Shells (2)				
MAX MIN	M11	M22	M12	V13	V23	MAX	M11	M22	M12	V13	V23
	Kip-ft/ft	Kip-ft/ft	Kip-ft/ft	Kip/ft	Kip/ft		Kip-ft/ft	Kip-ft/ft	Kip-ft/ft	Kip/ft	Kip/ft
MAX	19	29	14	5	13	MAX	122	134	33	28	26
MIN	-15	-73	-13	-6	-1						

Maximum Load Combination

	DL + Seismic (SRSS)						DL - Seismic (SRSS)				
MAX MIN	M11	M22	M12	V13	V23	MAX MIN	M11	M22	M12	V13	V23
	Kip-ft/ft	Kip-ft/ft	Kip-ft/ft	Kip/ft	Kip/ft		Kip-ft/ft	Kip-ft/ft	Kip-ft/ft	Kip/ft	Kip/ft
MAX	140	164	47	33	39	MAX	-103	-105	-20	-22	-14
MIN	107	62	20	22	25	MIN	-137	-207	-47	-33	-27

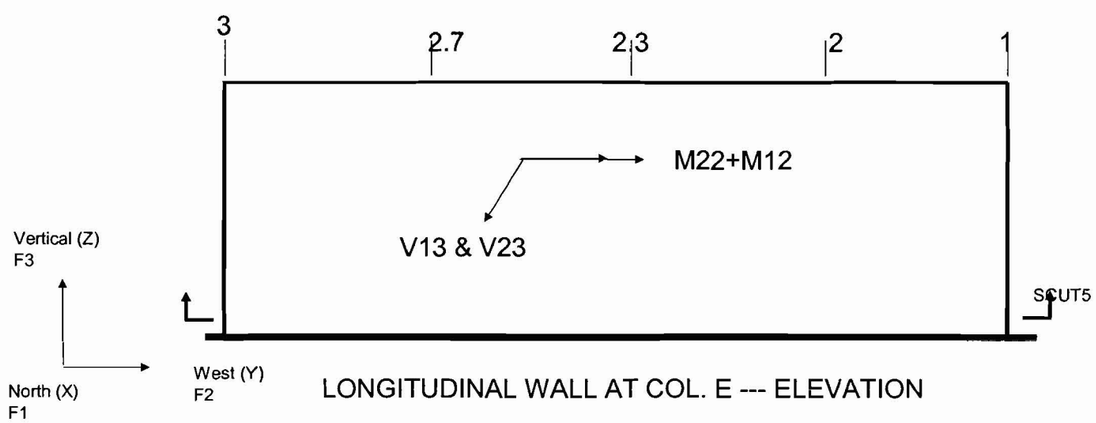

LONGITUDINAL WALL AT COL. E --- ELEVATION

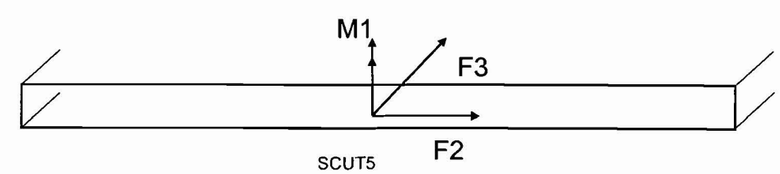

6.4.3.1 LONGITUDINAL NORTH WALL E REINFORCEMENT, COLUMN LINE 1 TO 3

Longitudinal Wall COL E-SCUT5---D+L-SRSS

Design Loads				Shear Wall Section Properties				Concrete & Rebar Properties			
Axial Force (-Tension)	Ft =	-1651	kips	Height of Wall (segment)	h_w =	58	ft	Concrete Design Strength	f'c =	5000	psi
Axial Force (+Comp)	Fc =	0	kips	Ht of Wall Between Floors	H =	58	ft	Concrete Strain	ε_c =	0.002	
In plane shear	Vu =	5850	kips	Length of Wall (Segment)	l_w =	132.5	ft	Rebar Yield Strength	fy =	60	ksi
In plane Moment	Mz =	125301	ft-kips	Thickness of Wall	t_w =	4	ft	Rebar Yield Strain	ε_y =	0.002	
				Shear Area of Wall (Segment)	Acv = l_w*t_w =	530	ft^2	Min Steel Required	ρ_{min} =	0.0025	
								Concrete Cover		5	in
Out of plane shear	Vz =	33	kips/ft					(Use 5" = 2" clear cover + diameter of the outer layer rebar + 1/2 diameter of the inner layer rebar)			
Out of plane Moment	My =	254	ft-kips/ft (M22+M12)								

Note: For ACI 349, see Ref. 2.2.14, for sections 1.0 to 6.0 of this design subset.

1.0 Check Shear on gross section - ACI 349: 21.6.5.6

Nominal Shear Capacity = 8*Acv*(f'c) $^{1/2}$ — Vn (kips) = 43173

Factored Shear Load = Vu / ϕ — Vu/ϕ (kips)= 9750.0

(ϕ = .6 per ACI 349 - 9.3.4)

Demand Capacity Ratio

Check Code 21.6.5.6 Demand/Capacity Ratio — D/C = (Vu/ϕ)/Vn — D/C = 0.23 — **SHEAR WALL THICKNESS OK**

2.0 Horizontal Reinforcing Requirements

2.0a) ACI 349 - 21.6.5.3 Requirements

Determine α_c : h_w / l_w = 0.44 — α_c = 3 — α_c=3 for h_w/l_w<1.5, α_c varies linearly from 3 for h_w/l_w=1.5 to 2 for h_w/l_w=2.

Determine Concrete Shear Capacity Vc=Acv*α_c*(f'c) $^{1/2}$ — Vc = 16189.9 kips

Determine Shear Carried by Steel Vs=Vu/ϕ -Vc — Vs = 0.0 kips

Determine Required Shear Reinforcing ρ=Vs/(fy*Acv) — ρ = 0.0000

21.6.5.3 Shear Reinforcing Requirements — ρ_n = **0.0025** — MINIMUM STEEL GOVERNS

2.0b) ACI 349 - 11.10.6 Equation 11-31 Requirements

Determine Concrete Shear Capacity — Vc = 13916.9 kips — Vc=3.3*(f'$_c$)$^{0.5}$*(0.8*t_w*l_w)+F_t*0.8*l_w/(4*l_w)

Determine Shear Carried by Steel Vs=Vu/ϕ -Vc — Vs = 0.0 kips

Determine Required Shear Reinforcing — ρ = 0.0000 — ρ=Vs/(0.8*l_w*t_w*144*fy)

11.10.6 - Equation 11-31 Shear Reinforcing Requirements — ρ_n = **0.0025** — MINIMUM STEEL GOVERNS

2.0c) ACI 349 - 11.10.6 Equation 11-32 Requirements

Check Bounding Case Mu/Vu - l_w/2 = -44.83 — **Mu/Vu-lw/2 < 0 equation 11-32 NOT APPLICABLE**

Determine Concrete Shear Capacity — Vc= N/A — Vc=[0.6*f'$_c^{v>}$+l_w*(1.25*f'$_c^{v>}$+0.2*Ft*1000/(l_w*t_w*144))/(Mu/Vu-l_w/2)]*t_w*0.8*l_w*144/1000

Determine Shear Carried by Steel — Vs = N/A — Vs=Vu/ϕ -Vc

Determine Required Shear Reinforcing Requirements — ρ =N/A — ρ=Vs/(0.8*l_w*t_w*144*fy)

11.10.6 - Equation 11-32 Shear Reinforcing Requirements — ρ_n = **N/A** — **EQUATION 11-32 NOT APPLICABLE**

2.0d) Horizontal Shear Reinforcing Requirements (max of 2a, 2b, 2c) — ρ_n = **0.0025**

2.0e) Select Horizontal Shear Reinforcing — **Asn required per ft on each face = 0.72 in^2/ft each face** — (ρ_n*12*t_w*12/2)

Use 1-#11@12"c/c EF — **Asn provided = 1.56 in^2/ft each face** — ρ_n **(prov)= 0.005417**

2.0f) Check Demand / Capacity Ratio for In-Plane Shear: — D/C = 0.25 — D/C=(Vu/ϕ)/[Vc+(Asn*2*fy*l_w*t_w*144/(12*t_w*12))]

3.0 Vertical Reinforcing Requirements

3.0a) ACI 349 21.6.5.5 and 11.10.9.4 - Minimum vertical reinforcing ratio : — hw/lw = 0.44

If h_w/l_w>2.0, use: $\rho_{v\,min}$=0.0025+0.5(2.5-h_w/l_w)(ρ_n-0.0025)<=ρ_n

ρ_v **(min) =0.0025** — If h_w/l_w<=2.0, use: ρ_v>=ρ_n

3.0b) Check Shear Friction Requirements

In plane shear per foot of wall: 44.15 kips/ft (Vu/l_w)

Transverse shear per ft of wall: 33.00 kips/ft (Vz)

Resultant Shear 55.12 kips/ft $[(\text{in-plane shear})^2+(\text{transverse shear})^2]^{0.5}$

Calculate limiting shear friction strength at joint per ACI 349-11.7.5:

Vn<.2f'cAv for f'c = 5000 psi Vn=1000Av
Vn<800Av The limiting value of 800Av controls
Vn (MAX) = 460.8 kips/ft **Vn(MAX>Resultant shear .....OK**

Calculate shear friction reinforcing requirements per ACI 349 - 11.7.4.1:

Vn = Avf*fy*μ μ = 1.0 for concrete placed against hardened concrete intentionally roughened to a full amplitude of 1/4 inch (ACI 349-11.7.9)

Avf = Vu/2*ϕ*μ*fy (steel required per face)
Avf = 0.54 in^2/ft (steel required on each face for shear friction))

Calculate steel required for net Tension force

At = T/2*ϕ*fy*lw
At = 0.12 in^2/ft (steel required on each face for direct tension)

Steel Requirements for Shear Friction Avf + At

Av = 0.66 in^2/ft (steel required on each face for shear friction + direct tension)

ρv(req'd) = 0.0023 ($\rho_{v\ req'd}$=(2*Av)/(12*t_w*12)

3.0c) Vertical Reinforcing Requirements (max of 3a,3b) **ρ_v = 0.0025**

3.0d) Select Vertical Reinforcing **Asv required per ft on each face = 0.72 in^2/ft each face** ($\rho_{v\ min}$*12*t_w*12/2)

Use 1-#11@12"c/c EF Asv provided = 1.56 in^2/ft each face ρ_v (prov)= 0.005416667

3.0e) Perform Strain-Compatible Section Analysis - For Axial Force (Tension) **Ft =** -1651 kips

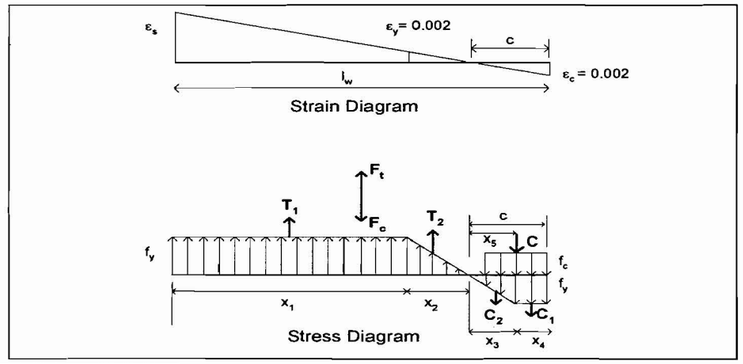

ϕ : Strength reduction factor (= 0.9 for tension, ACI 349 9.3.2.2), ϕ = 0.9
c : Distance from compression face to neutral axis (ft)
l_w : Length of wall (ft)
ε_{s_max} = [(l_w -c) / c] * ε_c
X_1 = l_w - c - X_2 (ft) (length of wall with tension steel reinforcing steel strain > ε_y)
X_2 = X_3 = (ε_y / ε_c) * c (ft) (length of wall with tension / compression steel reinforcing steel strain < ε_y)
X_4 = c - X_3 (ft) (length of wall with compression steel reinforcing steel strain > ε_y)
T_1 = X_1 * As * fy (kips)
T_2 = C_2 = 0.5 * X_2 * As * fy (kips)
C_1 = X_4 * As * fy (kips)
C = 0.85 * 0.8 * c * t_w * f'$_c$ * 144 (kips)
Balanced condition : Tension = Compression, T_1+T_2-C_2-C_1-C+Ft/ϕ = 0.
M_u : Total moment capacity = ϕ{T_1(X_2+X_1/2) + T_2(X_2*2/3) + C(c-0.8*c/2) + F_t(l_w/2-c)/ϕ + C_2(X_3*2/3) + C_1(X_3+X_4/2)}, (kip-ft)

Using Goal Seek to find "c" and "Mu"

c (ft)	l_w - c (ft)	ε_{s_max}	X_1 (ft)	X_2=X_3 (ft)	X_4 (ft)	T_1 (k)	T_2=C_2 (k)	C_1 (k)	C (k)	T_1+T_2-C_2-C_1-C+F_t/ϕ	M_u (k-ft)
9.85	122.65	0.0249	112.81	9.85	0.00	21118	922	0	19283	0.000	1279428

Verified that equations were correct

c (ft)	l_w - c (ft)	ε_{s_max}	X_1 (ft)	X_2=X_3 (ft)	X_4 (ft)	T_1 (k)	T_2=C_2 (k)	C_1 (k)	C (k)	T_1+T_2-C_2-C_1-C+F_t/ϕ	M_u (k-ft)
9	123.5	0.0274	114.50	9.00	0.00	21434.4	842.4	0	17626	1974	1278265
11	121.5	0.0221	110.50	11.00	0.00	20685.6	1029.6	0	21542	-2691	1283714
10	122.5	0.0245	112.50	10.00	0.00	21060	936	0	19584	-358	1279819

Perform Strain-Compatible Section Analysis - For Axial Force (Comp) **Fc =** 0 kips

ϕ : Strength reduction factor (= 0.7 to 0.9 for comp, ACI 349 9.3.2.2), ϕ = 0.9000
If Fc<=0, ϕ=0.9; if Fc>0, ϕ=0.9-0.2*Fc/(0.1*Acv*144*f'$_c$/1000)

Using Goal Seek to find "c" and "Mu"

c (ft)	l_w - c (ft)	ε_{s_max}	X_1 (ft)	X_2=X_3 (ft)	X_4 (ft)	T_1 (k)	T_2=C_2 (k)	C_1 (k)	C (k)	T_1+T_2-C_2-C_1-C+F_c/ϕ	M_u (k-ft)
10.63	121.87	0.0229	111.23	10.63	0.00	20823	995	0	20823	0.000	1373836

Verified that equations were correct

c (ft)	l_w - c (ft)	ε_{s_max}	X_1 (ft)	X_2=X_3 (ft)	X_4 (ft)	T_1 (k)	T_2=C_2 (k)	C_1 (k)	C (k)	T_1+T_2-C_2-C_1-C+F_c/ϕ	M_u (k-ft)
9	123.5	0.0274	114.50	9.00	0.00	21434.4	842.4	0	17626	3809	1372784
11	121.5	0.0221	110.50	11.00	0.00	20685.6	1029.6	0	21542	-857	1374931
10	122.5	0.0245	112.50	10.00	0.00	21060	936	0	19584	1476	1372688

3.0f) Check Demand / Capacity Ratio for In-Plane Moment:

Vertical Reinforcing Ratio Provided by Design : ρ_v (prov)= 0.0054 1-#11@12"c/c EF ρ_v = (2*Asv)/(12*t_w*12)
D/C = (in-plane moment Mz) / (Min of Mu-ten, Mu-comp) D/C = 0.10 **Section Adequate**
Vertical Reinforcing Ratio Required for In-Plane Moment: $\rho_{vl\,req}$ = 0.0005 $\rho_{v\,req}$ = ρ_v*(D/C)

3.0g) Consider Out-of-Plane Moment:

Vertical Reinf Ratio Required for Out-of-Plane Bending: $\rho_{vt\,req}$ = 0.00259 (per face) $\rho f_y bd^2*(1-.59\rho f_y/f'_c)=Mu/\phi$ solve for ρ Ref. 2.2.19, Section 4-3

3.0h) Total Reinforcing required for axial force, in-plane and out of plane bending ρ_v = 0.0052 = $\rho_{vl}+\rho_{vt} > 2\rho_{vt}$

D/C = ρ_v(reqd) / ρ_v (prov) D/C = 0.96 **Section Adequate** = ρ_{vt}(req'd) / ρ_v(prov)

4.0 Boundary Elements:

h_w / l_w = 0.44 <2, No Need To Check for Boundary Elements

5.0 Out-of-Plane Shear:

Nominal Shear Strength Provided by The Concrete Vc=2*(f'c)$^{1/2}$*b*d Vc = 73.0 kips/ft width of wall

Check Demand / Capacity Ratio: D/C = 0.53 No Shear Reinforcement Required
D/C = (out-of-plane shear Vz) / (0.85*Vc)

6.0 Tabulate Reinforcement Requirements And D/C Ratios:

Use 4 ft thick wall with 1-#11@12"c/c EF Horizontal Reinforcement
1-#11@12"c/c EF Vertical Reinforcement.

For Shear on Gross Section: D/C = 0.23
For In-Plane Shear: D/C = 0.25
For Out-of-Plane Shear: D/C = 0.53
Bending + axial Loads D/C = 0.96

Boundary Elements D/C= BOUNDARY ELEMENTS NOT REQUIRED

Longitudinal Wall COL E-SCUT5---D+L+SRSS

Design Loads			Shear Wall Section Properties			Concrete & Rebar Properties		
Axial Force (-Tension)	Ft =	0 kips	Height of Wall (segment)	h_w =	58 ft	Concrete Design Strength	f'c =	5000 psi
Axial Force (+Comp)	Fc =	14717 kips	Ht of Wall Between Floors	H =	58 ft	Concrete Strain	ε_c =	0.002
In plane shear	Vu =	5838 kips	Length of Wall (Segment)	l_w =	132.5 ft	Rebar Yield Strength	fy =	60 ksi
In plane Moment	Mz =	124009 ft-kips	Thickness of Wall	t_w =	4 ft	Rebar Yield Strain	ε_y =	0.002
			Shear Area of Wall (Segment)	Acv = l_w*t_w =	530 ft^2	Min Steel Required	ρ_{min} =	0.0025
						Concrete Cover		5 in
Out of plane shear	Vz =	39 kips/ft				(Use 5" = 2" clear cover + diameter of the outer layer rebar + 1/2 diameter of the inner layer rebar)		
Out of plane Moment	My =	211 ft-kips/ft (M22+M12)						

Note: For ACI 349, see Ref. 2.2.14, for sections 1.0 to 6.0 of this design subset.

1.0 Check Shear on gross section - ACI 349: 21.6.5.6

Nominal Shear Capacity = 8*Acv*(f'c) $^{1/2}$ Vn (kips) = 43173

Factored Shear Load = Vu / ϕ Vu/ϕ (kips)= 9730.0
(ϕ = .6 per ACI 349 - 9.3.4)

Demand Capacity Ratio
Check Code 21.6.5.6 Demand/Capacity Ratio D/C = (Vu/ϕ)/Vn D/C = 0.23 **SHEAR WALL THICKNESS OK**

2.0 Horizontal Reinforcing Requirements

2.0a) ACI 349 - 21.6.5.3 Requirements

Determine α_c : h_w / l_w = 0.44 α_c = 3 α_c=3 for h_w/l_w<1.5, α_c varies linearly from 3 for h_w/l_w=1.5 to 2 for h_w/l_w=2.
Determine Concrete Shear Capacity Vc=Acv*α_c*(f'c) $^{1/2}$ Vc = 16189.9 kips
Determine Shear Carried by Steel Vs=Vu/ϕ -Vc Vs = 0.0 kips

Determine Required Shear Reinforcing ρ=Vs/(fy*Acv) ρ = 0.0000

21.6.5.3 Shear Reinforcing Requirements ρ_n **= 0.0025** MINIMUM STEEL GOVERNS

2.0b) ACI 349 - 11.10.6 Equation 11-31 Requirements

Determine Concrete Shear Capacity Vc = 14247.1 kips Vc=3.3*(f'$_c$)$^{0.5}$*(0.8*t_w*l_w)+F_t*0.8*l_w/(4*l_w)

Determine Shear Carried by Steel Vs=Vu/ϕ -Vc Vs = 0.0 kips
Determine Required Shear Reinforcing ρ = 0.0000 ρ=Vs/(0.8*l_w*t_w*144*fy)

11.10.6 - Equation 11-31 Shear Reinforcing Requirements ρ_n **= 0.0025** MINIMUM STEEL GOVERNS

2.0c) ACI 349 - 11.10.6 Equation 11-32 Requirements

Check Bounding Case Mu/Vu - l_w/2 = -45.01 **Mu/Vu-lw/2 < 0 equation 11-32 NOT APPLICABLE**

Determine Concrete Shear Capacity Vc= N/A Vc=[0.6*f'$_c$$^{0.5}$+$l_w$*(1.25*f'$_c$$^{0.5}$+0.2*Ft*1000/($l_w$*$t_w$*144))/(Mu/Vu-$l_w$/2)]*$t_w$*0.8*$l_w$*144/1000

Determine Shear Carried by Steel Vs = N/A Vs=Vu/ϕ -Vc
Determine Required Shear Reinforcing Requirements ρ =N/A ρ=Vs/(0.8*l_w*t_w*144*fy)

11.10.6 - Equation 11-32 Shear Reinforcing Requirements ρ_n **= N/A EQUATION 11-32 NOT APPLICABLE**

2.0d) Horizontal Shear Reinforcing Requirements (max of 2a, 2b, 2c) ρ_n **= 0.0025**

2.0e) Select Horizontal Shear Reinforcing **Asn required per ft on each face = 0.72 in^2/ft each face** (ρ_n*12*t_w*12/2)

Use 1-#11@12"c/c EF Asn provided = 1.56 in^2/ft each face ρ_n **(prov)=0.0054167**

2.0f) Check Demand / Capacity Ratio for In-Plane Shear:

D/C = 0.25 D/C=(Vu/ϕ)/[Vc+(Asn*2*fy*l_w*t_w*144/(12*t_w*12))]

3.0 Vertical Reinforcing Requirements

3.0a) ACI 349 21.6.5.5 and 11.10.9.4 - Minimum vertical reinforcing ratio : hw/lw = 0.44

If h_w/l_w>2.0, use: $\rho_{v\,min}$ =0.0025+0.5(2.5-h_w/l_w)(ρ_n-0.0025)<=ρ_n
ρ_v **(min) =0.0025** If h_w/l_w<=2.0, use: ρ_v>=ρ_n

3.0b) Check Shear Friction Requirements

In plane shear per foot of wall: 44.06 kips/ft (Vu/l_w)

Transverse shear per ft of wall: 39.00 kips/ft (Vz)

Resultant Shear 58.84 kips/ft $[(\text{in-plane shear})^2+(\text{transverse shear})^2]^{0.5}$

Calculate limiting shear friction strength at joint per ACI 349-11.7.5:

Vn<.2f'cAv for f'c = 5000 psi Vn=1000Av
Vn<800Av The limiting value of 800Av controls
Vn (MAX) = 460.8 kips/ft **Vn(MAX>Resultant shear .....OK**

Calculate shear friction reinforcing requirements per ACI 349 - 11.7.4.1:

Vn = Avf*fy*μ μ = 1.0 for concrete placed against hardened concrete intentionally roughened to a full amplitude of 1/4 inch (ACI 349-11.7.9)

Avf = Vu/2*ϕ*μ*fy (steel required per face)
Avf = 0.58 in^2/ft (steel required on each face for shear friction))

Calculate steel required for net Tension force

At = T/2*ϕ*fy*lw
At = 0.00 in^2/ft (steel required on each face for direct tension)

Steel Requirements for Shear Friction Avf + At

Av = 0.58 in^2/ft (steel required on each face for shear friction + direct tension)

ρv(req'd) = 0.0020 ($\rho_{v\ req'd}$=(2*Av)/(12*t_w*12)

3.0c) Vertical Reinforcing Requirements (max of 3a,3b) **ρ_v = 0.0025**

3.0d) Select Vertical Reinforcing **Asv required per ft on each face = 0.72 in²/ft each face** ($\rho_{v\ min}$*12*t_w*12/2)

Use 1-#11@12"c/c EF Asv provided = 1.56 in²/ft each face ρ_v (prov)= 0.0054167

3.0e) Perform Strain-Compatible Section Analysis - For Axial Force (Tension) **Ft =** 0 kips

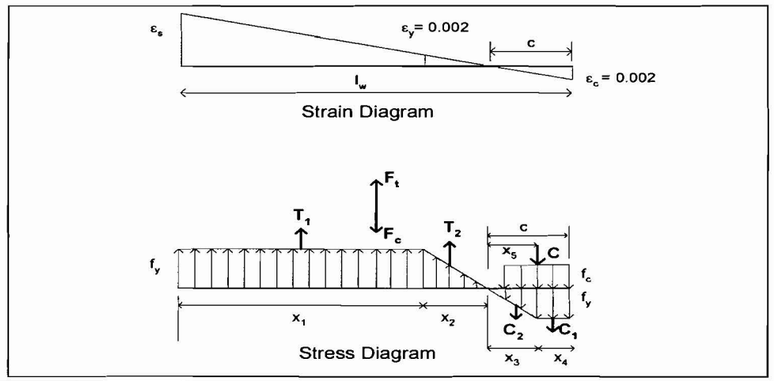

ϕ : Strength reduction factor (= 0.9 for tension, ACI 349 9.3.2.2), ϕ = 0.9
c : Distance from compression face to neutral axis (ft)
l_w : Length of wall (ft)
$\varepsilon_{s\_max} = [(l_w - c) / c] * \varepsilon_c$
$X_1 = l_w - c - X_2$ (ft) (length of wall with tension steel reinforcing steel strain > ε_y)
$X_2 = X_3 = (\varepsilon_y / \varepsilon_c) * c$ (ft) (length of wall with tension / compression steel reinforcing steel strain < ε_y)
$X_4 = c - X_3$ (ft) (length of wall with compression steel reinforcing steel strain > ε_y)
$T_1 = X_1 * As * fy$ (kips)
$T_2 = C_2 = 0.5 * X_2 * As * fy$ (kips)
$C_1 = X_4 * As * fy$ (kips)
$C = 0.85 * 0.8 * c * t_w * f'_c * 144$ (kips)
Balanced condition : Tension = Compression, $T_1+T_2-C_2-C_1-C+Ft/\phi = 0$.
M_u : Total moment capacity = $\phi\{T_1(X_2+X_1/2) + T_2(X_2*2/3) + C(c-0.8*c/2) + F_t(l_w/2-c)/\phi + C_2(X_3*2/3) + C_1(X_3+X_4/2)\}$, (kip-ft)

Using Goal Seek to find "c" and "Mu"

c (ft)	l_w - c (ft)	ε_{s_max}	X_1 (ft)	X_2=X_3 (ft)	X_4 (ft)	T_1 (k)	T_2=C_2 (k)	C_1 (k)	C (k)	$T_1+T_2-C_2-C_1-C+F_t/\phi$	M_u (k-ft)
10.63	121.87	0.0229	111.23	10.63	0.00	20823	995	0	20823	0.000	1373836

Verified that equations were correct

c (ft)	l_w - c (ft)	ε_{s_max}	X_1 (ft)	X_2=X_3 (ft)	X_4 (ft)	T_1 (k)	T_2=C_2 (k)	C_1 (k)	C (k)	$T_1+T_2-C_2-C_1-C+F_t/\phi$	M_u (k-ft)
9	123.5	0.0274	114.50	9.00	0.00	21434.4	842.4	0	17626	3809	1372784
11	121.5	0.0221	110.50	11.00	0.00	20685.6	1029.6	0	21542	-857	1374931
10	122.5	0.0245	112.50	10.00	0.00	21060	936	0	19584	1476	1372688

Perform Strain-Compatible Section Analysis - For Axial Force (Comp) **Fc =** 14717 kips

ϕ : Strength reduction factor (= 0.7 to 0.9 for comp, ACI 349 9.3.2.2), ϕ = 0.8229
If Fc<=0, ϕ=0.9; if Fc>0, ϕ=0.9-0.2*Fc/(0.1*Acv*144*f'_c/1000)

Using Goal Seek to find "c" and "Mu"

c (ft)	l_w - c (ft)	ε_{s_max}	X_1 (ft)	X_2=X_3 (ft)	X_4 (ft)	T_1 (k)	T_2=C_2 (k)	C_1 (k)	C (k)	T_1+T_2-C_2-C_1-C+F_c/ϕ	M_u (k-ft)
18.30	114.20	0.0125	95.90	18.30	0.00	17953	1713	0	35838	0.000	2042553

Verified that equations were correct

c (ft)	l_w - c (ft)	ε_{s_max}	X_1 (ft)	X_2=X_3 (ft)	X_4 (ft)	T_1 (k)	T_2=C_2 (k)	C_1 (k)	C (k)	T_1+T_2-C_2-C_1-C+F_c/ϕ	M_u (k-ft)
17	115.5	0.0136	98.50	17.00	0.00	18439.2	1591.2	0	33293	3031	2039137
19	113.5	0.0119	94.50	19.00	0.00	17690.4	1778.4	0	37210	-1634	2045893
18	114.5	0.0127	96.50	18.00	0.00	18064.8	1684.8	0	35251	699	2041445

3.0f) Check Demand / Capacity Ratio for In-Plane Moment:

Vertical Reinforcing Ratio Provided by Design : ρ_v (prov)= 0.0054 1-#11@12"c/c EF ρ_v = (2*Asv)/(12*t_w*12)
D/C = (in-plane moment Mz) / (Min of Mu-ten, Mu-comp) D/C = 0.09 **Section Adequate**
Vertical Reinforcing Ratio Required for In-Plane Moment: $\rho_{vt\ req}$ = 0.0005 $\rho_{v\ req}$ = ρ_v*(D/C)

3.0g) Consider Out-of-Plane Moment:

Vertical Reinf Ratio Required for Out-of-Plane Bending: $\rho_{vt\ req}$ = 0.00215 (per face) $\rho f_y bd^2*(1-.59\rho f_y/f'_c)=Mu/\phi$ solve for ρ Ref. 2.2.19, Section 4-3

3.0h) Total Reinforcing required for axial force, in-plane and out of plane bending ρ_v = 0.0043 = $\rho_{vl}+\rho_{vt} > 2\rho_{vt}$

D/C = ρ_v(reqd) / ρ_v (prov) D/C = 0.79 **Section Adequate** = ρ_{vl}req'd) / ρ_v(prov)

4.0 Boundary Elements:

h_w / l_w = 0.44 <2, No Need To Check for Boundary Elements

5.0 Out-of-Plane Shear:

Nominal Shear Strength Provided by The Concrete Vc=2*(f'c)$^{1/2}$*b*d Vc = 73.0 kips/ft width of wall

Check Demand / Capacity Ratio: D/C = 0.63 No Shear Reinforcement Required
D/C = (out-of-plane shear Vz) / (0.85*Vc)

6.0 Tabulate Reinforcement Requirements And D/C Ratios:

Use 4 ft thick wall with 1-#11@12"c/c EF Horizontal Reinforcement
1-#11@12"c/c EF Vertical Reinforcement.

For Shear on Gross Section: D/C = 0.23
For In-Plane Shear: D/C = 0.25
For Out-of-Plane Shear: D/C = 0.63
Bending + axial Loads D/C = 0.79

Boundary Elements D/C= BOUNDARY ELEMENTS NOT REQUIRED

6.4.4

Transverse Walls (48" thick) Design Loads, Column 1

Section cut design forces and moments, which follow a global axis system, for the transverse wall on column line 1include in plane forces and moments: such as axial forces (tension/compression), in plane moment, and in plane shear. The section cut values are integrated along the section cut length, thus for SCUT6a and SCUT6b the length is equal to 25.5'. Out of plane values such as out of plane bending and out of plane shear are attained by shell element forces and moments from SAP2000, which follow a local axis system. The out of plane bending moments provided are M22 and M12, which is a twisting moment that is combined with M22. The out of plane shear forces from the shell elements include V13 and V23.

Follow notation below to convert from SAP2000 labeling (i.e. F1, M22...) to appropriate design forces and moments.

SCUT6a & SCUT6b
F1 = In Plane Shear
F3 = Axial Force, Compression (+) / Tension (-)
M2 = In Plane Moment

Shell Element Forces and Moments
M22 = Out of Plane Moment
M12 = Twisting Moment
V13 = Out of Plane Shear
V23 = Out of Plane Shear

Accidental torsion factor= 15% (See assumption 3.1.4)

Section Cut	F1	F2	F3	M1	M2	M3	F1	F2	F3	M1	M2	M3
	Kip	Kip	Kip	Kip-ft	Kip-ft	Kip-ft	Kip	Kip	Kip	Kip-ft	Kip-ft	Kip-ft
SCUT6a	-88	-	1190	-	360	-	1693	-	3037	-	30441	-
SCUT6b	92	-	1199	-	-291	-	1695	-	3040	-	30422	-

MAX MIN	M11	M22	M12	V13	V23	MAX	M11	M22	M12	V13	V23
	Kip-ft/ft	Kip-ft/ft	Kip-ft/ft	Kip/ft	Kip/ft		Kip-ft/ft	Kip-ft/ft	Kip-ft/ft	Kip/ft	Kip/ft
MAX	7	29	11	2	0	MAX	156.0	91.3	28.5	15.9	8.7
MIN	-11	-7	-11	-2	-2						

Loads with accidental torsion factor

Section Cut	F1	F2	F3	M1	M2	M3	F1	F2	F3	M1	M2	M3
	Kip	Kip	Kip	Kip-ft	Kip-ft	Kip-ft	Kip	Kip	Kip	Kip-ft	Kip-ft	Kip-ft
SCUT6a	-101	-	1368	-	414	-	1947	-	3492	-	35007	-
SCUT6b	105	-	1378	-	-335	-	1949	-	3496	-	34985	-

MAX MIN	M11	M22	M12	V13	V23	MAX	M11	M22	M12	V13	V23
	Kip-ft/ft	Kip-ft/ft	Kip-ft/ft	Kip/ft	Kip/ft		Kip-ft/ft	Kip-ft/ft	Kip-ft/ft	Kip/ft	Kip/ft
MAX	8	34	12	2	0	MAX	179.4	105.0	32.8	18.3	10.0
MIN	-13	-8	-12	-2	-2						

Maximum Load Combination

Section Cut	F1	F2	F3	M1	M2	M3	F1	F2	F3	M1	M2	M3
	Kip	Kip	Kip	Kip-ft	Kip-ft	Kip-ft	Kip	Kip	Kip	Kip-ft	Kip-ft	Kip-ft
SCUT6a	1845	-	4861	-	35421	-	-2048	-	-2124	-	-34594	-
SCUT6b	2055	-	4875	-	34651	-	-1844	-	-2118	-	-35320	-

Maximum Load Combination

MAX MIN	M11	M22	M12	V13	V23	MAX MIN	M11	M22	M12	V13	V23
	Kip-ft/ft	Kip-ft/ft	Kip-ft/ft	Kip/ft	Kip/ft		Kip-ft/ft	Kip-ft/ft	Kip-ft/ft	Kip/ft	Kip/ft
MAX	188	138	45	20	10	MAX	-171	-71	-21	-16	-10
MIN	166	97	21	16	8	MIN	-192	-113	-45	-20	-12

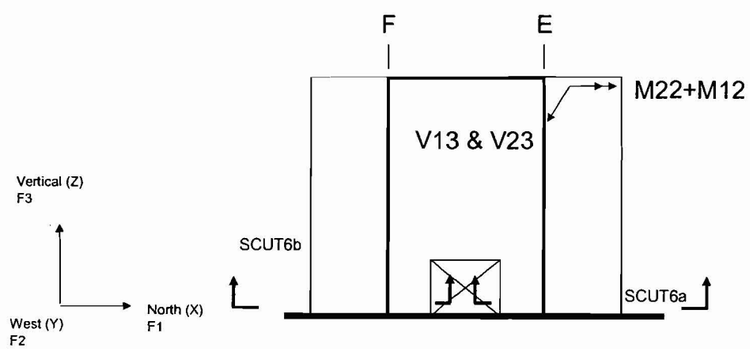

TRANSVERSE WALL AT COL. 1 ---- ELEVATION

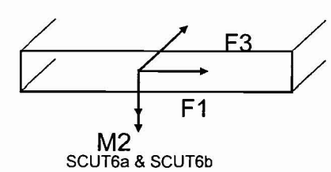

6.4.4.1 TRANSVERSE WALL REINFORCEMENT, COLUMN LINE 1

Transverse Wall COL 1-SCUT6a---D+L-SRSS

Design Loads				Shear Wall Section Properties				Concrete & Rebar Properties			
Axial Force (-Tension)	Ft =	-2124	kips	Height of Wall (segment)	h_w =	58	ft	Concrete Design Strength	f'c =	5000	psi
Axial Force (+Comp)	Fc =	0	kips	Ht of Wall Between Floors	H =	58	ft	Concrete Strain	ε_c =	0.002	
In plane shear	Vu =	2048	kips	Length of Wall (Segment)	l_w =	25.5	ft	Rebar Yield Strength	fy =	60	ksi
In plane Moment	Mz =	34594	ft-kips	Thickness of Wall	t_w =	4	ft	Rebar Yield Strain	ε_y =	0.002	
				Shear Area of Wall (Segment)	Acv = l_w*t_w =	102	ft^2	Min Steel Required	ρ_{min} =	0.0025	
								Concrete Cover		5	in
Out of plane shear	Vz =	20	kips/ft					(Use 5" = 2" clear cover + diameter of the outer layer rebar + 1/2 diameter of the inner layer rebar)			
Out of plane Moment	My =	158	ft-kips/ft (M22+M12)								

Note: For ACI 349, see Ref. 2.2.14, for sections 1.0 to 6.0 of this design subset.

1.0 Check Shear on gross section - ACI 349: 21.6.5.6

Nominal Shear Capacity = 8*Acv*(f'c) $^{1/2}$ — Vn (kips) = 8309

Factored Shear Load = Vu / ϕ — Vu/ϕ (kips)= 3413.3
(ϕ = .6 per ACI 349 - 9.3.4)

Demand Capacity Ratio
Check Code 21.6.5.6 Demand/Capacity Ratio — D/C = (Vu/ϕ)/Vn — D/C = 0.41 — **SHEAR WALL THICKNESS OK**

2.0 Horizontal Reinforcing Requirements

2.0a) ACI 349 - 21.6.5.3 Requirements

Determine α_c : h_w / l_w = 2.27 — α_c = 2 — α_c=3 for h_w/l_w<1.5, α_c varies linearly from 3 for h_w/l_w=1.5 to 2 for h_w/l_w=2.

Determine Concrete Shear Capacity Vc=Acv*α_c*(f'c) $^{1/2}$ — Vc = 2077.2 kips

Determine Shear Carried by Steel Vs=Vu/ϕ -Vc — Vs = 1336.1 kips

Determine Required Shear Reinforcing ρ=Vs/(fy*Acv) — ρ = 0.0015

21.6.5.3 Shear Reinforcing Requirements — ρ_n = **0.0025** — MINIMUM STEEL GOVERNS

2.0b) ACI 349 - 11.10.6 Equation 11-31 Requirements

Determine Concrete Shear Capacity — Vc = 2317.1 kips — Vc=3.3*(f'$_c$)$^{0.5}$*(0.8*t_w*l_w)+F_t*0.8*l_w/(4*l_w)

Determine Shear Carried by Steel Vs=Vu/ϕ -Vc — Vs = 1096.2 kips

Determine Required Shear Reinforcing — ρ = 0.0016 — ρ=Vs/(0.8*l_w*t_w*144*fy)

11.10.6 - Equation 11-31 Shear Reinforcing Requirements — ρ_n = **0.0025** — MINIMUM STEEL GOVERNS

2.0c) ACI 349 - 11.10.6 Equation 11-32 Requirements

Check Bounding Case Mu/Vu - l_w/2 = 4.14 — **Equation 11-32 APPLICABLE**

Determine Concrete Shear Capacity — Vc= 4800.80982 — Vc=[0.6*f'$_c^{0.5}$+l_w*(1.25*f'$_c^{0.5}$+0.2*Ft*1000/(l_w*t_w*144))/(Mu/Vu-l_w/2)]*t_w*0.8*l_w*144/1000

Determine Shear Carried by Steel — Vs = 0 — Vs=Vu/ϕ -Vc

Determine Required Shear Reinforcing Requirements — ρ = 0.0000 — ρ=Vs/(0.8*l_w*t_w*144*fy)

11.10.6 - Equation 11-32 Shear Reinforcing Requirements — ρ_n = **0.0025** — **MINIMUM STEEL GOVERNS**

2.0d) Horizontal Shear Reinforcing Requirements (max of 2a, 2b, 2c) — ρ_n = **0.0025**

2.0e) Select Horizontal Shear Reinforcing — **Asn required per ft on each face = 0.72 in^2/ft each face** — (ρ_n*12*t_w*12/2)

Use 1-#11@12"c/c EF — **Asn provided = 1.56 in^2/ft each face** — ρ_n **(prov)= 0.005416667**

2.0f) Check Demand / Capacity Ratio for In-Plane Shear:

D/C = 0.50 — D/C=(Vu/ϕ)/[Vc+(Asn*2*fy*l_w*t_w*144/(12*t_w*12))]

3.0 Vertical Reinforcing Requirements

3.0a) ACI 349 21.6.5.5 and 11.10.9.4 - Minimum vertical reinforcing ratio : — hw/lw = 2.27

If h_w/l_w>2.0, use: $\rho_{v\,min}$ =0.0025+0.5(2.5-h_w/l_w)(ρ_n-0.0025)<=ρ_n

ρ_v **(min) = 0.0025** — If h_w/l_w<=2.0, use: ρ_v>=ρ_n

3.0b) Check Shear Friction Requirements

In plane shear per foot of wall: 80.31 kips/ft (Vu/l_w)

Transverse shear per ft of wall: 20.00 kips/ft (Vz)

Resultant Shear 82.77 kips/ft $[(\text{in-plane shear})^2+(\text{transverse shear})^2]^{0.5}$

Calculate limiting shear friction strength at joint per ACI 349-11.7.5:

Vn<.2f'cAv for f'c = 5000 psi Vn=1000Av
Vn<800Av The limiting value of 800Av controls

Vn (MAX) = 460.8 kips/ft **Vn(MAX>Resultant shear .....OK**

Calculate shear friction reinforcing requirements per ACI 349 - 11.7.4.1:

Vn = Avf*fy*μ μ = 1.0 for concrete placed against hardened concrete intentionally roughened to a full amplitude of 1/4 inch (ACI 349-11.7.9)

Avf = Vu/2*ϕ*μ*fy (steel required per face)
Avf = 0.81 in^2/ft (steel required on each face for shear friction))

Calculate steel required for net Tension force

At = T/2*ϕ*fy*lw
At = 0.82 in^2/ft (steel required on each face for direct tension)

Steel Requirements for Shear Friction Avf + At

Av = 1.63 in^2/ft (steel required on each face for shear friction + direct tension)

ρv(req'd) = 0.0057 $(\rho_{v\ req'd}=(2*Av)/(12*t_w*12)$

3.0c) Vertical Reinforcing Requirements (max of 3a,3b) ρ_v **= 0.0057**

3.0d) Select Vertical Reinforcing **Asv required per ft on each face = 1.63 in²/ft each face** $(\rho_{v\ min}*12*t_w*12/2)$

Use 1-#11@6"c/c EF Asv provided = 3.12 in²/ft each face ρ_v **(prov)= 0.010833333**

3.0e) Perform Strain-Compatible Section Analysis - For Axial Force (Tension) **Ft =** -2124 kips

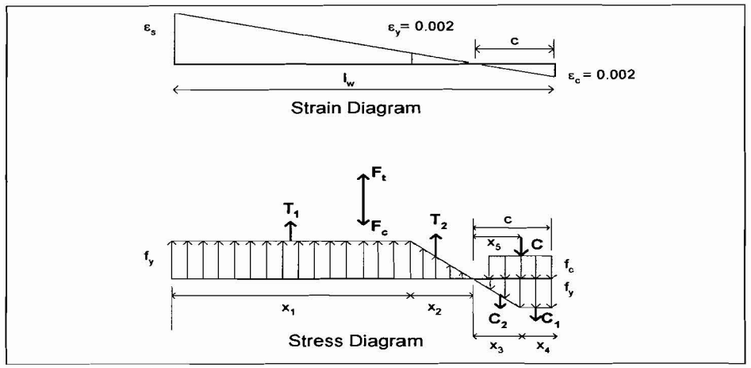

ϕ : Strength reduction factor (= 0.9 for tension, ACI 349 9.3.2.2), ϕ = 0.9
c : Distance from compression face to neutral axis (ft)
l_w : Length of wall (ft)
$\varepsilon_{s\_max} = [(l_w - c) / c] * \varepsilon_c$
$X_1 = l_w - c - X_2$ (ft) (length of wall with tension steel reinforcing steel strain > ε_y)
$X_2 = X_3 = (\varepsilon_y / \varepsilon_c) * c$ (ft) (length of wall with tension / compression steel reinforcing steel strain < ε_y)
$X_4 = c - X_3$ (ft) (length of wall with compression steel reinforcing steel strain > ε_y)
$T_1 = X_1 * As * fy$ (kips)
$T_2 = C_2 = 0.5 * X_2 * As * fy$ (kips)
$C_1 = X_4 * As * fy$ (kips)
$C = 0.85 * 0.8 * c * t_w * f'_c * 144$ (kips)
Balanced condition : Tension = Compression, $T_1+T_2-C_2-C_1-C+Ft/\phi = 0$.
M_u : Total moment capacity = $\phi\{T_1(X_2+X_1/2) + T_2(X_2*2/3) + C(c-0.8*c/2) + F_t(l_w/2-c)/\phi + C_2(X_3*2/3) + C_1(X_3+X_4/2)\}$, (kip-ft)

Using Goal Seek to find "c" and "Mu"

c (ft)	l_w - c (ft)	ε_{s_max}	X_1 (ft)	$X_2=X_3$ (ft)	X_4 (ft)	T_1 (k)	$T_2=C_2$ (k)	C_1 (k)	C (k)	$T_1+T_2-C_2-C_1-C+F_t/\phi$	M_u (k-ft)
2.65	22.85	0.0172	20.19	2.65	0.00	7559	497	0	5199	0.000	74337

Verified that equations were correct

c (ft)	l_w - c (ft)	ε_{s_max}	X_1 (ft)	$X_2=X_3$ (ft)	X_4 (ft)	T_1 (k)	$T_2=C_2$ (k)	C_1 (k)	C (k)	$T_1+T_2-C_2-C_1-C+F_t/\phi$	M_u (k-ft)
4	21.5	0.0108	17.50	4.00	0.00	6552	748.8	0	7834	-3642	77114
3	22.5	0.0150	19.50	3.00	0.00	7300.8	561.6	0	5875	-934	74607
2	23.5	0.0235	21.50	2.00	0.00	8049.6	374.4	0	3917	1773	74665

Perform Strain-Compatible Section Analysis - For Axial Force (Comp) **Fc =** 0 kips

ϕ : Strength reduction factor (= 0.7 to 0.9 for comp, ACI 349 9.3.2.2), ϕ = 0.9000
If Fc<=0, ϕ=0.9; if Fc>0, $\phi=0.9-0.2*Fc/(0.1*Acv*144*f'_c/1000)$

Using Goal Seek to find "c" and "Mu"

c (ft)	l_w - c (ft)	ε_{s_max}	X_1 (ft)	X_2=X_3 (ft)	X_4 (ft)	T_1 (k)	T_2=C_2 (k)	C_1 (k)	C (k)	T_1+T_2-C_2-C_1-C+F_c/ϕ	M_u (k-ft)
3.53	21.97	0.0125	18.45	3.53	0.00	6906	660	0	6906	0.000	95198

Verified that equations were correct

c (ft)	l_w - c (ft)	ε_{s_max}	X_1 (ft)	X_2=X_3 (ft)	X_4 (ft)	T_1 (k)	T_2=C_2 (k)	C_1 (k)	C (k)	T_1+T_2-C_2-C_1-C+F_c/ϕ	M_u (k-ft)
3	22.5	0.0150	19.50	3.00	0.00	7300.8	561.6	0	5875	1426	95316
5	20.5	0.0082	15.50	5.00	0.00	5803.2	936	0	9792	-3989	98646
4	21.5	0.0108	17.50	4.00	0.00	6552	748.8	0	7834	-1282	95699

3.0f) Check Demand / Capacity Ratio for In-Plane Moment:

Vertical Reinforcing Ratio Provided by Design : ρ_v (prov)= 0.0108 1-#11@6"c/c EF ρ_v = (2*Asv)/(12*t_w*12)
D/C = (in-plane moment Mz) / (Min of Mu-ten, Mu-comp) D/C = 0.47 **Section Adequate**
Vertical Reinforcing Ratio Required for In-Plane Moment: $\rho_{vl\ req}$ = 0.0050 $\rho_{v\ req}$ = ρ_v*(D/C)

3.0g) Consider Out-of-Plane Moment:

Vertical Reinf Ratio Required for Out-of-Plane Bending: $\rho_{vt\ req}$ = 0.00160 (per face) $\rho f_y bd^2*(1-.59\rho f_y/f'_c)=Mu/\phi$ solve for ρ Ref. 2.2.19, Section 4-3

3.0h) Total Reinforcing required for axial force, in-plane and out of plane bending ρ_v = 0.0066 = $\rho_{vl}+\rho_{vt} > 2\rho_{vt}$

D/C = ρ_v(reqd) / ρ_v (prov) D/C = 0.61 **Section Adequate** = ρ_v(req'd) / ρ_v(prov)

4.0 Boundary Elements:

h_w / l_w = 2.27 Concrete Strain limited to .002 No Need To Check for Boundary Elements

5.0 Out-of-Plane Shear:

Nominal Shear Strength Provided by The Concrete Vc=2*(f'c)$^{1/2}$*b*d Vc = 73.0 kips/ft width of wall

Check Demand / Capacity Ratio: D/C = 0.32 No Shear Reinforcement Required
D/C = (out-of-plane shear Vz) / (0.85*Vc)

6.0 Tabulate Reinforcement Requirements And D/C Ratios:

Use 4 ft thick wall with 1-#11@12"c/c EF Horizontal Reinforcement
1-#11@6"c/c EF Vertical Reinforcement.

For Shear on Gross Section: D/C = 0.41
For In-Plane Shear: D/C = 0.50
For Out-of-Plane Shear: D/C = 0.32
Bending + axial Loads D/C = 0.61

Boundary Elements D/C= BOUNDARY ELEMENTS NOT REQUIRED

Transverse Wall COL 1-SCUT6a---D+L+SRSS

Design Loads			Shear Wall Section Properties			Concrete & Rebar Properties		
Axial Force (-Tension)	Ft =	0 kips	Height of Wall (segment)	h_w =	58 ft	Concrete Design Strength	f'c =	5000 psi
Axial Force (+Comp)	Fc =	4861 kips	Ht of Wall Between Floors	H =	58 ft	Concrete Strain	ε_c =	0.002
In plane shear	Vu =	1845 kips	Length of Wall (Segment)	l_w =	25.5 ft	Rebar Yield Strength	fy =	60 ksi
In plane Moment	Mz =	35421 ft-kips	Thickness of Wall	t_w =	4 ft	Rebar Yield Strain	ε_y =	0.002
			Shear Area of Wall (Segment)	Acv = l_w*t_w =	102 ft^2	Min Steel Required	ρ_{min} =	0.0025
						Concrete Cover		5 in
Out of plane shear	Vz =	20 kips/ft				(Use 5" = 2" clear cover + diameter of the outer layer rebar + 1/2 diameter of the inner layer rebar)		
Out of plane Moment	My =	183 ft-kips/ft (M22+M12)						

Note: For ACI 349, see Ref. 2.2.14, for sections 1.0 to 6.0 of this design subset.

1.0 Check Shear on gross section - ACI 349: 21.6.5.6

Nominal Shear Capacity = 8*Acv*(f'c) $^{1/2}$ — Vn (kips) = 8309

Factored Shear Load = Vu / ϕ — Vu/ϕ (kips)= 3075.0
(ϕ = .6 per ACI 349 - 9.3.4)

Demand Capacity Ratio
Check Code 21.6.5.6 Demand/Capacity Ratio — D/C = (Vu/ϕ)/Vn — D/C = 0.37 **SHEAR WALL THICKNESS OK**

2.0 Horizontal Reinforcing Requirements

2.0a) ACI 349 - 21.6.5.3 Requirements

Determine α_c : h_w / l_w = 2.27 — α_c = 2 — α_c=3 for h_w/l_w<1.5, α_c varies linearly from 3 for h_w/l_w=1.5 to 2 for h_w/l_w=2.

Determine Concrete Shear Capacity Vc=Acv*α_c*(f'c) $^{1/2}$ — Vc = 2077.2 kips

Determine Shear Carried by Steel Vs=Vu/ϕ -Vc — Vs = 997.8 kips

Determine Required Shear Reinforcing ρ=Vs/(fy*Acv) — ρ = 0.0011

21.6.5.3 Shear Reinforcing Requirements — **ρ_n = 0.0025** MINIMUM STEEL GOVERNS

2.0b) ACI 349 - 11.10.6 Equation 11-31 Requirements

Determine Concrete Shear Capacity — Vc = 2741.9 kips — Vc=3.3*(f'$_c$)$^{0.5}$*(0.8*t_w*l_w)+F_t*0.8*l_w/(4*l_w)

Determine Shear Carried by Steel Vs=Vu/ϕ -Vc — Vs = 333.1 kips

Determine Required Shear Reinforcing — ρ = 0.0005 — ρ=Vs/(0.8*l_w*t_w*144*fy)

11.10.6 - Equation 11-31 Shear Reinforcing Requirements — **ρ_n = 0.0025** MINIMUM STEEL GOVERNS

2.0c) ACI 349 - 11.10.6 Equation 11-32 Requirements

Check Bounding Case Mu/Vu - l_w/2 = 6.45 **Equation 11-32 APPLICABLE**

Determine Concrete Shear Capacity — Vc= 4605.6495 — Vc=[0.6*f'$_c$$^{0.5}$+$l_w$*(1.25*f'$_c$$^{0.5}$+0.2*Ft*1000/($l_w$*$t_w$*144))/(Mu/Vu-$l_w$/2)]*$t_w$*0.8*$l_w$*144/1000

Determine Shear Carried by Steel — Vs = 0 — Vs=Vu/ϕ -Vc

Determine Required Shear Reinforcing Requirements — ρ = 0.0000 — ρ=Vs/(0.8*l_w*t_w*144*fy)

11.10.6 - Equation 11-32 Shear Reinforcing Requirements — **ρ_n = 0.0025 MINIMUM STEEL GOVERNS**

2.0d) Horizontal Shear Reinforcing Requirements (max of 2a, 2b, 2c) — **ρ_n = 0.0025**

2.0e) Select Horizontal Shear Reinforcing **Asn required per ft on each face = 0.72 in^2/ft each face** (ρ_n*12*t_w*12/2)

Use 1-#11@12"c/c EF Asn provided = 1.56 in^2/ft each face **ρ_n (prov)=0.00542**

2.0f) Check Demand / Capacity Ratio for In-Plane Shear:

D/C = 0.45 — D/C=(Vu/ϕ)/[Vc+(Asn*2*fy*l_w*t_w*144/(12*t_w*12))]

3.0 Vertical Reinforcing Requirements

3.0a) ACI 349 21.6.5.5 and 11.10.9.4 - Minimum vertical reinforcing ratio : hw/lw = 2.27

If h_w/l_w>2.0, use: $\rho_{v\,min}$=0.0025+0.5(2.5-h_w/l_w)(ρ_n-0.0025)<=ρ_n
ρ_v (min) =0.0025 If h_w/l_w<=2.0, use: ρ_v>=ρ_n

3.0b) Check Shear Friction Requirements

In plane shear per foot of wall:	72.35 kips/ft	(Vu/l_w)
Transverse shear per ft of wall:	20.00 kips/ft	(Vz)
Resultant Shear	75.07 kips/ft	$[(\text{in-plane shear})^2+(\text{transverse shear})^2]^{0.5}$

Calculate limiting shear friction strength at joint per ACI 349-11.7.5:

Vn<.2f'cAv for f'c = 5000 psi Vn=1000Av
Vn<800Av The limiting value of 800Av controls

Vn (MAX) = 460.8 kips/ft **Vn(MAX>Resultant shear .....OK**

Calculate shear friction reinforcing requirements per ACI 349 - 11.7.4.1:

Vn = Avf*fy*μ μ = 1.0 for concrete placed against hardened concrete intentionally roughened to a full amplitude of 1/4 inch (ACI 349-11.7.9)

Avf = Vu/2*ϕ*μ*fy (steel required per face)
Avf = 0.74 in^2/ft (steel required on each face for shear friction))

Calculate steel required for net Tension force

At = T/2*ϕ*fy*lw
At = 0.00 in^2/ft (steel required on each face for direct tension)

Steel Requirements for Shear Friction Avf + At

Av = 0.74 in^2/ft (steel required on each face for shear friction + direct tension)

ρv(req'd) = 0.0026 ($\rho_{v\ req'd}$=(2*Av)/(12*t_w*12)

3.0c) Vertical Reinforcing Requirements (max of 3a,3b) ρ_v **= 0.0026**

3.0d) Select Vertical Reinforcing **Asv required per ft on each face = 0.74 in^2/ft each face** ($\rho_{v\ min}$*12*t_w*12/2)

Use 1-#11@6"c/c EF **Asv provided = 3.12 in^2/ft each face** **ρ_v (prov)= 0.01083**

3.0e) Perform Strain-Compatible Section Analysis - For Axial Force (Tension) **Ft =** 0 kips

ϕ : Strength reduction factor (= 0.9 for tension, ACI 349 9.3.2.2), ϕ = 0.9
c : Distance from compression face to neutral axis (ft)
l_w : Length of wall (ft)
ε_{s_max} = [(l_w -c) / c] * ε_c
$X_1 = l_w - c - X_2$ (ft) (length of wall with tension steel reinforcing steel strain > ε_y)
$X_2 = X_3 = (\varepsilon_y / \varepsilon_c) * c$ (ft) (length of wall with tension / compression steel reinforcing steel strain < ε_y)
$X_4 = c - X_3$ (ft) (length of wall with compression steel reinforcing steel strain > ε_y)
$T_1 = X_1 * As * fy$ (kips)
$T_2 = C_2 = 0.5 * X_2 * As * fy$ (kips)
$C_1 = X_4 * As * fy$ (kips)
$C = 0.85 * 0.8 * c * t_w * f'_c * 144$ (kips)
Balanced condition : Tension = Compression, $T_1+T_2-C_2-C_1-C+Ft/\phi = 0$.
M_u : Total moment capacity = $\phi\{T_1(X_2+X_1/2) + T_2(X_2*2/3) + C(c-0.8*c/2) + F_t(l_w/2-c)/\phi + C_2(X_3*2/3) + C_1(X_3+X_4/2)\}$, (kip-ft)

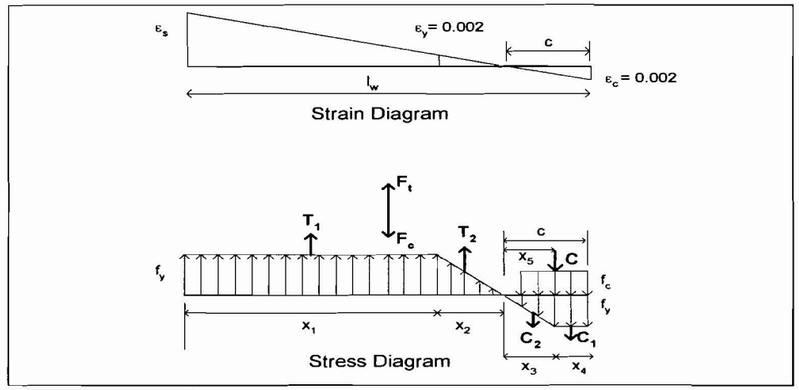

Using Goal Seek to find "c" and "Mu"

c (ft)	l_w - c (ft)	ε_{s_max}	X_1 (ft)	X_2=X_3 (ft)	X_4 (ft)	T_1 (k)	T_2=C_2 (k)	C_1 (k)	C (k)	$T_1+T_2-C_2-C_1-C+F_t/\phi$	M_u (k-ft)
3.53	21.97	0.0125	18.45	3.53	0.00	6906	660	0	6906	0.000	95198

Verified that equations were correct

c (ft)	l_w - c (ft)	ε_{s_max}	X_1 (ft)	X_2=X_3 (ft)	X_4 (ft)	T_1 (k)	T_2=C_2 (k)	C_1 (k)	C (k)	$T_1+T_2-C_2-C_1-C+F_t/\phi$	M_u (k-ft)
3	22.5	0.0150	19.50	3.00	0.00	7300.8	561.6	0	5875	1426	95316

5	20.5	0.0082	15.50	5.00	0.00	5803.2	936	0	9792	-3989	98646
4	21.5	0.0108	17.50	4.00	0.00	6552	748.8	0	7834	-1282	95699

Perform Strain-Compatible Section Analysis - For Axial Force (Comp) **Fc =** 4861 kips

ϕ : Strength reduction factor (= 0.7 to 0.9 for comp, ACI 349 9.3.2.2), ϕ = 0.7676
If Fc<=0, ϕ=0.9; if Fc>0, ϕ=0.9-0.2*Fc/(0.1*Acv*144*f'_c/1000)

Using Goal Seek to find "c" and "Mu"

c (ft)	l_w - c (ft)	ε_{s_max}	X_1 (ft)	X_2=X_3 (ft)	X_4 (ft)	T_1 (k)	T_2=C_2 (k)	C_1 (k)	C (k)	T_1+T_2-C_2-C_1-C+F_c/ϕ	M_u (k-ft)
5.87	19.63	0.0067	13.77	5.87	0.00	5155	1098	0	11487	0.000	121543

Verified that equations were correct

c (ft)	l_w - c (ft)	ε_{s_max}	X_1 (ft)	X_2=X_3 (ft)	X_4 (ft)	T_1 (k)	T_2=C_2 (k)	C_1 (k)	C (k)	T_1+T_2-C_2-C_1-C+F_c/ϕ	M_u (k-ft)
4	21.5	0.0108	17.50	4.00	0.00	6552	748.8	0	7834	5051	124156
5	20.5	0.0082	15.50	5.00	0.00	5803.2	936	0	9792	2344	121809
6	19.5	0.0065	13.50	6.00	0.00	5054.4	1123.2	0	11750	-363	121649

3.0f) Check Demand / Capacity Ratio for In-Plane Moment:

Vertical Reinforcing Ratio Provided by Design : ρ_v (prov)= 0.0108 1-#11@6"c/c EF ρ_v = (2*Asv)/(12*t_w*12)
D/C = (in-plane moment Mz) / (Min of Mu-ten, Mu-comp) D/C = 0.37 **Section Adequate**
Vertical Reinforcing Ratio Required for In-Plane Moment: $\rho_{vt\ req}$ = 0.0040 $\rho_{v\ req}$ = ρ_v*(D/C)

3.0g) Consider Out-of-Plane Moment:

Vertical Reinf Ratio Required for Out-of-Plane Bending: $\rho_{vt\ req}$ = 0.00186 (per face) $\rho f_y bd^2(1-.59\rho f_y/f'_c)=Mu/\phi$ solve for ρ Ref. 2.2.19, Section 4-3

3.0h) Total Reinforcing required for axial force, in-plane and out of plane bending ρ_v = 0.0059 = $\rho_{vl}+\rho_{vt} > 2\rho_{vt}$

D/C = ρ_v(reqd) / ρ_v (prov) D/C = 0.54 **Section Adequate** = ρ_{vt}(req'd) / ρ_v(prov)

4.0 Boundary Elements:

h_w / l_w = 2.27 Concrete Strain limited to .002 No Need To Check for Boundary Elements

5.0 Out-of-Plane Shear:

Nominal Shear Strength Provided by The Concrete Vc=2*(f'c)$^{1/2}$*b*d Vc = 73.0 kips/ft width of wall

Check Demand / Capacity Ratio: D/C = 0.32 No Shear Reinforcement Required
D/C = (out-of-plane shear Vz) / (0.85*Vc)

6.0 Tabulate Reinforcement Requirements And D/C Ratios:

Use 4 ft thick wall with 1-#11@12"c/c EF Horizontal Reinforcement
1-#11@6"c/c EF Vertical Reinforcement.

For Shear on Gross Section: D/C = 0.37
For In-Plane Shear: D/C = 0.45
For Out-of-Plane Shear: D/C = 0.32
Bending + axial Loads D/C = 0.54

Boundary Elements D/C= BOUNDARY ELEMENTS NOT REQUIRED

Transverse Wall COL 1-SCUT6b---D+L-SRSS

Design Loads				Shear Wall Section Properties				Concrete & Rebar Properties			
Axial Force (-Tension)	Ft =	-2118	kips	Height of Wall (segment)	h_w =	58	ft	Concrete Design Strength	f'c =	5000	psi
Axial Force (+Comp)	Fc =	0	kips	Ht of Wall Between Floors	H =	58	ft	Concrete Strain	ε_c =	0.002	
In plane shear	Vu =	1844	kips	Length of Wall (Segment)	l_w =	25.5	ft	Rebar Yield Strength	fy =	60	ksi
In plane Moment	Mz =	35320	ft-kips	Thickness of Wall	t_w =	4	ft	Rebar Yield Strain	ε_y =	0.002	
				Shear Area of Wall (Segment)	Acv = l_w*t_w =	102	ft^2	Min Steel Required	ρ_{min} =	0.0025	
								Concrete Cover		5	in
Out of plane shear	Vz =	20	kips/ft					(Use 5" = 2" clear cover + diameter of the outer layer rebar + 1/2 diameter of the inner layer rebar)			
Out of plane Moment	My =	158	ft-kips/ft (M22+M12)								

Note: For ACI 349, see Ref. 2.2.14, for sections 1.0 to 6.0 of this design subset.

1.0 Check Shear on gross section - ACI 349: 21.6.5.6

Nominal Shear Capacity = 8*Acv*(f'c) $^{1/2}$ Vn (kips) = 8309

Factored Shear Load = Vu / ϕ Vu/ϕ (kips)= 3073.3
(ϕ = .6 per ACI 349 - 9.3.4)

Demand Capacity Ratio
Check Code 21.6.5.6 Demand/Capacity Ratio D/C = (Vu/ϕ)/Vn D/C = 0.37 **SHEAR WALL THICKNESS OK**

2.0 Horizontal Reinforcing Requirements

2.0a) ACI 349 - 21.6.5.3 Requirements

Determine α_c : h_w / l_w = 2.27 α_c = 2 α_c=3 for h_w/l_w<1.5, α_c varies linearly from 3 for h_w/l_w=1.5 to 2 for h_w/l_w=2.

Determine Concrete Shear Capacity Vc=Acv*α_c*(f'c) $^{1/2}$ Vc = 2077.2 kips

Determine Shear Carried by Steel Vs=Vu/ϕ -Vc Vs = 996.1 kips

Determine Required Shear Reinforcing ρ=Vs/(fy*Acv) ρ = 0.0011

21.6.5.3 Shear Reinforcing Requirements **ρ_n = 0.0025** MINIMUM STEEL GOVERNS

2.0b) ACI 349 - 11.10.6 Equation 11-31 Requirements

Determine Concrete Shear Capacity Vc = 2318.3 kips Vc=3.3*(f'$_c$)$^{0.5}$*(0.8*t_w*l_w)+F_t*0.8*l_w/(4*l_w)

Determine Shear Carried by Steel Vs=Vu/ϕ -Vc Vs = 755.0 kips

Determine Required Shear Reinforcing ρ = 0.0011 ρ=Vs/(0.8*l_w*t_w*144*fy)

11.10.6 - Equation 11-31 Shear Reinforcing Requirements **ρ_n = 0.0025** MINIMUM STEEL GOVERNS

2.0c) ACI 349 - 11.10.6 Equation 11-32 Requirements

Check Bounding Case Mu/Vu - l_w/2 = 6.40 **Equation 11-32 APPLICABLE**

Determine Concrete Shear Capacity Vc= 3284.72087 Vc=[0.6*f'$_c^{0.5}$+l_w*(1.25*f'$_c^{0.5}$+0.2*Ft*1000/(l_w*t_w*144))/(Mu/Vu-l_w/2)]*t_w*0.8*l_w*144/1000

Determine Shear Carried by Steel Vs = 0 Vs=Vu/ϕ -Vc

Determine Required Shear Reinforcing Requirements ρ = 0.0000 ρ=Vs/(0.8*l_w*t_w*144*fy)

11.10.6 - Equation 11-32 Shear Reinforcing Requirements **ρ_n = 0.0025 MINIMUM STEEL GOVERNS**

2.0d) Horizontal Shear Reinforcing Requirements (max of 2a, 2b, 2c) **ρ_n = 0.0025**

2.0e) Select Horizontal Shear Reinforcing **Asn required per ft on each face = 0.72 in^2/ft each face** (ρ_n*12*t_w*12/2)

Use 1-#11@12"c/c EF Asn provided = 1.56 in^2/ft each face ρ_n (prov)=0.00542

2.0f) Check Demand / Capacity Ratio for In-Plane Shear:

D/C = 0.45 D/C=(Vu/ϕ)/[Vc+(Asn*2*fy*l_w*t_w*144/(12*t_w*12))]

3.0 Vertical Reinforcing Requirements

3.0a) ACI 349 21.6.5.5 and 11.10.9.4 - Minimum vertical reinforcing ratio : hw/lw = 2.27

If h_w/l_w>2.0, use: $\rho_{v\,min}$ =0.0025+0.5(2.5-h_w/l_w)(ρ_n-0.0025)<=ρ_n
ρ_v (min) =0.0025 If h_w/l_w<=2.0, use: ρ_v>=ρ_n

3.0b) Check Shear Friction Requirements

In plane shear per foot of wall:	72.31 kips/ft	(Vu/l_w)
Transverse shear per ft of wall:	20.00 kips/ft	(Vz)
Resultant Shear	75.03 kips/ft	$[(\text{in-plane shear})^2+(\text{transverse shear})^2]^{0.5}$

Calculate limiting shear friction strength at joint per ACI 349-11.7.5:

Vn<.2f'cAv for f'c = 5000 psi Vn=1000Av
Vn<800Av — The limiting value of 800Av controls

Vn (MAX) = 460.8 kips/ft **Vn(MAX>Resultant shear .....OK**

Calculate shear friction reinforcing requirements per ACI 349 - 11.7.4.1:

Vn = Avf*fy*μ — μ = 1.0 for concrete placed against hardened concrete intentionally roughened to a full amplitude of 1/4 inch (ACI 349-11.7.9)

Avf = Vu/2*ϕ*μ*fy (steel required per face)
Avf = 0.74 in^2/ft (steel required on each face for shear friction))

Calculate steel required for net Tension force

At = T/2*ϕ*fy*lw
At = 0.81 in^2/ft (steel required on each face for direct tension)

Steel Requirements for Shear Friction Avf + At

Av = 1.55 in^2/ft (steel required on each face for shear friction + direct tension)

ρv(req'd) = 0.0054 $(\rho_{v\ req'd}=(2*Av)/(12*t_w*12)$

3.0c) Vertical Reinforcing Requirements (max of 3a,3b) ρ_v **= 0.0054**

3.0d) Select Vertical Reinforcing **Asv required per ft on each face =** **1.55** **in²/ft each face** $(\rho_{v\ min}*12*t_w*12/2)$

Use 1-#11@6"c/c EF **Asv provided = 3.12** **in²/ft each face** ρ_v **(prov)= 0.01083**

3.0e) Perform Strain-Compatible Section Analysis - For Axial Force (Tension) **Ft =** -2118 kips

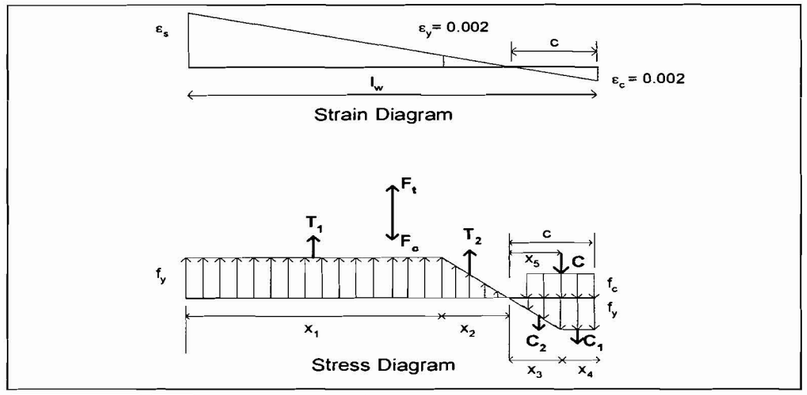

ϕ : Strength reduction factor (= 0.9 for tension, ACI 349 9.3.2.2), ϕ = 0.9
c : Distance from compression face to neutral axis (ft)
l_w : Length of wall (ft)
$\varepsilon_{s\_max} = [(l_w-c) / c] * \varepsilon_c$
$X_1 = l_w - c - X_2$ (ft) (length of wall with tension steel reinforcing steel strain > ε_y)
$X_2 = X_3 = (\varepsilon_y / \varepsilon_c) * c$ (ft) (length of wall with tension / compression steel reinforcing steel strain < ε_y)
$X_4 = c - X_3$ (ft) (length of wall with compression steel reinforcing steel strain > ε_y)
$T_1 = X_1 * As * fy$ (kips)
$T_2 = C_2 = 0.5 * X_2 * As * fy$ (kips)
$C_1 = X_4 * As * fy$ (kips)
$C = 0.85 * 0.8 * c * t_w * f'_c * 144$ (kips)
Balanced condition : Tension = Compression, $T_1+T_2-C_2-C_1-C+Ft/\phi = 0$.
M_u : Total moment capacity = $\phi\{T_1(X_2+X_1/2) + T_2(X_2*2/3) + C(c-0.8*c/2) + F_t(l_w/2-c)/\phi + C_2(X_3*2/3) + C_1(X_3+X_4/2)\}$, (kip-ft)

Using Goal Seek to find "c" and "Mu"

c (ft)	l_w - c (ft)	ε_{s_max}	X_1 (ft)	$X_2=X_3$ (ft)	X_4 (ft)	T_1 (k)	$T_2=C_2$ (k)	C_1 (k)	C (k)	$T_1+T_2-C_2-C_1-C+F_t/\phi$	M_u (k-ft)
2.66	22.84	0.0172	20.19	2.66	0.00	7557	497	0	5204	0.000	74399

Verified that B79equations were correct

c (ft)	l_w - c (ft)	ε_{s_max}	X_1 (ft)	X_2=X_3 (ft)	X_4 (ft)	T_1 (k)	T_2=C_2 (k)	C_1 (k)	C (k)	T_1+T_2-C_2-C_1-C+F_c/ϕ	M_u (k-ft)
4	21.5	0.0108	17.50	4.00	0.00	6552	748.8	0	7834	-3635	77167
3	22.5	0.0150	19.50	3.00	0.00	7300.8	561.6	0	5875	-928	74666
2	23.5	0.0235	21.50	2.00	0.00	8049.6	374.4	0	3917	1779	74729

Perform Strain-Compatible Section Analysis - For Axial Force (Comp) **Fc =** 0 kips

ϕ : Strength reduction factor (= 0.7 to 0.9 for comp, ACI 349 9.3.2.2), ϕ = 0.9000
If Fc<=0, ϕ=0.9; if Fc>0, ϕ=0.9-0.2*Fc/(0.1*Acv*144*f'_c/1000)

Using Goal Seek to find "c" and "Mu"

c (ft)	l_w - c (ft)	ε_{s_max}	X_1 (ft)	X_2=X_3 (ft)	X_4 (ft)	T_1 (k)	T_2=C_2 (k)	C_1 (k)	C (k)	T_1+T_2-C_2-C_1-C+F_c/ϕ	M_u (k-ft)
3.53	21.97	0.0125	18.45	3.53	0.00	6906	660	0	6906	0.000	95198

Verified that equations were correct

c (ft)	l_w - c (ft)	ε_{s_max}	X_1 (ft)	X_2=X_3 (ft)	X_4 (ft)	T_1 (k)	T_2=C_2 (k)	C_1 (k)	C (k)	T_1+T_2-C_2-C_1-C+F_c/ϕ	M_u (k-ft)
3	22.5	0.0150	19.50	3.00	0.00	7300.8	561.6	0	5875	1426	95316
5	20.5	0.0082	15.50	5.00	0.00	5803.2	936	0	9792	-3989	98646
4	21.5	0.0108	17.50	4.00	0.00	6552	748.8	0	7834	-1282	95699

3.0f) Check Demand / Capacity Ratio for In-Plane Moment:

Vertical Reinforcing Ratio Provided by Design : ρ_v(prov)= 0.0108 1-#11@6"c/c EF ρ_v = (2*Asv)/(12*t_w*12)
D/C = (in-plane moment Mz) / (Min of Mu-ten, Mu-comp) D/C = 0.47 **Section Adequate**
Vertical Reinforcing Ratio Required for In-Plane Moment: $\rho_{vl\ req}$ = 0.0051 $\rho_{v\ req}$ = ρ_v*(D/C)

3.0g) Consider Out-of-Plane Moment:

Vertical Reinf Ratio Required for Out-of-Plane Bending: $\rho_{vt\ req}$ = 0.00160 (per face) $\rho f_y bd^2(1-.59\rho f_y/f'_c)=Mu/\phi$ solve for ρ Ref. 2.2.19, Section 4-3

3.0h) Total Reinforcing required for axial force, in-plane and out of plane bending ρ_v = 0.0067 = $\rho_{vl}+\rho_{vt} > 2\rho_{vt}$

D/C = ρ_v(reqd) / ρ_v (prov) D/C = 0.62 **Section Adequate** = ρ_{vt}(req'd) / ρ_v(prov)

4.0 Boundary Elements:

h_w / l_w = 2.27 Concrete Strain limited to .002 No Need To Check for Boundary Elements

5.0 Out-of-Plane Shear:

Nominal Shear Strength Provided by The Concrete Vc=2*(f'c)$^{1/2}$*b*d Vc = 73.0 kips/ft width of wall

Check Demand / Capacity Ratio: D/C = 0.32 No Shear Reinforcement Required
D/C = (out-of-plane shear Vz) / (0.85*Vc)

6.0 Tabulate Reinforcement Requirements And D/C Ratios:

Use 4 ft thick wall with 1-#11@12"c/c EF Horizontal Reinforcement
1-#11@6"c/c EF Vertical Reinforcement.

For Shear on Gross Section:	**D/C =**	**0.37**
For In-Plane Shear:	**D/C =**	**0.45**
For Out-of-Plane Shear:	**D/C =**	**0.32**
Bending + axial Loads	**D/C =**	**0.62**

Boundary Elements **D/C=** **BOUNDARY ELEMENTS NOT REQUIRED**

Transverse Wall COL 1-SCUT6b---D+L+SRSS

Design Loads			Shear Wall Section Properties			Concrete & Rebar Properties		
Axial Force (-Tension)	Ft =	0 kips	Height of Wall (segment)	h_w =	58 ft	Concrete Design Strength	f'c =	5000 psi
Axial Force (+Comp)	Fc =	4875 kips	Ht of Wall Between Floors	H =	58 ft	Concrete Strain	ε_c =	0.002
In plane shear	Vu =	2055 kips	Length of Wall (Segment)	l_w =	25.5 ft	Rebar Yield Strength	fy =	60 ksi
In plane Moment	Mz =	34651 ft-kips	Thickness of Wall	t_w =	4 ft	Rebar Yield Strain	ε_y =	0.002
			Shear Area of Wall (Segment)	Acv = l_w*t_w =	102 ft^2	Min Steel Required	ρ_{min} =	0.0025
						Concrete Cover		5 in
Out of plane shear	Vz =	20 kips/ft				(Use 5" = 2" clear cover + diameter of the outer layer rebar + 1/2 diameter of the inner layer rebar)		
Out of plane Moment	My =	183 ft-kips/ft (M22+M12)						

Note: For ACI 349, see Ref. 2.2.14, for sections 1.0 to 6.0 of this design subset.

1.0 Check Shear on gross section - ACI 349: 21.6.5.6

Nominal Shear Capacity = 8*Acv*(f'c) $^{1/2}$ Vn (kips) = 8309

Factored Shear Load = Vu / ϕ Vu/ϕ (kips)= 3425.0
(ϕ = .6 per ACI 349 - 9.3.4)

Demand Capacity Ratio
Check Code 21.6.5.6 Demand/Capacity Ratio D/C = (Vu/ϕ)/Vn D/C = 0.41 **SHEAR WALL THICKNESS OK**

2.0 Horizontal Reinforcing Requirements

2.0a) ACI 349 - 21.6.5.3 Requirements

Determine α_c : h_w / l_w = 2.27 α_c = 2 α_c=3 for h_w/l_w<1.5, α_c varies linearly from 3 for h_w/l_w=1.5 to 2 for h_w/l_w=2.

Determine Concrete Shear Capacity Vc=Acv*α_c*(f'c) $^{1/2}$ Vc = 2077.2 kips

Determine Shear Carried by Steel Vs=Vu/ϕ -Vc Vs = 1347.8 kips

Determine Required Shear Reinforcing ρ=Vs/(fy*Acv) ρ = 0.0015

21.6.5.3 Shear Reinforcing Requirements **ρ_n = 0.0025** MINIMUM STEEL GOVERNS

2.0b) ACI 349 - 11.10.6 Equation 11-31 Requirements

Determine Concrete Shear Capacity Vc = 2741.9 kips Vc=3.3*$(f'_c)^{0.5}$*(0.8*t_w*l_w)+F_t*0.8*l_w/(4*l_w)

Determine Shear Carried by Steel Vs=Vu/ϕ -Vc Vs = 683.1 kips

Determine Required Shear Reinforcing ρ = 0.0010 ρ=Vs/(0.8*l_w*t_w*144*fy)

11.10.6 - Equation 11-31 Shear Reinforcing Requirements **ρ_n = 0.0025** MINIMUM STEEL GOVERNS

2.0c) ACI 349 - 11.10.6 Equation 11-32 Requirements

Check Bounding Case Mu/Vu - l_w/2 = 4.11 **Equation 11-32 APPLICABLE**

Determine Concrete Shear Capacity Vc= 6939.56453 Vc=[0.6*$f_c^{0.5}$+l_w*(1.25*$f_c^{0.5}$+0.2*Ft*1000/(l_w*t_w*144))/(Mu/Vu-l_w/2)]*t_w*0.8*l_w*144/1000

Determine Shear Carried by Steel Vs = 0 Vs=Vu/ϕ -Vc

Determine Required Shear Reinforcing Requirements ρ = 0.0000 ρ=Vs/(0.8*l_w*t_w*144*fy)

11.10.6 - Equation 11-32 Shear Reinforcing Requirements **ρ_n = 0.0025 MINIMUM STEEL GOVERNS**

2.0d) Horizontal Shear Reinforcing Requirements (max of 2a, 2b, 2c) **ρ_n = 0.0025**

2.0e) Select Horizontal Shear Reinforcing **Asn required per ft on each face = 0.72 in^2/ft each face** (ρ_n*12*t_w*12/2)

Use 1-#11@12"c/c EF Asn provided = 1.56 in^2/ft each face ρ_n (prov)=0.00542

2.0f) Check Demand / Capacity Ratio for In-Plane Shear:

D/C = 0.50 D/C=(Vu/ϕ)/[Vc+(Asn*2*fy*l_w*t_w*144/(12*t_w*12))]

3.0 Vertical Reinforcing Requirements

3.0a) ACI 349 21.6.5.5 and 11.10.9.4 - Minimum vertical reinforcing ratio : hw/lw = 2.27

If h_w/l_w>2.0, use: $\rho_{v\,min}$ =0.0025+0.5(2.5-h_w/l_w)(ρ_n-0.0025)<=ρ_n

ρ_v (min) =0.0025 If h_w/l_w<=2.0, use: ρ_v>=ρ_n

3.0b) Check Shear Friction Requirements

In plane shear per foot of wall:	80.59 kips/ft	(Vu/l_w)
Transverse shear per ft of wall:	20.00 kips/ft	(Vz)
Resultant Shear	83.03 kips/ft	$[(\text{in-plane shear})^2+(\text{transverse shear})^2]^{0.5}$

Calculate limiting shear friction strength at joint per ACI 349-11.7.5:

Vn<.2f'cAv for f'c = 5000 psi Vn=1000Av
Vn<800Av The limiting value of 800Av controls

Vn (MAX) = 460.8 kips/ft **Vn(MAX>Resultant shear .....OK**

Calculate shear friction reinforcing requirements per ACI 349 - 11.7.4.1:

Vn = Avf*fy*μ μ = 1.0 for concrete placed against hardened concrete intentionally roughened to a full amplitude of 1/4 inch (ACI 349-11.7.9)

Avf = Vu/2*ϕ*μ*fy (steel required per face)
Avf = 0.81 in^2/ft (steel required on each face for shear friction))

Calculate steel required for net Tension force

At = T/2*ϕ*fy*lw
At = 0.00 in^2/ft (steel required on each face for direct tension)

Steel Requirements for Shear Friction Avf + At

Av = 0.81 in^2/ft (steel required on each face for shear friction + direct tension)

ρv(req'd) = 0.0028 ($\rho_{v\ req'd}$=(2*Av)/(12*t_w*12)

3.0c) Vertical Reinforcing Requirements (max of 3a,3b) **ρ_v = 0.0028**

3.0d) Select Vertical Reinforcing **Asv required per ft on each face = 0.81 in^2/ft each face** ($\rho_{v\ min}$*12*t_w*12/2)

Use 1-#11@6"c/c EF **Asv provided = 3.12 in^2/ft each face** **ρ_v (prov)= 0.01083**

3.0e) Perform Strain-Compatible Section Analysis - For Axial Force (Tension) **Ft =** 0 kips

ϕ : Strength reduction factor (= 0.9 for tension, ACI 349 9.3.2.2), ϕ = 0.9
c : Distance from compression face to neutral axis (ft)
l_w : Length of wall (ft)
ε_{s_max} = [(l_w -c) / c] * ε_c
X_1 = l_w - c - X_2 (ft) (length of wall with tension steel reinforcing steel strain > ε_y)
X_2 = X_3 = (ε_y / ε_c) * c (ft) (length of wall with tension / compression steel reinforcing steel strain < ε_y)
X_4 = c - X_3 (ft) (length of wall with compression steel reinforcing steel strain > ε_y)
T_1 = X_1 * As * fy (kips)
T_2 = C_2 = 0.5 * X_2 * As * fy (kips)
C_1 = X_4 * As * fy (kips)
C = 0.85 * 0.8 * c * t_w * f'_c * 144 (kips)
Balanced condition : Tension = Compression, T_1+T_2-C_2-C_1-C+Ft/ϕ = 0.
M_u : Total moment capacity = ϕ{T_1(X_2+X_1/2) + T_2(X_2*2/3) + C(c-0.8*c/2) + F_t(l_w/2-c)/ϕ + C_2(X_3*2/3) + C_1(X_3+X_4/2)}, (kip-ft)

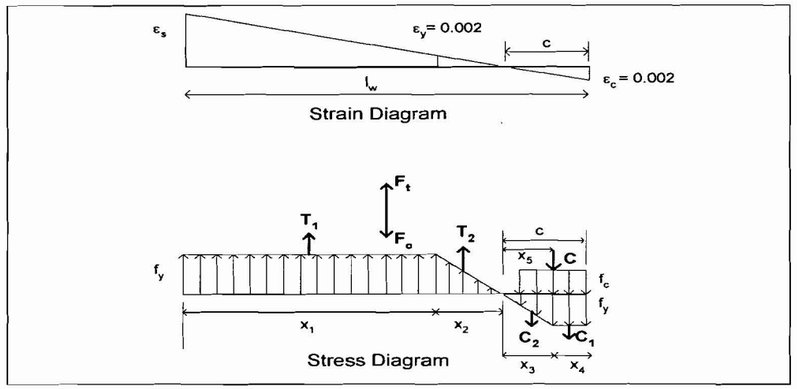

Using Goal Seek to find "c" and "Mu"

c (ft)	l_w - c (ft)	ε_{s_max}	X_1 (ft)	X_2=X_3 (ft)	X_4 (ft)	T_1 (k)	T_2=C_2 (k)	C_1 (k)	C (k)	T_1+T_2-C_2-C_1-C+F_t/ϕ	M_u (k-ft)
3.53	21.97	0.0125	18.45	3.53	0.00	6906	660	0	6906	0.000	95198

Verified that equations were correct

c (ft)	l_w - c (ft)	ε_{s_max}	X_1 (ft)	X_2=X_3 (ft)	X_4 (ft)	T_1 (k)	T_2=C_2 (k)	C_1 (k)	C (k)	T_1+T_2-C_2-C_1-C+F_t/ϕ	M_u (k-ft)
3	22.5	0.0150	19.50	3.00	0.00	7300.8	561.6	0	5875	1426	95316
5	20.5	0.0082	15.50	5.00	0.00	5803.2	936	0	9792	-3989	98646

4	21.5	0.0108	17.50	4.00	0.00	6552	748.8	0	7834	-1282	95699

Perform Strain-Compatible Section Analysis - For Axial Force (Comp) **Fc =** 4875 kips

ϕ : Strength reduction factor (= 0.7 to 0.9 for comp, ACI 349 9.3.2.2), ϕ = 0.7672
If Fc<=0, ϕ=0.9; if Fc>0, ϕ=0.9-0.2*Fc/(0.1*Acv*144*f'_c/1000)

Using Goal Seek to find "c" and "Mu"

c (ft)	l_w - c (ft)	ε_{s_max}	X_1 (ft)	X_2=X_3 (ft)	X_4 (ft)	T_1 (k)	T_2=C_2 (k)	C_1 (k)	C (k)	T_1+T_2-C_2-C_1-C+F_c/ϕ	M_u (k-ft)
5.87	19.63	0.0067	13.75	5.87	0.00	5149	1100	0	11503	0.000	121601

Verified that equations were correct

c (ft)	l_w - c (ft)	ε_{s_max}	X_1 (ft)	X_2=X_3 (ft)	X_4 (ft)	T_1 (k)	T_2=C_2 (k)	C_1 (k)	C (k)	T_1+T_2-C_2-C_1-C+F_c/ϕ	M_u (k-ft)
4	21.5	0.0108	17.50	4.00	0.00	6552	748.8	0	7834	5072	124238
5	20.5	0.0082	15.50	5.00	0.00	5803.2	936	0	9792	2365	121876
6	19.5	0.0065	13.50	6.00	0.00	5054.4	1123.2	0	11750	-342	121699

3.0f) Check Demand / Capacity Ratio for In-Plane Moment:

Vertical Reinforcing Ratio Provided by Design : ρ_v (prov)= 0.0108 1-#11@6"c/c EF ρ_v = (2*Asv)/(12*t_w*12)
D/C = (in-plane moment Mz) / (Min of Mu-ten, Mu-comp) D/C = 0.36 **Section Adequate**
Vertical Reinforcing Ratio Required for In-Plane Moment: $\rho_{vl\ req}$ = 0.0039 $\rho_{v\ req}$ = ρ_v*(D/C)

3.0g) Consider Out-of-Plane Moment:

Vertical Reinf Ratio Required for Out-of-Plane Bending: $\rho_{vt\ req}$ = 0.00186 (per face) $\rho f_y bd^2(1-.59\rho f_y/f'_c)=Mu/\phi$ solve for ρ Ref. 2.2.19, Section 4-3

3.0h) Total Reinforcing required for axial force, in-plane and out of plane bending ρ_v = 0.0058 = $\rho_{vl}+\rho_{vt} > 2\rho_{vt}$

D/C = ρ_v(reqd) / ρ_v (prov) D/C = 0.54 **Section Adequate** = ρ_{vl}(req'd) / ρ_v(prov)

4.0 Boundary Elements:

h_w / l_w = 2.27 Concrete Strain limited to .002 No Need To Check for Boundary Elements

5.0 Out-of-Plane Shear:

Nominal Shear Strength Provided by The Concrete Vc=2*(f'c)$^{1/2}$*b*d Vc = 73.0 kips/ft width of wall

Check Demand / Capacity Ratio: D/C = 0.32 No Shear Reinforcement Required
D/C = (out-of-plane shear Vz) / (0.85*Vc)

6.0 Tabulate Reinforcement Requirements And D/C Ratios:

Use 4 ft thick wall with 1-#11@12"c/c EF Horizontal Reinforcement
1-#11@6"c/c EF Vertical Reinforcement.

For Shear on Gross Section:	**D/C =**	**0.41**
For In-Plane Shear:	**D/C =**	**0.50**
For Out-of-Plane Shear:	**D/C =**	**0.32**
Bending + axial Loads	**D/C =**	**0.54**

Boundary Elements **D/C=** **BOUNDARY ELEMENTS NOT REQUIRED**

6.4.5

Transverse Walls (48" thick) Design Loads, Column Line 3

Section cut design forces and moments, which follow a global axis system, for the transverse wall on column line 3 include in plane forces and moments: such as axial forces (tension/compression), in plane moment, and in plane shear. The section cut values are integrated along the section cut length, thus for SCUT7a and SCUT7b the length is equal to 25.5'. Out of plane values such as out of plane bending and out of plane shear are attained by shell element forces and moments from SAP2000, which follow a local axis system. The out of plane bending moments provided are M22 and M12, which is a twisting moment that is combined with M22. The out of plane shear forces from the shell elements include V13 and V23.

Follow notation below to convert from SAP2000 labeling (i.e. F1, M22...) to appropriate design forces and moments.

SCUT7a & SCUT7b
F1 = In Plane Shear
F3 = Axial Force, Compression (+) / Tension (-)
M2 = In Plane Moment

Accidental torsion factor= 15% (See assumption 3.1.4)

Section Cut	DL+LL						Seismic (SRSS)					
	F1	F2	F3	M1	M2	M3	F1	F2	F3	M1	M2	M3
	Kip	Kip	Kip	Kip-ft	Kip-ft	Kip-ft	Kip	Kip	Kip	Kip-ft	Kip-ft	Kip-ft
SCUT7a	-68	-	1153	-	136	-	1838	-	2852	-	41068	-
SCUT7b	73	-	1160	-	-8	-	1837	-	2853	-	41103	-

Loads with accidental torsion factor

Section Cut	DL+LL						Seismic (SRSS)					
	F1	F2	F3	M1	M2	M3	F1	F2	F3	M1	M2	M3
	Kip	Kip	Kip	Kip-ft	Kip-ft	Kip-ft	Kip	Kip	Kip	Kip-ft	Kip-ft	Kip-ft
SCUT7a	-78	-	1325	-	156	-	2113	-	3280	-	47228	-
SCUT7b	84	-	1334	-	-9	-	2113	-	3281	-	47268	-

Maximum Load Combination

Section Cut	DL+LL+Seismic (SRSS)						DL+LL+Seismic (SRSS)					
	F1	F2	F3	M1	M2	M3	F1	F2	F3	M1	M2	M3
	Kip	Kip	Kip	Kip-ft	Kip-ft	Kip-ft	Kip	Kip	Kip	Kip-ft	Kip-ft	Kip-ft
SCUT7a	2035	-	4606	-	47384	-	-2192	-	-1955	-	-47072	-
SCUT7b	2197	-	4615	-	47259	-	-2028	-	-1947	-	-47277	-

Shell Element Forces and Moments
M22 = Out of Plane Moment
M12 = Twisting Moment
V13 = Out of Plane Shear
V23 = Out of Plane Shear

MAX MIN	Element Forces - Area Shells DL+LL					MAX	Element Forces - Area Shells SRSS				
	M11	M22	M12	V13	V23		M11	M22	M12	V13	V23
	Kip-ft/ft	Kip-ft/ft	Kip-ft/ft	Kip/ft	Kip/ft		Kip-ft/ft	Kip-ft/ft	Kip-ft/ft	Kip/ft	Kip/ft
MAX	11	29	11	2	0	MAX	162	91	29	16	9
MIN	-7	-7	-11	-2	-2						

Loads with accidental torsion factor

MAX MIN	Element Forces - Area Shells DL+LL					MAX	Element Forces - Area Shells SRSS				
	M11	M22	M12	V13	V23		M11	M22	M12	V13	V23
	Kip-ft/ft	Kip-ft/ft	Kip-ft/ft	Kip/ft	Kip/ft		Kip-ft/ft	Kip-ft/ft	Kip-ft/ft	Kip/ft	Kip/ft
MAX	13	34	12	2	0	MAX	187	105	33	18	10
MIN	-8	-8	-12	-2	-2						

Maximum Load Combination

MAX MIN	DL+LL+Seismic(SRSS)					MAX MIN	DL+LL+Seismic(SRSS)				
	M11	M22	M12	V13	V23		M11	M22	M12	V13	V23
	Kip-ft/ft	Kip-ft/ft	Kip-ft/ft	Kip/ft	Kip/ft		Kip-ft/ft	Kip-ft/ft	Kip-ft/ft	Kip/ft	Kip/ft
MAX	200	138	45	20	10	MAX	-174	-71	-21	-16	-10
MIN	179	97	21	16	8	MIN	-195	-113	-45	-20	-12

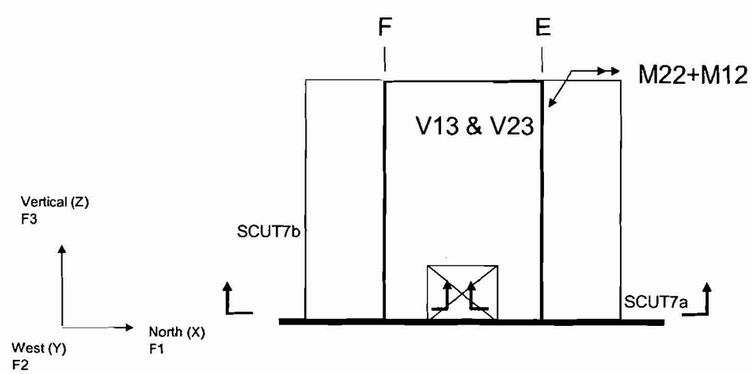

TRANSVERSE WALL AT COL. 3 ---- ELEVATION

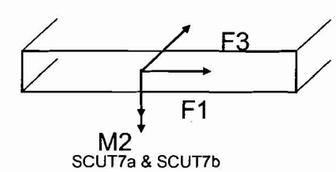

6.4.5.1 TRANSVERSE WALL REINFORCEMENT, COLUMN LINE 3

Transverse Wall COL 3-SCUT7a---D+L-SRSS

Design Loads				Shear Wall Section Properties				Concrete & Rebar Properties			
Axial Force (-Tension)	Ft =	-1955	kips	Height of Wall (segment)	h_w =	58	ft	Concrete Design Strength	f'c =	5000	psi
Axial Force (+Comp)	Fc =	0	kips	Ht of Wall Between Floors	H =	58	ft	Concrete Strain	ε_c =	0.002	
In plane shear	Vu =	2192	kips	Length of Wall (Segment)	l_w =	25.5	ft	Rebar Yield Strength	fy =	60	ksi
In plane Moment	Mz =	47072	ft-kips	Thickness of Wall	t_w =	4	ft	Rebar Yield Strain	ε_y =	0.002	
				Shear Area of Wall (Segment)	Acv = l_w*t_w =	102	ft^2	Min Steel Required	ρ_{min} =	0.0025	
								Concrete Cover		5	in
Out of plane shear	Vz =	20	kips/ft					(Use 5" = 2" clear cover + diameter of the outer layer rebar + 1/2 diameter of the inner layer rebar)			
Out of plane Moment	My =	158	ft-kips/ft (M22+M12)								

Note: For ACI 349, see Ref. 2.2.14, for sections 1.0 to 6.0 of this design subset.

1.0 Check Shear on gross section - ACI 349: 21.6.5.6

Nominal Shear Capacity = 8*Acv*(f'c) $^{1/2}$ — Vn (kips) = 8309

Factored Shear Load = Vu / ϕ — Vu/ϕ (kips)= 3653.3
(ϕ = .6 per ACI 349 - 9.3.4)

Demand Capacity Ratio
Check Code 21.6.5.6 Demand/Capacity Ratio — D/C = (Vu/ϕ)/Vn — D/C = 0.44 **SHEAR WALL THICKNESS OK**

2.0 Horizontal Reinforcing Requirements

2.0a) ACI 349 - 21.6.5.3 Requirements

Determine α_c : h_w / l_w = 2.27 — α_c = 2 — α_c=3 for h_w/l_w<1.5, α_c varies linearly from 3 for h_w/l_w=1.5 to 2 for h_w/l_w=2.

Determine Concrete Shear Capacity Vc=Acv*α_c*(f'c) $^{1/2}$ — Vc = 2077.2 kips

Determine Shear Carried by Steel Vs=Vu/ϕ -Vc — Vs = 1576.1 kips

Determine Required Shear Reinforcing ρ=Vs/(fy*Acv) — ρ = 0.0018

21.6.5.3 Shear Reinforcing Requirements — **ρ_n = 0.0025** MINIMUM STEEL GOVERNS

2.0b) ACI 349 - 11.10.6 Equation 11-31 Requirements

Determine Concrete Shear Capacity — Vc = 2350.9 kips — Vc=3.3*(f'$_c$)$^{0.5}$*(0.8*t_w*l_w)+F_t*0.8*l_w/(4*l_w)

Determine Shear Carried by Steel Vs=Vu/ϕ -Vc — Vs = 1302.4 kips

Determine Required Shear Reinforcing — ρ = 0.0018 — ρ=Vs/(0.8*l_w*t_w*144*fy)

11.10.6 - Equation 11-31 Shear Reinforcing Requirements — **ρ_n = 0.0025** MINIMUM STEEL GOVERNS

2.0c) ACI 349 - 11.10.6 Equation 11-32 Requirements

Check Bounding Case Mu/Vu - l_w/2 = 8.72 **Equation 11-32 APPLICABLE**

Determine Concrete Shear Capacity — Vc= 2619.90508 — Vc=[0.6*f$_c^{0.5}$+l_w*(1.25*f$_c^{0.5}$+0.2*Ft*1000/(l_w*t_w*144))/(Mu/Vu-l_w/2)]*t_w*0.8*l_w*144/1000

Determine Shear Carried by Steel — Vs = 1033.42825 — Vs=Vu/ϕ -Vc

Determine Required Shear Reinforcing Requirements — ρ = 0.0015 — ρ=Vs/(0.8*l_w*t_w*144*fy)

11.10.6 - Equation 11-32 Shear Reinforcing Requirements — **ρ_n = 0.0025 MINIMUM STEEL GOVERNS**

2.0d) Horizontal Shear Reinforcing Requirements (max of 2a, 2b, 2c) — **ρ_n = 0.0025**

2.0e) Select Horizontal Shear Reinforcing **Asn required per ft on each face = 0.72 in^2/ft each face** (ρ_n*12*t_w*12/2)

Use 1-#11@12"c/c EF Asn provided = 1.56 in^2/ft each face ρ_n (prov)=0.00542

2.0f) Check Demand / Capacity Ratio for In-Plane Shear:

D/C = 0.53 — D/C=(Vu/ϕ)/[Vc+(Asn*2*fy*l_w*t_w*144/(12*t_w*12))]

3.0 Vertical Reinforcing Requirements

3.0a) ACI 349 21.6.5.5 and 11.10.9.4 - Minimum vertical reinforcing ratio : hw/lw = 2.27

If h_w/l_w>2.0, use: $\rho_{v\,min}$ =0.0025+0.5(2.5-h_w/l_w)(ρ_n-0.0025)<=ρ_n

ρ_v (min) =0.0025 If h_w/l_w<=2.0, use: ρ_v>=ρ_n

3.0b) Check Shear Friction Requirements

In plane shear per foot of wall:	85.96 kips/ft	(Vu/l_w)
Transverse shear per ft of wall:	20.00 kips/ft	(Vz)
Resultant Shear	88.26 kips/ft	$[(\text{in-plane shear})^2+(\text{transverse shear})^2]^{0.5}$

Calculate limiting shear friction strength at joint per ACI 349-11.7.5:

Vn<.2f'cAv for f'c = 5000 psi Vn=1000Av
Vn<800Av — The limiting value of 800Av controls

Vn (MAX) = 460.8 kips/ft **Vn(MAX>Resultant shear .....OK**

Calculate shear friction reinforcing requirements per ACI 349 - 11.7.4.1:

Vn = Avf*fy*μ — μ = 1.0 for concrete placed against hardened concrete intentionally roughened to a full amplitude of 1/4 inch (ACI 349-11.7.9)

Avf = Vu/2*ϕ*μ*fy (steel required per face)
Avf = 0.87 in^2/ft (steel required on each face for shear friction))

Calculate steel required for net Tension force

At = T/2*ϕ*fy*lw
At = 0.75 in^2/ft (steel required on each face for direct tension)

Steel Requirements for Shear Friction Avf + At

Av = 1.62 in^2/ft (steel required on each face for shear friction + direct tension)

ρv(req'd) = 0.0056 $(\rho_{v\ req'd}=(2*Av)/(12*t_w*12)$

3.0c) Vertical Reinforcing Requirements (max of 3a,3b) ρ_v **= 0.0056**

3.0d) Select Vertical Reinforcing **Asv required per ft on each face =** **1.62** **in²/ft each face** $(\rho_{v\ min}*12*t_w*12/2)$

Use 1-#11@6"c/c EF **Asv provided = 3.12** **in²/ft each face** ρ_v **(prov)= 0.01083**

3.0e) Perform Strain-Compatible Section Analysis - For Axial Force (Tension) **Ft =** -1955 kips

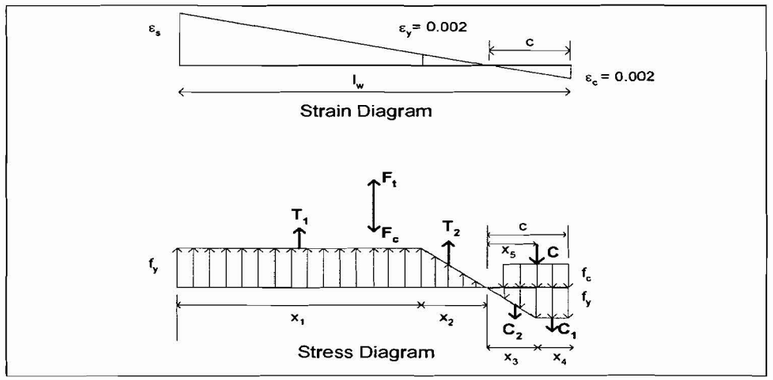

ϕ : Strength reduction factor (= 0.9 for tension, ACI 349 9.3.2.2), ϕ = 0.9
c : Distance from compression face to neutral axis (ft)
l_w : Length of wall (ft)
$\varepsilon_{s\_max} = [(l_w - c) / c] * \varepsilon_c$
$X_1 = l_w - c - X_2$ (ft) (length of wall with tension steel reinforcing steel strain > ε_y)
$X_2 = X_3 = (\varepsilon_y / \varepsilon_c) * c$ (ft) (length of wall with tension / compression steel reinforcing steel strain < ε_y)
$X_4 = c - X_3$ (ft) (length of wall with compression steel reinforcing steel strain > ε_y)
$T_1 = X_1 * As * fy$ (kips)
$T_2 = C_2 = 0.5 * X_2 * As * fy$ (kips)
$C_1 = X_4 * As * fy$ (kips)
$C = 0.85 * 0.8 * c * t_w * f'_c * 144$ (kips)
Balanced condition : Tension = Compression, $T_1+T_2-C_2-C_1-C+Ft/\phi = 0$.
M_u : Total moment capacity = $\phi\{T_1(X_2+X_1/2) + T_2(X_2*2/3) + C(c-0.8*c/2) + F_t(l_w/2-c)/\phi + C_2(X_3*2/3) + C_1(X_3+X_4/2)\}$, (kip-ft)

Using Goal Seek to find "c" and "Mu"

c (ft)	l_w - c (ft)	ε_{s_max}	X_1 (ft)	$X_2=X_3$ (ft)	X_4 (ft)	T_1 (k)	$T_2=C_2$ (k)	C_1 (k)	C (k)	$T_1+T_2-C_2-C_1-C+F_t/\phi$	M_u (k-ft)
2.72	22.78	0.0167	20.05	2.72	0.00	7507	510	0	5335	0.000	76061

Verified that equations were correct+B84

c (ft)	l_w - c (ft)	ε_{s_max}	X_1 (ft)	$X_2=X_3$ (ft)	X_4 (ft)	T_1 (k)	$T_2=C_2$ (k)	C_1 (k)	C (k)	$T_1+T_2-C_2-C_1-C+F_t/\phi$	M_u (k-ft)
2	23.5	0.0235	21.50	2.00	0.00	8049.6	374.4	0	3917	1961	76482
4	21.5	0.0108	17.50	4.00	0.00	6552	748.8	0	7834	-3454	78593
3	22.5	0.0150	19.50	3.00	0.00	7300.8	561.6	0	5875	-747	76255

Perform Strain-Compatible Section Analysis - For Axial Force (Comp) **Fc =** 0 kips

ϕ : Strength reduction factor (= 0.7 to 0.9 for comp, ACI 349 9.3.2.2), ϕ = 0.9000
If Fc<=0, ϕ=0.9; if Fc>0, ϕ=0.9-0.2*Fc/(0.1*Acv*144*f'_c/1000)

Using Goal Seek to find "c" and "Mu"

c (ft)	l_w - c (ft)	ε_{s_max}	X_1 (ft)	X_2=X_3 (ft)	X_4 (ft)	T_1 (k)	T_2=C_2 (k)	C_1 (k)	C (k)	T_1+T_2-C_2-C_1-C+F_c/ϕ	M_u (k-ft)
3.53	21.97	0.0125	18.45	3.53	0.00	6906	660	0	6906	0.000	95198

Verified that equations were correct

c (ft)	l_w - c (ft)	ε_{s_max}	X_1 (ft)	X_2=X_3 (ft)	X_4 (ft)	T_1 (k)	T_2=C_2 (k)	C_1 (k)	C (k)	T_1+T_2-C_2-C_1-C+F_c/ϕ	M_u (k-ft)
3	22.5	0.0150	19.50	3.00	0.00	7300.8	561.6	0	5875	1426	95316
5	20.5	0.0082	15.50	5.00	0.00	5803.2	936	0	9792	-3989	98646
4	21.5	0.0108	17.50	4.00	0.00	6552	748.8	0	7834	-1282	95699

3.0f) Check Demand / Capacity Ratio for In-Plane Moment:

Vertical Reinforcing Ratio Provided by Design : ρ_v(prov)= 0.0108 1-#11@6"c/c EF ρ_v = (2*Asv)/(12*t_w*12)
D/C = (in-plane moment Mz) / (Min of Mu-ten, Mu-comp) D/C = 0.62 **Section Adequate**
Vertical Reinforcing Ratio Required for In-Plane Moment: $\rho_{vl\ req}$ = 0.0067 $\rho_{v\ req}$ = ρ_v*(D/C)

3.0g) Consider Out-of-Plane Moment:

Vertical Reinf Ratio Required for Out-of-Plane Bending: $\rho_{vt\ req}$ = 0.00160 (per face) $\rho f_y bd^2(1-.59\rho f_y/f'_c)=Mu/\phi$ solve for ρ Ref. 2.2.19, Section 4-3

3.0h) Total Reinforcing required for axial force, in-plane and out of plane bending ρ_v = 0.0083 = $\rho_{vl}+\rho_{vt} > 2\rho_{vt}$

D/C = ρ_v(reqd) / ρ_v (prov) D/C = 0.77 **Section Adequate** = ρ_{vt}req'd) / ρ_v(prov)

4.0 Boundary Elements:

h_w / l_w = 2.27 Concrete Strain limited to .002 No Need To Check for Boundary Elements

5.0 Out-of-Plane Shear:

Nominal Shear Strength Provided by The Concrete Vc=2*(f'c)$^{1/2}$*b*d Vc = 73.0 kips/ft width of wall

Check Demand / Capacity Ratio: D/C = 0.32 No Shear Reinforcement Required
D/C = (out-of-plane shear Vz) / (0.85*Vc)

6.0 Tabulate Reinforcement Requirements And D/C Ratios:

Use 4 ft thick wall with 1-#11@12"c/c EF Horizontal Reinforcement
1-#11@6"c/c EF Vertical Reinforcement.

For Shear on Gross Section:	**D/C =**	**0.44**
For In-Plane Shear:	**D/C =**	**0.53**
For Out-of-Plane Shear:	**D/C =**	**0.32**
Bending + axial Loads	**D/C =**	**0.77**

Boundary Elements **D/C= BOUNDARY ELEMENTS NOT REQUIRED**

Transverse Wall COL 3-SCUT7a---D+L+SRSS

Design Loads			Shear Wall Section Properties			Concrete & Rebar Properties		
Axial Force (-Tension)	Ft =	0 kips	Height of Wall (segment)	h_w =	58 ft	Concrete Design Strength	f'c =	5000 psi
Axial Force (+Comp)	Fc =	4606 kips	Ht of Wall Between Floors	H =	58 ft	Concrete Strain	ε_c =	0.002
In plane shear	Vu =	2035 kips	Length of Wall (Segment)	l_w =	25.5 ft	Rebar Yield Strength	fy =	60 ksi
In plane Moment	Mz =	47384 ft-kips	Thickness of Wall	t_w =	4 ft	Rebar Yield Strain	ε_y =	0.002
			Shear Area of Wall (Segment)	Acv = l_w*t_w =	102 ft^2	Min Steel Required	ρ_{min} =	0.0025
						Concrete Cover		5 in
Out of plane shear	Vz =	20 kips/ft				(Use 5" = 2" clear cover + diameter of the outer layer rebar + 1/2 diameter of the inner layer rebar)		
Out of plane Moment	My =	183 ft-kips/ft (M22+M12)						

Note: For ACI 349, see Ref. 2.2.14, for sections 1.0 to 6.0 of this design subset.

1.0 Check Shear on gross section - ACI 349: 21.6.5.6

Nominal Shear Capacity = 8*Acv*(f'c) $^{1/2}$ Vn (kips) = 8309

Factored Shear Load = Vu / ϕ Vu/ϕ (kips)= 3391.7
(ϕ = .6 per ACI 349 - 9.3.4)

Demand Capacity Ratio
Check Code 21.6.5.6 Demand/Capacity Ratio D/C = (Vu/ϕ)/Vn D/C = 0.41 **SHEAR WALL THICKNESS OK**

2.0 Horizontal Reinforcing Requirements

2.0a) ACI 349 - 21.6.5.3 Requirements

Determine α_c : h_w / l_w = 2.27 α_c = 2 α_c=3 for h_w/l_w<1.5, α_c varies linearly from 3 for h_w/l_w=1.5 to 2 for h_w/l_w=2.

Determine Concrete Shear Capacity Vc=Acv*α_c*(f'c) $^{1/2}$ Vc = 2077.2 kips

Determine Shear Carried by Steel Vs=Vu/ϕ -Vc Vs = 1314.5 kips

Determine Required Shear Reinforcing ρ=Vs/(fy*Acv) ρ = 0.0015

21.6.5.3 Shear Reinforcing Requirements **ρ_n = 0.0025** MINIMUM STEEL GOVERNS

2.0b) ACI 349 - 11.10.6 Equation 11-31 Requirements

Determine Concrete Shear Capacity Vc = 2741.9 kips Vc=3.3*(f'$_c$)$^{0.5}$*(0.8*t_w*l_w)+F_t*0.8*l_w/(4*l_w)

Determine Shear Carried by Steel Vs=Vu/ϕ -Vc Vs = 649.8 kips

Determine Required Shear Reinforcing ρ = 0.0009 ρ=Vs/(0.8*l_w*t_w*144*fy)

11.10.6 - Equation 11-31 Shear Reinforcing Requirements **ρ_n = 0.0025** MINIMUM STEEL GOVERNS

2.0c) ACI 349 - 11.10.6 Equation 11-32 Requirements

Check Bounding Case Mu/Vu - l_w/2 = 10.53 **Equation 11-32 APPLICABLE**

Determine Concrete Shear Capacity Vc= 3012.57231 Vc=[0.6*f$_c$$^{0.5}$+$l_w$*(1.25*f$_c$$^{0.5}$+0.2*Ft*1000/($l_w$*$t_w$*144))/(Mu/Vu-$l_w$/2)]*$t_w$*0.8*$l_w$*144/1000

Determine Shear Carried by Steel Vs = 379.094352 Vs=Vu/ϕ -Vc

Determine Required Shear Reinforcing Requirements ρ = 0.0005 ρ=Vs/(0.8*l_w*t_w*144*fy)

11.10.6 - Equation 11-32 Shear Reinforcing Requirements **ρ_n = 0.0025 MINIMUM STEEL GOVERNS**

2.0d) Horizontal Shear Reinforcing Requirements (max of 2a, 2b, 2c) **ρ_n = 0.0025**

2.0e) Select Horizontal Shear Reinforcing **Asn required per ft on each face = 0.72 in^2/ft each face** (ρ_n*12*t_w*12/2)

Use 1-#11@12"c/c EF **Asn provided = 1.56 in^2/ft each face** **ρ_n (prov)=0.00542**

2.0f) Check Demand / Capacity Ratio for In-Plane Shear:

D/C = 0.50 D/C=(Vu/ϕ)/[Vc+(Asn*2*fy*l_w*t_w*144/(12*t_w*12))]

3.0 Vertical Reinforcing Requirements

3.0a) ACI 349 21.6.5.5 and 11.10.9.4 - Minimum vertical reinforcing ratio : hw/lw = 2.27

If h_w/l_w>2.0, use: $\rho_{v\,min}$ =0.0025+0.5(2.5-h_w/l_w)(ρ_n-0.0025)<=ρ_n

ρ_v (min) =0.0025 If h_w/l_w<=2.0, use: ρ_v>=ρ_n

3.0b) Check Shear Friction Requirements

In plane shear per foot of wall: 79.80 kips/ft (Vu/l_w)

Transverse shear per ft of wall: 20.00 kips/ft (Vz)

Resultant Shear 82.27 kips/ft $[(\text{in-plane shear})^2+(\text{transverse shear})^2]^{0.5}$

Calculate limiting shear friction strength at joint per ACI 349-11.7.5:

Vn<.2f'cAv for f'c = 5000 psi Vn=1000Av
Vn<800Av The limiting value of 800Av controls

Vn (MAX) = 460.8 kips/ft **Vn(MAX>Resultant shear .....OK**

Calculate shear friction reinforcing requirements per ACI 349 - 11.7.4.1:

Vn = Avf*fy*μ μ = 1.0 for concrete placed against hardened concrete intentionally roughened to a full amplitude of 1/4 inch (ACI 349-11.7.9)

Avf = Vu/2*ϕ*μ*fy (steel required per face)
Avf = 0.81 in^2/ft (steel required on each face for shear friction))

Calculate steel required for net Tension force

At = T/2*ϕ*fy*lw
At = 0.00 in^2/ft (steel required on each face for direct tension)

Steel Requirements for Shear Friction Avf + At

Av = 0.81 in^2/ft (steel required on each face for shear friction + direct tension)

ρv(req'd) = 0.0028 $(\rho_{v\,req'd}=(2*Av)/(12*t_w*12)$

3.0c) Vertical Reinforcing Requirements (max of 3a,3b) ρ_v **= 0.0028**

3.0d) Select Vertical Reinforcing **Asv required per ft on each face =** **0.81** **in²/ft each face** $(\rho_{v\,min}*12*t_w*12/2)$

Use 1-#11@6"c/c EF **Asv provided = 3.12** **in²/ft each face** ρ_v **(prov)= 0.01083**

3.0e) Perform Strain-Compatible Section Analysis - For Axial Force (Tension) **Ft =** 0 kips

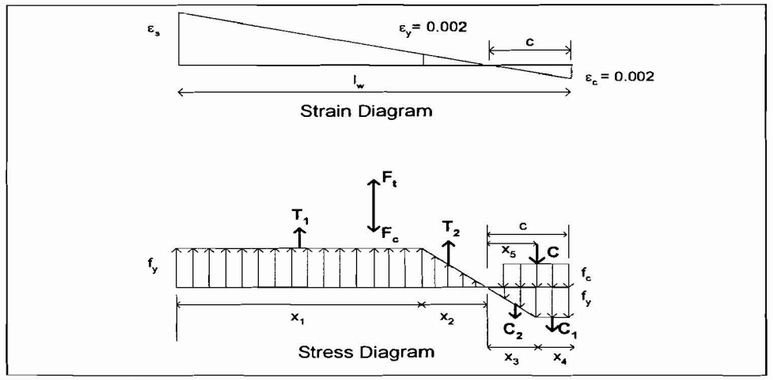

ϕ : Strength reduction factor (= 0.9 for tension, ACI 349 9.3.2.2), ϕ = 0.9
c : Distance from compression face to neutral axis (ft)
l_w : Length of wall (ft)
$\varepsilon_{s\_max} = [(l_w - c) / c] * \varepsilon_c$
$X_1 = l_w - c - X_2$ (ft) (length of wall with tension steel reinforcing steel strain > ε_y)
$X_2 = X_3 = (\varepsilon_y / \varepsilon_c) * c$ (ft) (length of wall with tension / compression steel reinforcing steel strain < ε_y)
$X_4 = c - X_3$ (ft) (length of wall with compression steel reinforcing steel strain > ε_y)
$T_1 = X_1 * As * fy$ (kips)
$T_2 = C_2 = 0.5 * X_2 * As * fy$ (kips)
$C_1 = X_4 * As * fy$ (kips)
$C = 0.85 * 0.8 * c * t_w * f'_c * 144$ (kips)
Balanced condition : Tension = Compression, $T_1+T_2-C_2-C_1-C+Ft/\phi = 0$.
M_u : Total moment capacity = $\phi\{T_1(X_2+X_1/2) + T_2(X_2*2/3) + C(c-0.8*c/2) + F_t(l_w/2-c)/\phi + C_2(X_3*2/3) + C_1(X_3+X_4/2)\}$, (kip-ft)

Using Goal Seek to find "c" and "Mu"

c (ft)	l_w - c (ft)	ε_{s_max}	X_1 (ft)	X_2=X_3 (ft)	X_4 (ft)	T_1 (k)	T_2=C_2 (k)	C_1 (k)	C (k)	$T_1+T_2-C_2-C_1-C+F_t/\phi$	M_u (k-ft)
3.53	21.97	0.0125	18.45	3.53	0.00	6906	660	0	6906	0.000	95198

Verified that equations were correct

c (ft)	l_w - c (ft)	ε_{s_max}	X_1 (ft)	X_2=X_3 (ft)	X_4 (ft)	T_1 (k)	T_2=C_2 (k)	C_1 (k)	C (k)	$T_1+T_2-C_2-C_1-C+F_t/\phi$	M_u (k-ft)
3	22.5	0.0150	19.50	3.00	0.00	7300.8	561.6	0	5875	1426	95316
5	20.5	0.0082	15.50	5.00	0.00	5803.2	936	0	9792	-3989	98646
4	21.5	0.0108	17.50	4.00	0.00	6552	748.8	0	7834	-1282	95699

Perform Strain-Compatible Section Analysis - For Axial Force (Comp) **Fc =** 4606 kips

ϕ : Strength reduction factor (= 0.7 to 0.9 for comp, ACI 349 9.3.2.2), ϕ = 0.7746
If Fc<=0, ϕ=0.9; if Fc>0, ϕ=0.9-0.2*Fc/(0.1*Acv*144*f'_c/1000)

Using Goal Seek to find "c" and "Mu"

c (ft)	l_w - c (ft)	ε_{s_max}	X_1 (ft)	X_2=X_3 (ft)	X_4 (ft)	T_1 (k)	T_2=C_2 (k)	C_1 (k)	C (k)	T_1+T_2-C_2-C_1-C+F_c/ϕ	M_u (k-ft)
5.72	19.78	0.0069	14.05	5.72	0.00	5262	1071	0	11208	0.000	120472

Verified that equations were correct

c (ft)	l_w - c (ft)	ε_{s_max}	X_1 (ft)	X_2=X_3 (ft)	X_4 (ft)	T_1 (k)	T_2=C_2 (k)	C_1 (k)	C (k)	T_1+T_2-C_2-C_1-C+F_c/ϕ	M_u (k-ft)
6	19.5	0.0065	13.50	6.00	0.00	5054.4	1123.2	0	11750	-749	120731
7	18.5	0.0053	11.50	7.00	0.00	4305.6	1310.4	0	13709	-3457	123076
5	20.5	0.0082	15.50	5.00	0.00	5803.2	936	0	9792	1958	120594

3.0f) Check Demand / Capacity Ratio for In-Plane Moment:

Vertical Reinforcing Ratio Provided by Design : ρ_v (prov)= 0.0108 1-#11@6"c/c EF ρ_v = (2*Asv)/(12*t_w*12)
D/C = (in-plane moment Mz) / (Min of Mu-ten, Mu-comp) D/C = 0.50 **Section Adequate**
Vertical Reinforcing Ratio Required for In-Plane Moment: $\rho_{vl\ req}$ = 0.0054 $\rho_{v\ req}$ = ρ_v*(D/C)

3.0g) Consider Out-of-Plane Moment:

Vertical Reinf Ratio Required for Out-of-Plane Bending: $\rho_{vt\ req}$ = 0.00186 (per face) $\rho f_y bd^2*(1-.59\rho f_y/f'_c)=Mu/\phi$ solve for ρ Ref. 2.2.19, Section 4-3

3.0h) Total Reinforcing required for axial force, in-plane and out of plane bending ρ_v = 0.0072 = $\rho_{vl}+\rho_{vt} > 2\rho_{vt}$

D/C = ρ_v(reqd) / ρ_v (prov) D/C = 0.67 **Section Adequate** = ρ_{vt}(req'd) / ρ_v(prov)

4.0 Boundary Elements:

h_w / l_w = 2.27 Concrete Strain limited to .002 No Need To Check for Boundary Elements

5.0 Out-of-Plane Shear:

Nominal Shear Strength Provided by The Concrete Vc=2*(f'c)$^{1/2}$*b*d Vc = 73.0 kips/ft width of wall

Check Demand / Capacity Ratio: D/C = 0.32 No Shear Reinforcement Required
D/C = (out-of-plane shear Vz) / (0.85*Vc)

6.0 Tabulate Reinforcement Requirements And D/C Ratios:

Use 4 ft thick wall with 1-#11@12"c/c EF Horizontal Reinforcement
1-#11@6"c/c EF Vertical Reinforcement.

For Shear on Gross Section: D/C = 0.41
For In-Plane Shear: D/C = 0.50
For Out-of-Plane Shear: D/C = 0.32
Bending + axial Loads D/C = 0.67

Boundary Elements D/C= BOUNDARY ELEMENTS NOT REQUIRED

Transverse Wall COL 3-SCUT7b---D+L-SRSS

Design Loads			Shear Wall Section Properties			Concrete & Rebar Properties		
Axial Force (-Tension)	Ft =	-1947 kips	Height of Wall (segment)	h_w =	58 ft	Concrete Design Strength	f'c =	5000 psi
Axial Force (+Comp)	Fc =	0 kips	Ht of Wall Between Floors	H =	58 ft	Concrete Strain	ε_c =	0.002
In plane shear	Vu =	2028 kips	Length of Wall (Segment)	l_w =	25.5 ft	Rebar Yield Strength	fy =	60 ksi
In plane Moment	Mz =	47277 ft-kips	Thickness of Wall	t_w =	4 ft	Rebar Yield Strain	ε_y =	0.002
			Shear Area of Wall (Segment)	Acv = l_w*t_w =	102 ft^2	Min Steel Required	ρ_{min} =	0.0025
						Concrete Cover		5 in
Out of plane shear	Vz =	20 kips/ft				(Use 5" = 2" clear cover + diameter of the outer layer rebar + 1/2 diameter of the inner layer rebar)		
Out of plane Moment	My =	158 ft-kips/ft (M22+M12)						

Note: For ACI 349, see Ref. 2.2.14, for sections 1.0 to 6.0 of this design subset.

1.0 Check Shear on gross section - ACI 349: 21.6.5.6

Nominal Shear Capacity = 8*Acv*(f'c) $^{1/2}$ — Vn (kips) = 8309

Factored Shear Load = Vu / ϕ — Vu/ϕ (kips)= 3380.0
(ϕ = .6 per ACI 349 - 9.3.4)

Demand Capacity Ratio
Check Code 21.6.5.6 Demand/Capacity Ratio — D/C = (Vu/ϕ)/Vn — D/C = 0.41 **SHEAR WALL THICKNESS OK**

2.0 Horizontal Reinforcing Requirements

2.0a) ACI 349 - 21.6.5.3 Requirements

Determine α_c : h_w / l_w = 2.27 — α_c = 2 — α_c=3 for h_w/l_w<1.5, α_c varies linearly from 3 for h_w/l_w=1.5 to 2 for h_w/l_w=2.

Determine Concrete Shear Capacity Vc=Acv*α_c*(f'c) $^{1/2}$ — Vc = 2077.2 kips

Determine Shear Carried by Steel Vs=Vu/ϕ -Vc — Vs = 1302.8 kips

Determine Required Shear Reinforcing ρ=Vs/(fy*Acv) — ρ = 0.0015

21.6.5.3 Shear Reinforcing Requirements — **ρ_n = 0.0025** MINIMUM STEEL GOVERNS

2.0b) ACI 349 - 11.10.6 Equation 11-31 Requirements

Determine Concrete Shear Capacity — Vc = 2352.5 kips — Vc=3.3*(f'$_c$)$^{0.5}$*(0.8*t_w*l_w)+F_l*0.8*l_w/(4*l_w)

Determine Shear Carried by Steel Vs=Vu/ϕ -Vc — Vs = 1027.5 kips

Determine Required Shear Reinforcing — ρ = 0.0015 — ρ=Vs/(0.8*l_w*t_w*144*fy)

11.10.6 - Equation 11-31 Shear Reinforcing Requirements — **ρ_n = 0.0025** MINIMUM STEEL GOVERNS

2.0c) ACI 349 - 11.10.6 Equation 11-32 Requirements

Check Bounding Case Mu/Vu - l_w/2 = 10.56 **Equation 11-32 APPLICABLE**

Determine Concrete Shear Capacity — Vc= 2253.90234 — Vc=[0.6*f'$_c$$^{0.5}$+$l_w$*(1.25*f'$_c$$^{0.5}$+0.2*Ft*1000/($l_w$*$t_w$*144))/(Mu/Vu-$l_w$/2)]*$t_w$*0.8*$l_w$*144/1000

Determine Shear Carried by Steel — Vs = 1126.09766 — Vs=Vu/ϕ -Vc

Determine Required Shear Reinforcing Requirements — ρ = 0.0016 — ρ=Vs/(0.8*l_w*t_w*144*fy)

11.10.6 - Equation 11-32 Shear Reinforcing Requirements — **ρ_n = 0.0025 MINIMUM STEEL GOVERNS**

2.0d) Horizontal Shear Reinforcing Requirements (max of 2a, 2b, 2c) — **ρ_n = 0.0025**

2.0e) Select Horizontal Shear Reinforcing **Asn required per ft on each face = 0.72 in^2/ft each face** (ρ_n*12*t_w*12/2)

Use 1-#11@12"c/c EF Asn provided = 1.56 in^2/ft each face **ρ_n (prov)=0.00542**

2.0f) Check Demand / Capacity Ratio for In-Plane Shear:

D/C = 0.49 — D/C=(Vu/ϕ)/[Vc+(Asn*2*fy*l_w*t_w*144/(12*t_w*12))]

3.0 Vertical Reinforcing Requirements

3.0a) ACI 349 21.6.5.5 and 11.10.9.4 - Minimum vertical reinforcing ratio : hw/lw = 2.27

ρ_v (min) =0.0025

If h_w/l_w>2.0, use: $\rho_{v\ min}$ =0.0025+0.5(2.5-h_w/l_w)(ρ_n-0.0025)<=ρ_n
If h_w/l_w<=2.0, use: ρ_v>=ρ_n

3.0b) Check Shear Friction Requirements

In plane shear per foot of wall:	79.53 kips/ft	(Vu/l_w)
Transverse shear per ft of wall:	20.00 kips/ft	(Vz)
Resultant Shear	82.01 kips/ft	$[(\text{in-plane shear})^2+(\text{transverse shear})^2]^{0.5}$

Calculate limiting shear friction strength at joint per ACI 349-11.7.5:

Vn<.2f'cAv for f'c = 5000 psi Vn=1000Av
Vn<800Av The limiting value of 800Av controls

Vn (MAX) = 460.8 kips/ft Vn(MAX>Resultant shear .....OK

Calculate shear friction reinforcing requirements per ACI 349 - 11.7.4.1:

Vn = Avf*fy*μ μ = 1.0 for concrete placed against hardened concrete intentionally roughened to a full amplitude of 1/4 inch (ACI 349-11.7.9)

Avf = Vu/2*ϕ*μ*fy (steel required per face)
Avf = 0.80 in^2/ft (steel required on each face for shear friction))

Calculate steel required for net Tension force

At = T/2*ϕ*fy*lw
At = 0.75 in^2/ft (steel required on each face for direct tension)

Steel Requirements for Shear Friction Avf + At

Av = 1.55 in^2/ft (steel required on each face for shear friction + direct tension)

ρv(req'd) = 0.0054 ($\rho_{v\ req'd}$=(2*Av)/(12*t_w*12)

3.0c) Vertical Reinforcing Requirements (max of 3a,3b) **ρ_v = 0.0054**

3.0d) Select Vertical Reinforcing **Asv required per ft on each face = 1.55 in^2/ft each face** ($\rho_{v\ min}$*12*t_w*12/2)

Use 1-#11@6"c/c EF **Asv provided = 3.12 in^2/ft each face** **ρ_v (prov)= 0.01083**

3.0e) Perform Strain-Compatible Section Analysis - For Axial Force (Tension) **Ft =** -1947 kips

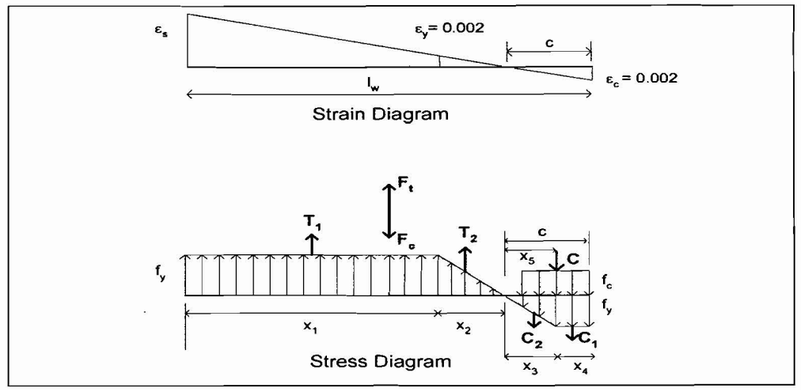

ϕ : Strength reduction factor (= 0.9 for tension, ACI 349 9.3.2.2), ϕ = 0.9
c : Distance from compression face to neutral axis (ft)
l_w : Length of wall (ft)
ε_{s_max} = [(l_w-c) / c] * ε_c
X_1 = l_w - c - X_2 (ft) (length of wall with tension steel reinforcing steel strain > ε_y)
X_2 = X_3 = (ε_y / ε_c) * c (ft) (length of wall with tension / compression steel reinforcing steel strain < ε_y)
X_4 = c - X_3 (ft) (length of wall with compression steel reinforcing steel strain > ε_y)
T_1 = X_1 * As * fy (kips)
T_2 = C_2 = 0.5 * X_2 * As * fy (kips)
C_1 = X_4 * As * fy (kips)
C = 0.85 * 0.8 * c * t_w * f'$_c$ * 144 (kips)
Balanced condition : Tension = Compression, T_1+T_2-C_2-C_1-C+Ft/ϕ = 0.
M_u : Total moment capacity = ϕ{T_1(X_2+X_1/2) + T_2(X_2*2/3) + C(c-0.8*c/2) + F_t(l_w/2-c)/ϕ + C_2(X_3*2/3) + C_1(X_3+X_4/2)}, (kip-ft)

Using Goal Seek to find "c" and "Mu"

c (ft)	l_w - c (ft)	ε_{s_max}	X_1 (ft)	X_2=X_3 (ft)	X_4 (ft)	T_1 (k)	T_2=C_2 (k)	C_1 (k)	C (k)	T_1+T_2-C_2-C_1-C+F_t/ϕ	M_u (k-ft)
2.73	22.77	0.0167	20.05	2.73	0.00	7505	511	0	5342	0.000	76143

Verified that equations were correct

c (ft)	l_w - c (ft)	ε_{s_max}	X_1 (ft)	X_2=X_3 (ft)	X_4 (ft)	T_1 (k)	T_2=C_2 (k)	C_1 (k)	C (k)	T_1+T_2-C_2-C_1-C+F_t/ϕ	M_u (k-ft)
2	23.5	0.0235	21.50	2.00	0.00	8049.6	374.4	0	3917	1969	76568
4	21.5	0.0108	17.50	4.00	0.00	6552	748.8	0	7834	-3445	78663

3	22.5	0.0150	19.50	3.00	0.00	7300.8	561.6	0	5875	-738	76333

Perform Strain-Compatible Section Analysis - For Axial Force (Comp) **Fc =** 0 kips

ϕ : Strength reduction factor (= 0.7 to 0.9 for comp, ACI 349 9.3.2.2), ϕ= 0.9000
If Fc<=0, ϕ=0.9; if Fc>0, ϕ=0.9-0.2*Fc/(0.1*Acv*144*f'$_c$/1000)

Using Goal Seek to find "c" and "Mu"

c (ft)	l_w - c (ft)	ε_{s_max}	X_1 (ft)	X_2=X_3 (ft)	X_4 (ft)	T_1 (k)	T_2=C_2 (k)	C_1 (k)	C (k)	T_1+T_2-C_2-C_1-C+F_c/ϕ	M_u (k-ft)
3.53	21.97	0.0125	18.45	3.53	0.00	6906	660	0	6906	0.000	95198

Verified that equations were correct

c (ft)	l_w - c (ft)	ε_{s_max}	X_1 (ft)	X_2=X_3 (ft)	X_4 (ft)	T_1 (k)	T_2=C_2 (k)	C_1 (k)	C (k)	T_1+T_2-C_2-C_1-C+F_c/ϕ	M_u (k-ft)
3	22.5	0.0150	19.50	3.00	0.00	7300.8	561.6	0	5875	1426	95316
5	20.5	0.0082	15.50	5.00	0.00	5803.2	936	0	9792	-3989	98646
4	21.5	0.0108	17.50	4.00	0.00	6552	748.8	0	7834	-1282	95699

3.0f) Check Demand / Capacity Ratio for In-Plane Moment:

Vertical Reinforcing Ratio Provided by Design : ρ_v (prov)= 0.0108 1-#11@6"c/c EF ρ_v = (2*Asv)/(12*t_w*12)
D/C = (in-plane moment Mz) / (Min of Mu-ten, Mu-comp) D/C = 0.62 **Section Adequate**
Vertical Reinforcing Ratio Required for In-Plane Moment: $\rho_{vl\ req}$ = 0.0067 $\rho_{v\ req}$ = ρ_v*(D/C)

3.0g) Consider Out-of-Plane Moment:

Vertical Reinf Ratio Required for Out-of-Plane Bending: $\rho_{vt\ req}$ = 0.00160 (per face) $\rho f_y bd^2(1-.59\rho f_y/f'_c)=Mu/\phi$ solve for ρ Ref. 2.2.19, Section 4-3

3.0h) Total Reinforcing required for axial force, in-plane and out of plane bending ρ_v = 0.0083 = $\rho_{vl}+\rho_{vt} > 2\rho_{vt}$

D/C = ρ_v(reqd) / ρ_v (prov) D/C = 0.77 **Section Adequate** = ρ_{vt}(req'd) / ρ_v(prov)

4.0 Boundary Elements:

h_w / l_w = 2.27 Concrete Strain limited to .002 No Need To Check for Boundary Elements

5.0 Out-of-Plane Shear:

Nominal Shear Strength Provided by The Concrete Vc=2*(f'c)$^{1/2}$*b*d Vc = 73.0 kips/ft width of wall

Check Demand / Capacity Ratio: D/C = 0.32 No Shear Reinforcement Required
D/C = (out-of-plane shear Vz) / (0.85*Vc)

6.0 Tabulate Reinforcement Requirements And D/C Ratios:

Use 4 ft thick wall with 1-#11@12"c/c EF Horizontal Reinforcement
1-#11@6"c/c EF Vertical Reinforcement.

For Shear on Gross Section:	**D/C =**	**0.41**
For In-Plane Shear:	**D/C =**	**0.49**
For Out-of-Plane Shear:	**D/C =**	**0.32**
Bending + axial Loads	**D/C =**	**0.77**

Boundary Elements **D/C= BOUNDARY ELEMENTS NOT REQUIRED**

Transverse Wall COL 3-SCUT7b---D+L+SRSS

Design Loads

Axial Force (-Tension)	**Ft =**	0	kips
Axial Force (+Comp)	**Fc =**	4615	kips
In plane shear	**Vu =**	2197	kips
In plane Moment	**Mz =**	47259	ft-kips
Out of plane shear	**Vz =**	20	kips/ft
Out of plane Moment	**My =**	183	ft-kips/ft (M22+M12)

Shear Wall Section Properties

Height of Wall (segment)	h_w =	58	ft
Ht of Wall Between Floors	H =	58	ft
Length of Wall (Segment)	l_w =	25.5	ft
Thickness of Wall	t_w =	4	ft
Shear Area of Wall (Segment)	Acv = l_w*t_w =	102	ft^2

Concrete & Rebar Properties

Concrete Design Strength	f'c =	5000	psi
Concrete Strain	ε_c =	0.002	
Rebar Yield Strength	fy =	60	ksi
Rebar Yield Strain	ε_y =	0.002	
Min Steel Required	ρ_{min} =	0.0025	
Concrete Cover		5	in

(Use 5" = 2" clear cover + diameter of the outer layer rebar + 1/2 diameter of the inner layer rebar)

Note: For ACI 349, see Ref. 2.2.14, for sections 1.0 to 6.0 of this design subset.

1.0 Check Shear on gross section - ACI 349: 21.6.5.6

Nominal Shear Capacity = 8*Acv*(f'c) $^{1/2}$ — Vn (kips) = 8309

Factored Shear Load = Vu / ϕ — Vu/ϕ (kips)= 3661.7

(ϕ = .6 per ACI 349 - 9.3.4)

Demand Capacity Ratio

Check Code 21.6.5.6 Demand/Capacity Ratio — D/C = (Vu/ϕ)/Vn — D/C = 0.44 **SHEAR WALL THICKNESS OK**

2.0 Horizontal Reinforcing Requirements

2.0a) ACI 349 - 21.6.5.3 Requirements

Determine α_c : h_w / l_w = 2.27 — α_c = 2 — α_c=3 for h_w/l_w<1.5, α_c varies linearly from 3 for h_w/l_w=1.5 to 2 for h_w/l_w=2.

Determine Concrete Shear Capacity Vc=Acv*α_c*(f'c) $^{1/2}$ — Vc = 2077.2 kips

Determine Shear Carried by Steel Vs=Vu/ϕ -Vc — Vs = 1584.5 kips

Determine Required Shear Reinforcing ρ=Vs/(fy*Acv) — ρ = 0.0018

21.6.5.3 Shear Reinforcing Requirements — **ρ_n = 0.0025** MINIMUM STEEL GOVERNS

2.0b) ACI 349 - 11.10.6 Equation 11-31 Requirements

Determine Concrete Shear Capacity — Vc = 2741.9 kips — Vc=3.3*(f'$_c$)$^{0.5}$*(0.8*t_w*l_w)+F_t*0.8*l_w/(4*l_w)

Determine Shear Carried by Steel Vs=Vu/ϕ -Vc — Vs = 919.8 kips

Determine Required Shear Reinforcing — ρ = 0.0013 — ρ=Vs/(0.8*l_w*t_w*144*fy)

11.10.6 - Equation 11-31 Shear Reinforcing Requirements — **ρ_n = 0.0025** MINIMUM STEEL GOVERNS

2.0c) ACI 349 - 11.10.6 Equation 11-32 Requirements

Check Bounding Case Mu/Vu - l_w/2 = 8.76 — **Equation 11-32 APPLICABLE**

Determine Concrete Shear Capacity — Vc= 3521.6043 — Vc=[0.6*f$_c$$^{0.5}$+$l_w$*(1.25*f$_c$$^{0.5}$+0.2*Ft*1000/($l_w$*$t_w$*144))/(Mu/Vu-$l_w$/2)]*$t_w$*0.8*$l_w$*144/1000

Determine Shear Carried by Steel — Vs = 140.062367 — Vs=Vu/ϕ -Vc

Determine Required Shear Reinforcing Requirements — ρ = 0.0002 — ρ=Vs/(0.8*l_w*t_w*144*fy)

11.10.6 - Equation 11-32 Shear Reinforcing Requirements — **ρ_n = 0.0025 MINIMUM STEEL GOVERNS**

2.0d) Horizontal Shear Reinforcing Requirements (max of 2a, 2b, 2c) — **ρ_n = 0.0025**

2.0e) Select Horizontal Shear Reinforcing — **Asn required per ft on each face = 0.72 in^2/ft each face** (ρ_n*12*t_w*12/2)

Use 1-#11@12"c/c EF Asn provided = 1.56 in^2/ft each face — **ρ_n (prov)=0.00542**

2.0f) Check Demand / Capacity Ratio for In-Plane Shear:

D/C = 0.53 — D/C=(Vu/ϕ)/[Vc+(Asn*2*fy*l_w*t_w*144/(12*t_w*12))]

3.0 Vertical Reinforcing Requirements

3.0a) ACI 349 21.6.5.5 and 11.10.9.4 - Minimum vertical reinforcing ratio : — hw/lw = 2.27

ρ_v (min) =0.0025 — If h_w/l_w>2.0, use: $\rho_{v\,min}$ =0.0025+0.5(2.5-h_w/l_w)(ρ_n-0.0025)<=ρ_n — If h_w/l_w<=2.0, use: ρ_v>=ρ_n

3.0b) Check Shear Friction Requirements

In plane shear per foot of wall:	86.16 kips/ft	(Vu/l_w)
Transverse shear per ft of wall:	20.00 kips/ft	(Vz)
Resultant Shear	88.45 kips/ft	$[(\text{in-plane shear})^2+(\text{transverse shear})^2]^{0.5}$

Calculate limiting shear friction strength at joint per ACI 349-11.7.5:

Vn<.2f'cAv for f'c = 5000 psi Vn=1000Av
Vn<800Av — The limiting value of 800Av controls

Vn (MAX) = 460.8 kips/ft **Vn(MAX>Resultant shear .....OK**

Calculate shear friction reinforcing requirements per ACI 349 - 11.7.4.1:

Vn = Avf*fy*μ — μ = 1.0 for concrete placed against hardened concrete intentionally roughened to a full amplitude of 1/4 inch (ACI 349-11.7.9)

Avf = Vu/2*ϕ*μ*fy (steel required per face)
Avf = 0.87 in^2/ft (steel required on each face for shear friction))

Calculate steel required for net Tension force

At = T/2*ϕ*fy*lw
At = 0.00 in^2/ft (steel required on each face for direct tension)

Steel Requirements for Shear Friction Avf + At

Av = 0.87 in^2/ft (steel required on each face for shear friction + direct tension)

ρv(req'd) = 0.0030 ($\rho_{v\ req'd}$=(2*Av)/(12*t_w*12)

3.0c) Vertical Reinforcing Requirements (max of 3a,3b) **ρ_v = 0.0030**

3.0d) Select Vertical Reinforcing **Asv required per ft on each face = 0.87 in²/ft each face** ($\rho_{v\ min}$*12*t_w*12/2)

Use 1-#11@6"c/c EF **Asv provided = 3.12 in²/ft each face** **ρ_v (prov)= 0.01083**

3.0e) Perform Strain-Compatible Section Analysis - For Axial Force (Tension) **Ft =** 0 kips

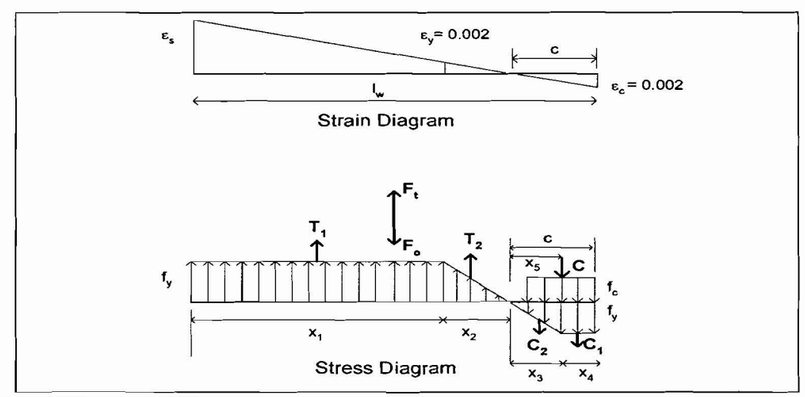

ϕ : Strength reduction factor (= 0.9 for tension, ACI 349 9.3.2.2), ϕ = 0.9
c : Distance from compression face to neutral axis (ft)
l_w : Length of wall (ft)
$\varepsilon_{s\_max} = [(l_w - c) / c] * \varepsilon_c$
$X_1 = l_w - c - X_2$ (ft) (length of wall with tension steel reinforcing steel strain > ε_y)
$X_2 = X_3 = (\varepsilon_y / \varepsilon_c) * c$ (ft) (length of wall with tension / compression steel reinforcing steel strain < ε_y)
$X_4 = c - X_3$ (ft) (length of wall with compression steel reinforcing steel strain > ε_y)
$T_1 = X_1 * As * fy$ (kips)
$T_2 = C_2 = 0.5 * X_2 * As * fy$ (kips)
$C_1 = X_4 * As * fy$ (kips)
$C = 0.85 * 0.8 * c * t_w * f'_c * 144$ (kips)
Balanced condition : Tension = Compression, $T_1+T_2-C_2-C_1-C+Ft/\phi = 0$.
M_u : Total moment capacity = $\phi\{T_1(X_2+X_1/2) + T_2(X_2*2/3) + C(c-0.8*c/2) + F_t(l_w/2-c)/\phi + C_2(X_3*2/3) + C_1(X_3+X_4/2)\}$, (kip-ft)

Using Goal Seek to find "c" and "Mu"

c (ft)	l_w - c (ft)	ε_{s_max}	X_1 (ft)	X_2=X_3 (ft)	X_4 (ft)	T_1 (k)	T_2=C_2 (k)	C_1 (k)	C (k)	$T_1+T_2-C_2-C_1-C+F_t/\phi$	M_u (k-ft)
3.53	21.97	0.0125	18.45	3.53	0.00	6906	660	0	6906	0.000	95198

Verified that equations were correct

c (ft)	l_w - c (ft)	ε_{s_max}	X_1 (ft)	X_2=X_3 (ft)	X_4 (ft)	T_1 (k)	T_2=C_2 (k)	C_1 (k)	C (k)	$T_1+T_2-C_2-C_1-C+F_t/\phi$	M_u (k-ft)
3	22.5	0.0150	19.50	3.00	0.00	7300.8	561.6	0	5875	1426	95316
5	20.5	0.0082	15.50	5.00	0.00	5803.2	936	0	9792	-3989	98646

4	21.5	0.0108	17.50	4.00	0.00	6552	748.8	0	7834	-1282	95699

Perform Strain-Compatible Section Analysis - For Axial Force (Comp) **Fc =** 4615 kips

ϕ : Strength reduction factor (= 0.7 to 0.9 for comp, ACI 349 9.3.2.2), $\phi =$ 0.7743
If Fc<=0, ϕ=0.9; if Fc>0, ϕ=0.9-0.2*Fc/(0.1*Acv*144*f'_c/1000)

Using Goal Seek to find "c" and "Mu"

c (ft)	l_w - c (ft)	ε_{s_max}	X_1 (ft)	X_2=X_3 (ft)	X_4 (ft)	T_1 (k)	T_2=C_2 (k)	C_1 (k)	C (k)	T_1+T_2-C_2-C_1-C+F_c/ϕ	M_u (k-ft)
5.73	19.77	0.0069	14.04	5.73	0.00	5258	1072	0	11218	0.000	120511

Verified that equations were correct

c (ft)	l_w - c (ft)	ε_{s_max}	X_1 (ft)	X_2=X_3 (ft)	X_4 (ft)	T_1 (k)	T_2=C_2 (k)	C_1 (k)	C (k)	T_1+T_2-C_2-C_1-C+F_c/ϕ	M_u (k-ft)
6	19.5	0.0065	13.50	6.00	0.00	5054.4	1123.2	0	11750	-736	120764
7	18.5	0.0053	11.50	7.00	0.00	4305.6	1310.4	0	13709	-3443	123097
5	20.5	0.0082	15.50	5.00	0.00	5803.2	936	0	9792	1971	120637

3.0f) Check Demand / Capacity Ratio for In-Plane Moment:

Vertical Reinforcing Ratio Provided by Design : ρ_v (prov)= 0.0108 1-#11@6"c/c EF ρ_v = (2*Asv)/(12*t_w*12)
D/C = (in-plane moment Mz) / (Min of Mu-ten, Mu-comp) D/C = 0.50 **Section Adequate**
Vertical Reinforcing Ratio Required for In-Plane Moment: $\rho_{vi\ req}$ = 0.0054 $\rho_{v\ req} = \rho_v$*(D/C)

3.0g) Consider Out-of-Plane Moment:

Vertical Reinf Ratio Required for Out-of-Plane Bending: $\rho_{vt\ req}$ = 0.00186 (per face) $\rho f_y bd^2*(1-.59\rho f_y/f'_c)=Mu/\phi$ solve for ρ Ref. 2.2.19, Section 4-3

3.0h) Total Reinforcing required for axial force, in-plane and out of plane bending ρ_v = 0.0072 = $\rho_{vi}+\rho_{vt} > 2\rho_{vt}$

D/C = ρ_v(reqd) / ρ_v (prov) D/C = 0.67 **Section Adequate** = ρ_v(req'd) / ρ_v(prov)

4.0 Boundary Elements:

h_w / l_w = 2.27 Concrete Strain limited to .002 No Need To Check for Boundary Elements

5.0 Out-of-Plane Shear:

Nominal Shear Strength Provided by The Concrete Vc=2*(f'c)$^{1/2}$*b*d Vc = 73.0 kips/ft width of wall

Check Demand / Capacity Ratio: D/C = 0.32 No Shear Reinforcement Required
D/C = (out-of-plane shear Vz) / (0.85*Vc)

6.0 Tabulate Reinforcement Requirements And D/C Ratios:

Use 4 ft thick wall with 1-#11@12"c/c EF Horizontal Reinforcement
1-#11@6"c/c EF Vertical Reinforcement.

For Shear on Gross Section:	**D/C =**	**0.44**
For In-Plane Shear:	**D/C =**	**0.53**
For Out-of-Plane Shear:	**D/C =**	**0.32**
Bending + axial Loads	**D/C =**	**0.67**

Boundary Elements **D/C= BOUNDARY ELEMENTS NOT REQUIRED**

6.4.6
Buttress Wall (48" thick) Design Loads, column line 2

because column line "2" has a crane load case along it which envelopes the other buttress wall.

Follow notation below to convert from SAP2000 labeling (i.e. F1, M22...) to appropriate design forces and moments.

SCUT8a & SCUT8b
F1 = In Plane Shear
F3 = Axial Force, Compression (+) / Tension (-)
M2 = In Plane Moment

Shell Element Forces and Moments
M22 = Out of Plane Moment
M12 = Twisting Moment
V13 = Out of Plane Shear
V23 = Out of Plane Shear

Accidental torsion factor= 15% (See assumption 3.1.4)

Section Cut	DL+LL						Seismic (SRSS)					
	F1	F2	F3	M1	M2	M3	F1	F2	F3	M1	M2	M3
	Kip	Kip	Kip	Kip-ft	Kip-ft	Kip-ft	Kip	Kip	Kip	Kip-ft	Kip-ft	Kip-ft
SCUT8a	-72	-	812	-	-157	-	884	-	2497	-	13620	-
SCUT8b	72	-	803	-	222	-	858	-	2461	-	13328	-

MAX MIN	Element Forces - Area Shells DL+LL					MAX	Element Forces - Area Shells SRSS				
	M11	M22	M12	V13	V23		M11	M22	M12	V13	V23
	Kip-ft/ft	Kip-ft/ft	Kip-ft/ft	Kip/ft	Kip/ft		Kip-ft/ft	Kip-ft/ft	Kip-ft/ft	Kip/ft	Kip/ft
MAX	2	2	2	0	0	MAX	158	90	28	15	11
MIN	-3	-2	-2	0	0						

Loads with accidental torsion factor

Section Cut	DL+LL						Seismic (SRSS)					
	F1	F2	F3	M1	M2	M3	F1	F2	F3	M1	M2	M3
	Kip	Kip	Kip	Kip-ft	Kip-ft	Kip-ft	Kip	Kip	Kip	Kip-ft	Kip-ft	Kip-ft
SCUT8a	-82	-	934	-	-181	-	1016	-	2872	-	15663	-
SCUT8b	83	-	924	-	255	-	987	-	2831	-	15327	-

Loads with accidental torsion factor

MAX MIN	Element Forces - Area Shells DL+LL					MAX	Element Forces - Area Shells SRSS				
	M11	M22	M12	V13	V23		M11	M22	M12	V13	V23
	Kip-ft/ft	Kip-ft/ft	Kip-ft/ft	Kip/ft	Kip/ft		Kip-ft/ft	Kip-ft/ft	Kip-ft/ft	Kip/ft	Kip/ft
MAX	2	2	2	0	0	MAX	181	104	32	17	13
MIN	-3	-2	-2	0	-1						

Maximum Load Combination

Section Cut	DL+LL+Seismic (SRSS)						DL+LL-Seismic (SRSS)					
	F1	F2	F3	M1	M2	M3	F1	F2	F3	M1	M2	M3
	Kip	Kip	Kip	Kip-ft	Kip-ft	Kip-ft	Kip	Kip	Kip	Kip-ft	Kip-ft	Kip-ft
SCUT8a	934	-	3806	-	15482	-	-1099	-	-1938	-	-15844	-
SCUT8b	1070	-	3754	-	15582	-	-904	-	-1907	-	-15071	-

Maximum Load Combination

MAX MIN	DL+LL+Seismic(SRSS)					MAX MIN	DL+LL-Seismic(SRSS)				
	M11	M22	M12	V13	V23		M11	M22	M12	V13	V23
	Kip-ft/ft	Kip-ft/ft	Kip-ft/ft	Kip/ft	Kip/ft		Kip-ft/ft	Kip-ft/ft	Kip-ft/ft	Kip/ft	Kip/ft
MAX	183	106	34	17	13	MAX	-180	-101	-30	-16	-12
MIN	178	101	30	16	12	MIN	-185	-106	-34	-17	-13

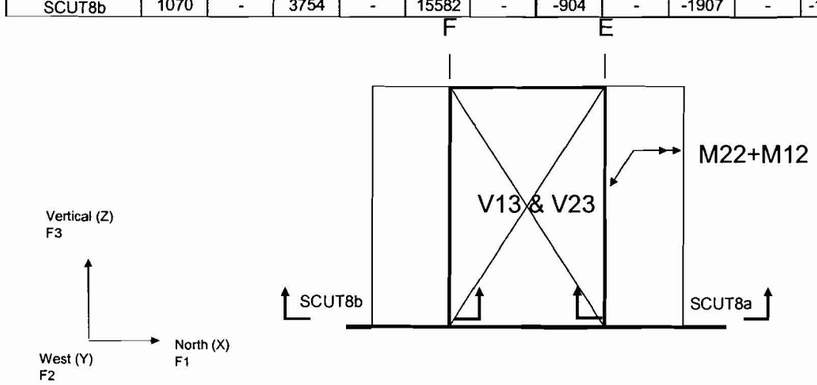

BUTTRESS WALL AT COL. 2 ---- ELEVATION

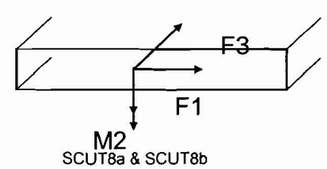

6.4.6.1 BUTTRESS WALL REINFORCEMENT, COLUMN LINE 2

Buttress Wall COL 2-SCUT8a---D+L-SRSS

Design Loads			Shear Wall Section Properties			Concrete & Rebar Properties		
Axial Force (-Tension)	Ft =	-1938 kips	Height of Wall (segment)	h_w =	58 ft	Concrete Design Strength	f'c =	5000 psi
Axial Force (+Comp)	Fc =	0 kips	Ht of Wall Between Floors	H =	58 ft	Concrete Strain	ε_c =	0.002
In plane shear	Vu =	1099 kips	Length of Wall (Segment)	l_w =	17 ft	Rebar Yield Strength	fy =	60 ksi
In plane Moment	Mz =	15844 ft-kips	Thickness of Wall	t_w =	4 ft	Rebar Yield Strain	ε_y =	0.002
			Shear Area of Wall (Segment)	Acv = l_w*t_w =	68 ft^2	Min Steel Required	ρ_{min} =	0.0025
						Concrete Cover		5 in
Out of plane shear	Vz =	17 kips/ft				(Use 5" = 2" clear cover + diameter of the outer layer rebar + 1/2 diameter of the inner layer rebar)		
Out of plane Moment	My =	140 ft-kips/ft (M22+M12)						

Note: For ACI 349, see Ref. 2.2.14, for section 1.0 to 6.0 of this design subset.

1.0 Check Shear on gross section - ACI 349: 21.6.5.6

Nominal Shear Capacity = 8*Acv*(f'c) $^{1/2}$ Vn (kips) = 5539

Factored Shear Load = Vu / ϕ Vu/ϕ (kips)= 1831.7
(ϕ = .6 per ACI 349 - 9.3.4)

Demand Capacity Ratio
Check Code 21.6.5.6 Demand/Capacity Ratio D/C = (Vu/ϕ)/Vn D/C = 0.33 **SHEAR WALL THICKNESS OK**

2.0 Horizontal Reinforcing Requirements

2.0a) ACI 349 - 21.6.5.3 Requirements

Determine α_c : h_w / l_w = 3.41 α_c = 2 α_c=3 for h_w/l_w<1.5, α_c varies linearly from 3 for h_w/l_w=1.5 to 2 for h_w/l_w=2.

Determine Concrete Shear Capacity Vc=Acv*α_c*(f'c) $^{1/2}$ Vc = 1384.8 kips

Determine Shear Carried by Steel Vs=Vu/ϕ -Vc Vs = 446.9 kips

Determine Required Shear Reinforcing ρ=Vs/(fy*Acv) ρ = 0.0008

21.6.5.3 Shear Reinforcing Requirements ρ_n = **0.0025** MINIMUM STEEL GOVERNS

2.0b) ACI 349 - 11.10.6 Equation 11-31 Requirements

Determine Concrete Shear Capacity Vc = 1440.3 kips Vc=3.3*(f'$_c$)$^{0.5}$*(0.8*t_w*l_w)+F_t*0.8*l_w/(4*l_w)

Determine Shear Carried by Steel Vs=Vu/ϕ -Vc Vs = 391.3 kips

Determine Required Shear Reinforcing ρ = 0.0008 ρ=Vs/(0.8*l_w*t_w*144*fy)

11.10.6 - Equation 11-31 Shear Reinforcing Requirements ρ_n = **0.0025** MINIMUM STEEL GOVERNS

2.0c) ACI 349 - 11.10.6 Equation 11-32 Requirements

Check Bounding Case Mu/Vu - l_w/2 = 5.92 **Equation 11-32 APPLICABLE**

Determine Concrete Shear Capacity Vc= 1430.83134 Vc=[0.6*f'$_c$$^{0.5}$+$l_w$*(1.25*f'$_c$$^{0.5}$+0.2*Ft*1000/($l_w$*$t_w$*144))/(Mu/Vu-$l_w$/2)]*$t_w$*0.8*$l_w$*144/1000

Determine Shear Carried by Steel Vs = 400.83533 Vs=Vu/ϕ -Vc

Determine Required Shear Reinforcing Requirements ρ = 0.0009 ρ=Vs/(0.8*l_w*t_w*144*fy)

11.10.6 - Equation 11-32 Shear Reinforcing Requirements ρ_n = **0.0025** **MINIMUM STEEL GOVERNS**

2.0d) Horizontal Shear Reinforcing Requirements (max of 2a, 2b, 2c) ρ_n = **0.0025**

2.0e) Select Horizontal Shear Reinforcing **Asn required per ft on each face =** **0.72** **in^2/ft each face** (ρ_n*12*t_w*12/2)

Use 1-#11@12"c/c EF **Asn provided =** **1.56** **in^2/ft each face** ρ_n **(prov)=0.00542**

2.0f) Check Demand / Capacity Ratio for In-Plane Shear:

D/C = 0.40 D/C=(Vu/ϕ)/[Vc+(Asn*2*fy*l_w*t_w*144/(12*t_w*12))]

3.0 Vertical Reinforcing Requirements

3.0a) ACI 349 21.6.5.5 and 11.10.9.4 - Minimum vertical reinforcing ratio : hw/lw = 3.41

If h_w/l_w>2.0, use: $\rho_{v\,min}$ =0.0025+0.5(2.5-h_w/l_w)(ρ_n-0.0025)<=ρ_n

ρ_v (min) =**0.0025** If h_w/l_w<=2.0, use: ρ_v>=ρ_n

3.0b) Check Shear Friction Requirements

In plane shear per foot of wall: 64.65 kips/ft (V_u/l_w)

Transverse shear per ft of wall: 17.00 kips/ft (Vz)

Resultant Shear 66.84 kips/ft $[(\text{in-plane shear})^2+(\text{transverse shear})^2]^{0.5}$

Calculate limiting shear friction strength at joint per ACI 349-11.7.5:

Vn<.2f'cAv for f'c = 5000 psi Vn=1000Av
Vn<800Av The limiting value of 800Av controls

Vn (MAX) = 460.8 kips/ft **Vn(MAX>Resultant shear .....OK**

Calculate shear friction reinforcing requirements per ACI 349 - 11.7.4.1:

Vn = Avf*fy*μ μ = 1.0 for concrete placed against hardened concrete intentionally roughened to a full amplitude of 1/4 inch (ACI 349-11.7.9)

Avf = Vu/2*ϕ*μ*fy (steel required per face)
Avf = 0.66 in^2/ft (steel required on each face for shear friction))

Calculate steel required for net Tension force

At = T/2*ϕ*fy*lw
At = 1.12 in^2/ft (steel required on each face for direct tension)

Steel Requirements for Shear Friction Avf + At

Av = 1.77 in^2/ft (steel required on each face for shear friction + direct tension)

ρv(req'd) = 0.0062 ($\rho_{v\ req'd}$=(2*Av)/(12*t_w*12)

3.0c) Vertical Reinforcing Requirements (max of 3a,3b) **ρ_v = 0.0062**

3.0d) Select Vertical Reinforcing **Asv required per ft on each face =** **1.77 in^2/ft each face** ($\rho_{v\ min}$*12*t_w*12/2)

Use 1-#11@6"c/c EF **Asv provided = 3.12 in^2/ft each face** **ρ_v (prov)= 0.01083**

3.0e) Perform Strain-Compatible Section Analysis - For Axial Force (Tension) **Ft =** -1938 kips

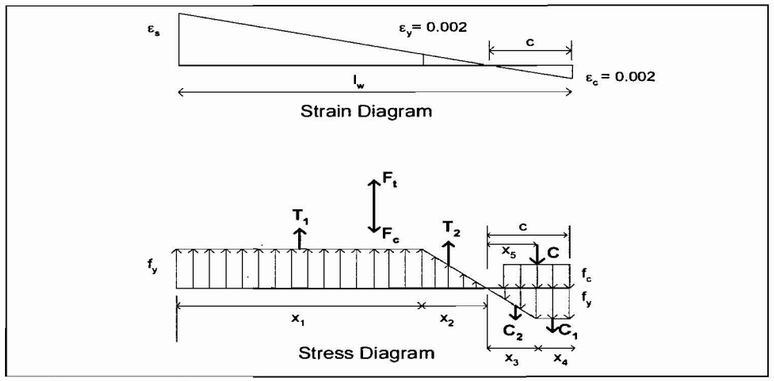

ϕ : Strength reduction factor (= 0.9 for tension, ACI 349 9.3.2.2), ϕ = 0.9
c : Distance from compression face to neutral axis (ft)
l_w : Length of wall (ft)
$\varepsilon_{s\_max} = [(l_w - c) / c] * \varepsilon_c$
$X_1 = l_w - c - X_2$ (ft) (length of wall with tension steel reinforcing steel strain > ε_y)
$X_2 = X_3 = (\varepsilon_y / \varepsilon_c) * c$ (ft) (length of wall with tension / compression steel reinforcing steel strain < ε_y)
$X_4 = c - X_3$ (ft) (length of wall with compression steel reinforcing steel strain > ε_y)
$T_1 = X_1 * As * fy$ (kips)
$T_2 = C_2 = 0.5 * X_2 * As * fy$ (kips)
$C_1 = X_4 * As * fy$ (kips)
$C = 0.85 * 0.8 * c * t_w * f'_c * 144$ (kips)
Balanced condition : Tension = Compression, $T_1+T_2-C_2-C_1-C+Ft/\phi = 0$.
M_u : Total moment capacity = $\phi\{T_1(X_2+X_1/2) + T_2(X_2*2/3) + C(c-0.8*c/2) + F_t(l_w/2-c)/\phi + C_2(X_3*2/3) + C_1(X_3+X_4/2)\}$, (kip-ft)

Using Goal Seek to find "c" and "Mu"

c (ft)	l_w - c (ft)	ε_{s_max}	X_1 (ft)	X_2=X_3 (ft)	X_4 (ft)	T_1 (k)	T_2=C_2 (k)	C_1 (k)	C (k)	$T_1+T_2-C_2-C_1-C+F_t/\phi$	M_u (k-ft)
1.56	15.44	0.0199	13.89	1.56	0.00	5200	291	0	3047	0.000	29424

Verified that equations were correct

c (ft)	l_w - c (ft)	ε_{s_max}	X_1 (ft)	X_2=X_3 (ft)	X_4 (ft)	T_1 (k)	T_2=C_2 (k)	C_1 (k)	C (k)	$T_1+T_2-C_2-C_1-C+F_t/\phi$	M_u (k-ft)
2	15	0.0150	13.00	2.00	0.00	4867.2	374.4	0	3917	-1203	29766
3	14.0	0.0093	11.00	3.00	0.00	4118.4	561.6	0	5875	-3910	32386
1	16	0.0320	15.00	1.00	0.00	5616	187.2	0	1958	1504	29710

Perform Strain-Compatible Section Analysis - For Axial Force (Comp) **Fc =** 0 kips

ϕ : Strength reduction factor (= 0.7 to 0.9 for comp, ACI 349 9.3.2.2), ϕ = 0.9000
If Fc<=0, ϕ=0.9; if Fc>0, ϕ=0.9-0.2*Fc/(0.1*Acv*144*f'_c/1000)

Using Goal Seek to find "c" and "Mu"

c (ft)	l_w - c (ft)	ε_{s_max}	X_1 (ft)	X_2=X_3 (ft)	X_4 (ft)	T_1 (k)	T_2=C_2 (k)	C_1 (k)	C (k)	T_1+T_2-C_2-C_1-C+F_c/ϕ	M_u (k-ft)
2.35	14.65	0.0125	12.30	2.35	0.00	4604	440	0	4604	0.000	42310

Verified that equations were correct

c (ft)	l_w - c (ft)	ε_{s_max}	X_1 (ft)	X_2=X_3 (ft)	X_4 (ft)	T_1 (k)	T_2=C_2 (k)	C_1 (k)	C (k)	T_1+T_2-C_2-C_1-C+F_c/ϕ	M_u (k-ft)
3	14	0.0093	11.00	3.00	0.00	4118.4	561.6	0	5875	-1757	43045
4	13.0	0.0065	9.00	4.00	0.00	3369.6	748.8	0	7834	-4464	46292
2	15	0.0150	13.00	2.00	0.00	4867.2	374.4	0	3917	950	42363

3.0f) Check Demand / Capacity Ratio for In-Plane Moment:

Vertical Reinforcing Ratio Provided by Design : ρ_v (prov)= 0.0108 1-#11@6"c/c EF ρ_v = (2*Asv)/(12*t_w*12)
D/C = (in-plane moment Mz) / (Min of Mu-ten, Mu-comp) D/C = 0.54 **Section Adequate**
Vertical Reinforcing Ratio Required for In-Plane Moment: $\rho_{vl\ req}$ = 0.0058 $\rho_{v\ req}$ = ρ_v*(D/C)

3.0g) Consider Out-of-Plane Moment:

Vertical Reinf Ratio Required for Out-of-Plane Bending: $\rho_{vt\ req}$ = 0.00142 (per face) $\rho f_y bd^2*(1-.59\rho f_y/f'_c)=Mu/\phi$ solve for ρ Ref. 2.2.19, Section 4-3

3.0h) Total Reinforcing required for axial force, in-plane and out of plane bending ρ_v = 0.0072 = $\rho_{vl}+\rho_{vt} > 2\rho_{vt}$

D/C = ρ_v(reqd) / ρ_v (prov) D/C = 0.67 **Section Adequate** = ρ_{vt}(req'd) / ρ_v(prov)

4.0 Boundary Elements:

h_w / l_w = 3.41 Concrete Strain limited to .002 No Need To Check for Boundary Elements

5.0 Out-of-Plane Shear:

Nominal Shear Strength Provided by The Concrete Vc=2*(f'c)$^{1/2}$*b*d Vc = 73.0 kips/ft width of wall

Check Demand / Capacity Ratio: D/C = 0.27 No Shear Reinforcement Required
D/C = (out-of-plane shear Vz) / (0.85*Vc)

6.0 Tabulate Reinforcement Requirements And D/C Ratios:

Use 4 ft thick wall with 1-#11@12"c/c EF Horizontal Reinforcement
1-#11@6"c/c EF Vertical Reinforcement.

For Shear on Gross Section: D/C = 0.33
For In-Plane Shear: D/C = 0.40
For Out-of-Plane Shear: D/C = 0.27
Bending + axial Loads D/C = 0.67

Boundary Elements D/C= BOUNDARY ELEMENTS NOT REQUIRED

Buttress Wall COL 2-SCUT8a---D+L+SRSS

Design Loads

Axial Force (-Tension)	**Ft =**	0	kips
Axial Force (+Comp)	**Fc =**	3806	kips
In plane shear	**Vu =**	934	kips
In plane Moment	**Mz =**	15482	ft-kips
Out of plane shear	**Vz =**	17	kips/ft
Out of plane Moment	**My =**	140	ft-kips/ft (M22+M12)

Shear Wall Section Properties

Height of Wall (segment)	h_w =	58	ft
Ht of Wall Between Floors	H =	58	ft
Length of Wall (Segment)	l_w =	17	ft
Thickness of Wall	t_w =	4	ft
Shear Area of Wall (Segment)	Acv = l_w*t_w =	68	ft^2

Concrete & Rebar Properties

Concrete Design Strength	f'c =	5000	psi
Concrete Strain	ε_c =	0.002	
Rebar Yield Strength	fy =	60	ksi
Rebar Yield Strain	ε_y =	0.002	
Min Steel Required	ρ_{min} =	0.0025	
Concrete Cover		5	in

(Use 5" = 2" clear cover + diameter of the outer layer rebar + 1/2 diameter of the inner layer rebar)

Note: For ACI 349, see Ref. 2.2.14, for section 1.0 to 6.0 of this design subset.

1.0 Check Shear on gross section - ACI 349: 21.6.5.6

Nominal Shear Capacity = 8*Acv*(f'c) $^{1/2}$ — Vn (kips) = 5539

Factored Shear Load = Vu / ϕ — Vu/ϕ (kips)= 1556.7

(ϕ = .6 per ACI 349 - 9.3.4)

Demand Capacity Ratio

Check Code 21.6.5.6 Demand/Capacity Ratio — D/C = (Vu/ϕ)/Vn — D/C = 0.28 **SHEAR WALL THICKNESS OK**

2.0 Horizontal Reinforcing Requirements

2.0a) ACI 349 - 21.6.5.3 Requirements

Determine α_c : h_w / l_w = 3.41 — α_c = 2 — α_c=3 for h_w/l_w<1.5, α_c varies linearly from 3 for h_w/l_w=1.5 to 2 for h_w/l_w=2.

Determine Concrete Shear Capacity Vc=Acv*α_c*(f'c) $^{1/2}$ — Vc = 1384.8 kips

Determine Shear Carried by Steel Vs=Vu/ϕ -Vc — Vs = 171.9 kips

Determine Required Shear Reinforcing ρ=Vs/(fy*Acv) — ρ = 0.0003

21.6.5.3 Shear Reinforcing Requirements — **ρ_n = 0.0025** MINIMUM STEEL GOVERNS

2.0b) ACI 349 - 11.10.6 Equation 11-31 Requirements

Determine Concrete Shear Capacity — Vc = 1827.9 kips — Vc=3.3*(f'$_c$)$^{0.5}$*(0.8*t_w*l_w)+F_t*0.8*l_w/(4*l_w)

Determine Shear Carried by Steel Vs=Vu/ϕ -Vc — Vs = 0.0 kips

Determine Required Shear Reinforcing — ρ = 0.0000 — ρ=Vs/(0.8*l_w*t_w*144*fy)

11.10.6 - Equation 11-31 Shear Reinforcing Requirements — **ρ_n = 0.0025** MINIMUM STEEL GOVERNS

2.0c) ACI 349 - 11.10.6 Equation 11-32 Requirements

Check Bounding Case Mu/Vu - l_w/2 = 8.08 **Equation 11-32 APPLICABLE**

Determine Concrete Shear Capacity — Vc= 1789.84994 — Vc=[0.6*f'$_c$$^{0.5}$+$l_w$*(1.25*f'$_c$$^{0.5}$+0.2*Ft*1000/($l_w$*$t_w$*144))/(Mu/Vu-$l_w$/2)]*$t_w$*0.8*$l_w$*144/1000

Determine Shear Carried by Steel — Vs = 0 — Vs=Vu/ϕ -Vc

Determine Required Shear Reinforcing Requirements — ρ = 0.0000 — ρ=Vs/(0.8*l_w*t_w*144*fy)

11.10.6 - Equation 11-32 Shear Reinforcing Requirements — **ρ_n = 0.0025 MINIMUM STEEL GOVERNS**

2.0d) Horizontal Shear Reinforcing Requirements (max of 2a, 2b, 2c) — **ρ_n = 0.0025**

2.0e) Select Horizontal Shear Reinforcing **Asn required per ft on each face =** **0.72** **in^2/ft each face** (ρ_n*12*t_w*12/2)

Use 1-#11@12"c/c EF **Asn provided =** **1.56** **in^2/ft each face** **ρ_n (prov)=0.00542**

2.0f) Check Demand / Capacity Ratio for In-Plane Shear:

D/C = 0.34 — D/C=(Vu/ϕ)/[Vc+(Asn*2*fy*l_w*t_w*144/(12*t_w*12))]

3.0 Vertical Reinforcing Requirements

3.0a) ACI 349 21.6.5.5 and 11.10.9.4 - Minimum vertical reinforcing ratio : — hw/lw = 3.41

If h_w/l_w>2.0, use: $\rho_{v\,min}$ =0.0025+0.5(2.5-h_w/l_w)(ρ_n-0.0025)<=ρ_n

ρ_v (min) =0.0025 — If h_w/l_w<=2.0, use: ρ_v>=ρ_n

3.0b) Check Shear Friction Requirements

In plane shear per foot of wall:	54.94 kips/ft	(Vu/l_w)
Transverse shear per ft of wall:	17.00 kips/ft	(Vz)
Resultant Shear	57.51 kips/ft	$[(\text{in-plane shear})^2+(\text{transverse shear})^2]^{0.5}$

Calculate limiting shear friction strength at joint per ACI 349-11.7.5:

Vn<.2f'cAv for f'c = 5000 psi Vn=1000Av
Vn<800Av — The limiting value of 800Av controls

Vn (MAX) = 460.8 kips/ft **Vn(MAX>Resultant shear .....OK**

Calculate shear friction reinforcing requirements per ACI 349 - 11.7.4.1:

Vn = Avf*fy*μ — μ = 1.0 for concrete placed against hardened concrete intentionally roughened to a full amplitude of 1/4 inch (ACI 349-11.7.9)

Avf = Vu/2*ϕ*μ*fy (steel required per face)
Avf = 0.56 in^2/ft (steel required on each face for shear friction))

Calculate steel required for net Tension force

At = T/2*ϕ*fy*lw
At = 0.00 in^2/ft (steel required on each face for direct tension)

Steel Requirements for Shear Friction Avf + At

Av = 0.56 in^2/ft (steel required on each face for shear friction + direct tension)

pv(req'd) = 0.0020 ($\rho_{v\,req'd}$=(2*Av)/(12*t_w*12)

3.0c) Vertical Reinforcing Requirements (max of 3a,3b) **ρ_v = 0.0025**

3.0d) Select Vertical Reinforcing **Asv required per ft on each face = 0.72 in^2/ft each face** ($\rho_{v\,min}$*12*t_w*12/2)

Use 1-#11@6"c/cEF **Asv provided = 3.12 in^2/ft each face** **ρ_v (prov)= 0.01083**

3.0e) Perform Strain-Compatible Section Analysis - For Axial Force (Tension) **Ft =** 0 kips

ϕ : Strength reduction factor (= 0.9 for tension, ACI 349 9.3.2.2), ϕ = 0.9
c : Distance from compression face to neutral axis (ft)
l_w : Length of wall (ft)
ε_{s_max} = [(l_w -c) / c] * ε_c
X_1 = l_w - c - X_2 (ft) (length of wall with tension steel reinforcing steel strain > ε_y)
X_2 = X_3 = (ε_y / ε_c) * c (ft) (length of wall with tension / compression steel reinforcing steel strain < ε_y)
X_4 = c - X_3 (ft) (length of wall with compression steel reinforcing steel strain > ε_y)
T_1 = X_1 * As * fy (kips)
T_2 = C_2 = 0.5 * X_2 * As * fy (kips)
C_1 = X_4 * As * fy (kips)
C = 0.85 * 0.8 * c * t_w * f'_c * 144 (kips)
Balanced condition : Tension = Compression, T_1+T_2-C_2-C_1-C+Ft/ϕ = 0.
M_u : Total moment capacity = ϕ{T_1(X_2+X_1/2) + T_2(X_2*2/3) + C(c-0.8*c/2) + F_t(l_w/2-c)/ϕ + C_2(X_3*2/3) + C_1(X_3+X_4/2)}, (kip-ft)

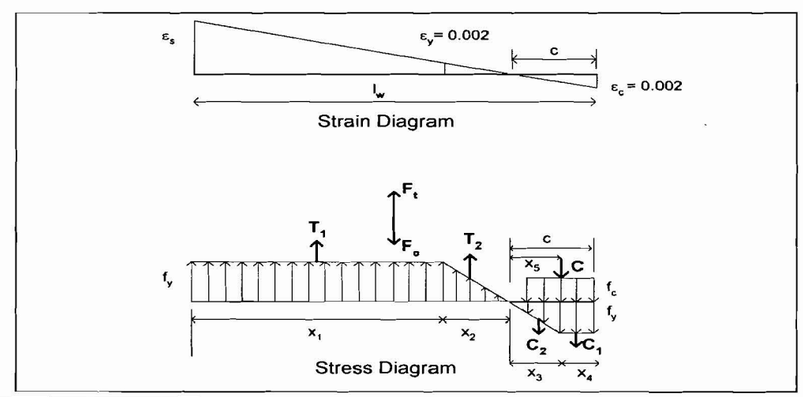

Using Goal Seek to find "c" and "Mu"

c (ft)	l_w - c (ft)	ε_{s_max}	X_1 (ft)	X_2=X_3 (ft)	X_4 (ft)	T_1 (k)	T_2=C_2 (k)	C_1 (k)	C (k)	T_1+T_2-C_2-C_1-C+F_t/ϕ	M_u (k-ft)
2.35	14.65	0.0125	12.30	2.35	0.00	4604	440	0	4604	0.000	42310

Verified that equations were correct

c (ft)	l_w - c (ft)	ε_{s_max}	X_1 (ft)	X_2=X_3 (ft)	X_4 (ft)	T_1 (k)	T_2=C_2 (k)	C_1 (k)	C (k)	T_1+T_2-C_2-C_1-C+F_t/ϕ	M_u (k-ft)
1	16	0.0320	15.00	1.00	0.00	5616	187.2	0	1958	3658	44245
3	14.0	0.0093	11.00	3.00	0.00	4118.4	561.6	0	5875	-1757	43045

2	15	0.0150	13.00	2.00	0.00	4867.2	374.4	0	3917	950	42363

Perform Strain-Compatible Section Analysis - For Axial Force (Comp) **Fc =** 3806 kips

ϕ : Strength reduction factor (= 0.7 to 0.9 for comp, ACI 349 9.3.2.2), ϕ = 0.7445
If Fc<=0, ϕ=0.9; if Fc>0, ϕ=0.9-0.2*Fc/(0.1*Acv*144*f'_c/1000)

Using Goal Seek to find "c" and "Mu"

c (ft)	l_w - c (ft)	ε_{s_max}	X_1 (ft)	X_2=X_3 (ft)	X_4 (ft)	T_1 (k)	T_2=C_2 (k)	C_1 (k)	C (k)	T_1+T_2-C_2-C_1-C+F_c/ϕ	M_u (k-ft)
4.24	12.76	0.0060	8.52	4.24	0.00	3190	794	0	8302	0.000	55469

Verified that equations were correct

c (ft)	l_w - c (ft)	ε_{s_max}	X_1 (ft)	X_2=X_3 (ft)	X_4 (ft)	T_1 (k)	T_2=C_2 (k)	C_1 (k)	C (k)	T_1+T_2-C_2-C_1-C+F_c/ϕ	M_u (k-ft)
3	14	0.0093	11.00	3.00	0.00	4118.4	561.6	0	5875	3355	56542
5	12.0	0.0048	7.00	5.00	0.00	2620.8	936	0	9792	-2059	56424
4	13	0.0065	9.00	4.00	0.00	3369.6	748.8	0	7834	648	55422

3.0f) Check Demand / Capacity Ratio for In-Plane Moment:

Vertical Reinforcing Ratio Provided by Design : ρ_v (prov)= 0.0108 1-#11@6"c/cEF ρ_v = (2*Asv)/(12*t_w*12)
D/C = (in-plane moment Mz) / (Min of Mu-ten, Mu-comp) D/C = 0.37 **Section Adequate**
Vertical Reinforcing Ratio Required for In-Plane Moment: $\rho_{vl\ req}$ = 0.0040 $\rho_{v\ req}$ = ρ_v*(D/C)

3.0g) Consider Out-of-Plane Moment:

Vertical Reinf Ratio Required for Out-of-Plane Bending: $\rho_{vt\ req}$ = 0.00142 (per face) $\rho f_y bd^2*(1-.59\rho f_y/f'_c)=Mu/\phi$ solve for ρ Ref. 2.2.19, Section 4-3

3.0h) Total Reinforcing required for axial force, in-plane and out of plane bending ρ_v = 0.0054 = $\rho_{vl}+\rho_{vt} > 2\rho_{vt}$

D/C = ρ_v(reqd) / ρ_v (prov) D/C = 0.50 **Section Adequate** = ρ_v(req'd) / ρ_v(prov)

4.0 Boundary Elements:

h_w / l_w = 3.41 Concrete Strain limited to .002 No Need To Check for Boundary Elements

5.0 Out-of-Plane Shear:

Nominal Shear Strength Provided by The Concrete Vc=2*(f'c)$^{1/2}$*b*d Vc = 73.0 kips/ft width of wall

Check Demand / Capacity Ratio: D/C = 0.27 No Shear Reinforcement Required
D/C = (out-of-plane shear Vz) / (0.85*Vc)

6.0 Tabulate Reinforcement Requirements And D/C Ratios:

Use 4 ft thick wall with 1-#11@12"c/c EF Horizontal Reinforcement
1-#11@6"c/cEF Vertical Reinforcement.

For Shear on Gross Section:	**D/C =**	**0.28**
For In-Plane Shear:	**D/C =**	**0.34**
For Out-of-Plane Shear:	**D/C =**	**0.27**
Bending + axial Loads	**D/C =**	**0.50**

Boundary Elements **D/C= BOUNDARY ELEMENTS NOT REQUIRED**

Buttress Wall COL 2-SCUT8b---D+L-SRSS

Design Loads			Shear Wall Section Properties			Concrete & Rebar Properties		
Axial Force (-Tension)	Ft =	-1907 kips	Height of Wall (segment)	h_w =	58 ft	Concrete Design Strength	f'c =	5000 psi
Axial Force (+Comp)	Fc =	0 kips	Ht of Wall Between Floors	H =	58 ft	Concrete Strain	ε_c =	0.002
In plane shear	Vu =	904 kips	Length of Wall (Segment)	l_w =	17 ft	Rebar Yield Strength	fy =	60 ksi
In plane Moment	Mz =	15071 ft-kips	Thickness of Wall	t_w =	4 ft	Rebar Yield Strain	ε_y =	0.002
			Shear Area of Wall (Segment)	Acv = l_w*t_w =	68 ft^2	Min Steel Required	ρ_{min} =	0.0025
						Concrete Cover		5 in
Out of plane shear	Vz =	17 kips/ft				(Use 5" = 2" clear cover + diameter of the outer layer rebar + 1/2 diameter of the inner layer rebar)		
Out of plane Moment	My =	140 ft-kips/ft (M22+M12)						

Note: For ACI 349, see Ref. 2.2.14, for section 1.0 to 6.0 of this design subset.

1.0 Check Shear on gross section - ACI 349: 21.6.5.6

Nominal Shear Capacity = 8*Acv*(f'c) $^{1/2}$ Vn (kips) = 5539

Factored Shear Load = Vu / ϕ Vu/ϕ (kips)= 1506.7
(ϕ = .6 per ACI 349 - 9.3.4)

Demand Capacity Ratio
Check Code 21.6.5.6 Demand/Capacity Ratio D/C = (Vu/ϕ)/Vn D/C = 0.27 **SHEAR WALL THICKNESS OK**

2.0 Horizontal Reinforcing Requirements

2.0a) ACI 349 - 21.6.5.3 Requirements

Determine α_c : h_w / l_w = 3.41 α_c = 2 α_c=3 for h_w/l_w<1.5, α_c varies linearly from 3 for h_w/l_w=1.5 to 2 for h_w/l_w=2.

Determine Concrete Shear Capacity Vc=Acv*α_c*(f'c) $^{1/2}$ Vc = 1384.8 kips

Determine Shear Carried by Steel Vs=Vu/ϕ -Vc Vs = 121.9 kips

Determine Required Shear Reinforcing ρ=Vs/(fy*Acv) ρ = 0.0002

21.6.5.3 Shear Reinforcing Requirements **ρ_n = 0.0025** MINIMUM STEEL GOVERNS

2.0b) ACI 349 - 11.10.6 Equation 11-31 Requirements

Determine Concrete Shear Capacity Vc = 1446.5 kips Vc=3.3*(f'$_c$)$^{0.5}$*(0.8*t_w*l_w)+F_t*0.8*l_w/(4*l_w)

Determine Shear Carried by Steel Vs=Vu/ϕ -Vc Vs = 60.1 kips

Determine Required Shear Reinforcing ρ = 0.0001 ρ=Vs/(0.8*l_w*t_w*144*fy)

11.10.6 - Equation 11-31 Shear Reinforcing Requirements **ρ_n = 0.0025** MINIMUM STEEL GOVERNS

2.0c) ACI 349 - 11.10.6 Equation 11-32 Requirements

Check Bounding Case Mu/Vu - l_w/2 = 8.17 **Equation 11-32 APPLICABLE**

Determine Concrete Shear Capacity Vc= 1138.05112 Vc=[0.6*f$_c^{0.5}$+l_w*(1.25*f$_c^{0.5}$+0.2*Ft*1000/(l_w*t_w*144))/(Mu/Vu-l_w/2)]*t_w*0.8*l_w*144/1000

Determine Shear Carried by Steel Vs = 368.61555 Vs=Vu/ϕ -Vc

Determine Required Shear Reinforcing Requirements ρ = 0.0008 ρ=Vs/(0.8*l_w*t_w*144*fy)

11.10.6 - Equation 11-32 Shear Reinforcing Requirements **ρ_n = 0.0025 MINIMUM STEEL GOVERNS**

2.0d) Horizontal Shear Reinforcing Requirements (max of 2a, 2b, 2c) **ρ_n = 0.0025**

2.0e) Select Horizontal Shear Reinforcing **Asn required per ft on each face = 0.72 in^2/ft each face** (ρ_n*12*t_w*12/2)

Use 1-#11@12"c/c EF **Asn provided = 1.56 in^2/ft each face** **ρ_n (prov)=0.00542**

2.0f) Check Demand / Capacity Ratio for In-Plane Shear:

D/C = 0.35 D/C=(Vu/ϕ)/[Vc+(Asn*2*fy*l_w*t_w*144/(12*t_w*12))]

3.0 Vertical Reinforcing Requirements

3.0a) ACI 349 21.6.5.5 and 11.10.9.4 - Minimum vertical reinforcing ratio : hw/lw = 3.41

If h_w/l_w>2.0, use: $\rho_{v\,min}$=0.0025+0.5(2.5-h_w/l_w)(ρ_n-0.0025)<=ρ_n

ρ_v (min) =0.0025 If h_w/l_w<=2.0, use: ρ_v>=ρ_n

3.0b) Check Shear Friction Requirements

In plane shear per foot of wall:	53.18 kips/ft	(Vu/l_w)
Transverse shear per ft of wall:	17.00 kips/ft	(Vz)
Resultant Shear	55.83 kips/ft	$[(\text{in-plane shear})^2+(\text{transverse shear})^2]^{0.5}$

Calculate limiting shear friction strength at joint per ACI 349-11.7.5:

Vn<.2f'cAv for f'c = 5000 psi Vn=1000Av
Vn<800Av — The limiting value of 800Av controls

Vn (MAX) = 460.8 kips/ft **Vn(MAX>Resultant shear .....OK**

Calculate shear friction reinforcing requirements per ACI 349 - 11.7.4.1:

Vn = Avf*fy*μ — μ = 1.0 for concrete placed against hardened concrete intentionally roughened to a full amplitude of 1/4 inch (ACI 349-11.7.9)

Avf = Vu/2*ϕ*μ*fy (steel required per face)
Avf = 0.55 in^2/ft (steel required on each face for shear friction))

Calculate steel required for net Tension force

At = T/2*ϕ*fy*lw
At = 1.10 in^2/ft (steel required on each face for direct tension)

Steel Requirements for Shear Friction Avf + At

Av = 1.65 in^2/ft (steel required on each face for shear friction + direct tension)

ρv(req'd) = 0.0057 $(\rho_{v\,req'd}=(2*Av)/(12*t_w*12)$

3.0c) Vertical Reinforcing Requirements (max of 3a,3b) ρ_v **= 0.0057**

3.0d) Select Vertical Reinforcing **Asv required per ft on each face = 1.65 in²/ft each face** $(\rho_{v\,min}*12*t_w*12/2)$

Use 1-#11@6"c/c EF Asv provided = 3.12 in²/ft each face ρ_v **(prov)= 0.01083**

3.0e) Perform Strain-Compatible Section Analysis - For Axial Force (Tension) **Ft =** -1907 kips

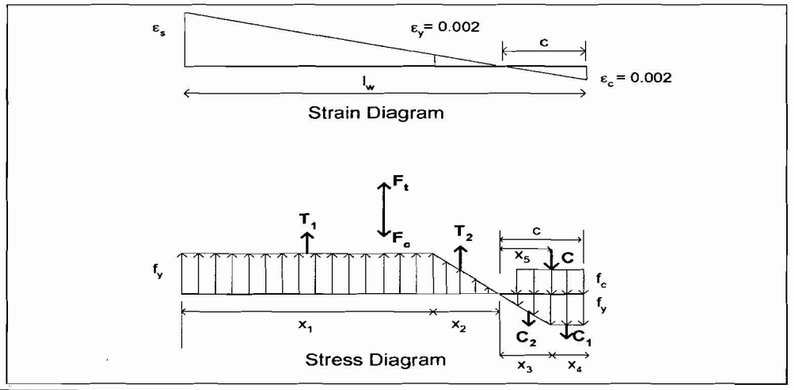

ϕ : Strength reduction factor (= 0.9 for tension, ACI 349 9.3.2.2), ϕ = 0.9
c : Distance from compression face to neutral axis (ft)
l_w : Length of wall (ft)
$\varepsilon_{s\_max} = [(l_w - c) / c] * \varepsilon_c$
$X_1 = l_w - c - X_2$ (ft) (length of wall with tension steel reinforcing steel strain > ε_y)
$X_2 = X_3 = (\varepsilon_y / \varepsilon_c) * c$ (ft) (length of wall with tension / compression steel reinforcing steel strain < ε_y)
$X_4 = c - X_3$ (ft) (length of wall with compression steel reinforcing steel strain > ε_y)
$T_1 = X_1 * As * fy$ (kips)
$T_2 = C_2 = 0.5 * X_2 * As * fy$ (kips)
$C_1 = X_4 * As * fy$ (kips)
$C = 0.85 * 0.8 * c * t_w * f'_c * 144$ (kips)
Balanced condition : Tension = Compression, $T_1+T_2-C_2-C_1-C+Ft/\phi = 0$.
M_u: Total moment capacity = $\phi\{T_1(X_2+X_1/2) + T_2(X_2*2/3) + C(c-0.8*c/2) + F_t(l_w/2-c)/\phi + C_2(X_3*2/3) + C_1(X_3+X_4/2)\}$, (kip-ft)

Using Goal Seek to find "c" and "Mu"

c (ft)	l_w - c (ft)	ε_{s_max}	X_1 (ft)	X_2=X_3 (ft)	X_4 (ft)	T_1 (k)	T_2=C_2 (k)	C_1 (k)	C (k)	$T_1+T_2-C_2-C_1-C+F_t/\phi$	M_u (k-ft)
1.57	15.43	0.0197	13.86	1.57	0.00	5190	294	0	3072	0.000	29642

Verified that equations were correct

c (ft)	l_w - c (ft)	ε_{s_max}	X_1 (ft)	X_2=X_3 (ft)	X_4 (ft)	T_1 (k)	T_2=C_2 (k)	C_1 (k)	C (k)	$T_1+T_2-C_2-C_1-C+F_t/\phi$	M_u (k-ft)
2	15	0.0150	13.00	2.00	0.00	4867.2	374.4	0	3917	-1168	29967
3	14.0	0.0093	11.00	3.00	0.00	4118.4	561.6	0	5875	-3876	32557

1	16	0.0320	15.00	1.00	0.00	5616	187.2	0	1958	1539	29942

Perform Strain-Compatible Section Analysis - For Axial Force (Comp) **Fc =** 0 kips

ϕ : Strength reduction factor (= 0.7 to 0.9 for comp, ACI 349 9.3.2.2), ϕ = 0.9000
If Fc<=0, ϕ=0.9; if Fc>0, ϕ=0.9-0.2*Fc/(0.1*Acv*144*f'_c/1000)

Using Goal Seek to find "c" and "Mu"

c (ft)	l_w - c (ft)	ε_{s_max}	X_1 (ft)	X_2=X_3 (ft)	X_4 (ft)	T_1 (k)	T_2=C_2 (k)	C_1 (k)	C (k)	T_1+T_2-C_2-C_1-C+F_c/ϕ	M_u (k-ft)
2.35	14.65	0.0125	12.30	2.35	0.00	4604	440	0	4604	0.000	42310

Verified that equations were correct

c (ft)	l_w - c (ft)	ε_{s_max}	X_1 (ft)	X_2=X_3 (ft)	X_4 (ft)	T_1 (k)	T_2=C_2 (k)	C_1 (k)	C (k)	T_1+T_2-C_2-C_1-C+F_c/ϕ	M_u (k-ft)
3	14	0.0093	11.00	3.00	0.00	4118.4	561.6	0	5875	-1757	43045
4	13.0	0.0065	9.00	4.00	0.00	3369.6	748.8	0	7834	-4464	46292
2	15	0.0150	13.00	2.00	0.00	4867.2	374.4	0	3917	950	42363

3.0f) Check Demand / Capacity Ratio for In-Plane Moment:

Vertical Reinforcing Ratio Provided by Design : ρ_v (prov)= 0.0108 1-#11@6"c/c EF ρ_v = (2*Asv)/(12*t_w*12)
D/C = (in-plane moment Mz) / (Min of Mu-ten, Mu-comp) D/C = 0.51 **Section Adequate**
Vertical Reinforcing Ratio Required for In-Plane Moment: $\rho_{vl\ req}$ = 0.0055 $\rho_{v\ req}$ = ρ_v*(D/C)

3.0g) Consider Out-of-Plane Moment:

Vertical Reinf Ratio Required for Out-of-Plane Bending: $\rho_{vt\ req}$ = 0.00142 (per face) $\rho f_y bd^2*(1-.59\rho f_y/f'_c)=Mu/\phi$ solve for ρ Ref. 2.2.19, Section 4-3

3.0h) Total Reinforcing required for axial force, in-plane and out of plane bending ρ_v = 0.0069 = ρ_{vl}+ρ_{vt} > 2ρ_{vt}

D/C = ρ_v(reqd) / ρ_v (prov) D/C = 0.64 **Section Adequate** = ρ_v(req'd) / ρ_v(prov)

4.0 Boundary Elements:

h_w / l_w = 3.41 Concrete Strain limited to .002 No Need To Check for Boundary Elements

5.0 Out-of-Plane Shear:

Nominal Shear Strength Provided by The Concrete Vc=2*(f'c)$^{1/2}$*b*d Vc = 73.0 kips/ft width of wall

Check Demand / Capacity Ratio: D/C = 0.27 No Shear Reinforcement Required
D/C = (out-of-plane shear Vz) / (0.85*Vc)

6.0 Tabulate Reinforcement Requirements And D/C Ratios:

Use 4 ft thick wall with 1-#11@12"c/c EF Horizontal Reinforcement
1-#11@6"c/c EF Vertical Reinforcement.

For Shear on Gross Section:	**D/C =**	**0.27**
For In-Plane Shear:	**D/C =**	**0.35**
For Out-of-Plane Shear:	**D/C =**	**0.27**
Bending + axial Loads	**D/C =**	**0.64**

Boundary Elements **D/C=** **BOUNDARY ELEMENTS NOT REQUIRED**

Buttress Wall COL 2-SCUT8b---D+L+SRSS

Design Loads

Axial Force (-Tension)	**Ft =**	0	kips
Axial Force (+Comp)	**Fc =**	3754	kips
In plane shear	**Vu =**	1070	kips
In plane Moment	**Mz =**	15582	ft-kips
Out of plane shear	**Vz =**	17	kips/ft
Out of plane Moment	**My =**	140	ft-kips/ft (M22+M12)

Shear Wall Section Properties

Height of Wall (segment)	h_w =	58	ft
Ht of Wall Between Floors	H =	58	ft
Length of Wall (Segment)	l_w =	17	ft
Thickness of Wall	t_w =	4	ft
Shear Area of Wall (Segment)	Acv = l_w*t_w =	68	ft^2

Concrete & Rebar Properties

Concrete Design Strength	f'c =	5000	psi
Concrete Strain	ε_c =	0.002	
Rebar Yield Strength	fy =	60	ksi
Rebar Yield Strain	ε_y =	0.002	
Min Steel Required	ρ_{min} =	0.0025	
Concrete Cover		5	in

(Use 5" = 2" clear cover + diameter of the outer layer rebar + 1/2 diameter of the inner layer rebar)

Note: For ACI 349, see Ref. 2.2.14, for section 1.0 to 6.0 of this design subset.

1.0 Check Shear on gross section - ACI 349: 21.6.5.6

Nominal Shear Capacity = 8*Acv*(f'c) $^{1/2}$ — Vn (kips) = 5539

Factored Shear Load = Vu / ϕ — Vu/ϕ (kips)= 1783.3

(ϕ = .6 per ACI 349 - 9.3.4)

Demand Capacity Ratio

Check Code 21.6.5.6 Demand/Capacity Ratio — D/C = (Vu/ϕ)/Vn — D/C = 0.32 **SHEAR WALL THICKNESS OK**

2.0 Horizontal Reinforcing Requirements

2.0a) ACI 349 - 21.6.5.3 Requirements

Determine α_c : h_w / l_w = 3.41 — α_c = 2 — α_c=3 for h_w/l_w<1.5, α_c varies linearly from 3 for h_w/l_w=1.5 to 2 for h_w/l_w=2.

Determine Concrete Shear Capacity Vc=Acv*α_c*(f'c) $^{1/2}$ — Vc = 1384.8 kips

Determine Shear Carried by Steel Vs=Vu/ϕ -Vc — Vs = 398.5 kips

Determine Required Shear Reinforcing ρ=Vs/(fy*Acv) — ρ = 0.0007

21.6.5.3 Shear Reinforcing Requirements — **ρ_n = 0.0025** MINIMUM STEEL GOVERNS

2.0b) ACI 349 - 11.10.6 Equation 11-31 Requirements

Determine Concrete Shear Capacity — Vc = 1827.9 kips — Vc=3.3*(f'$_c$)$^{0.5}$*(0.8*t_w*l_w)+F_t*0.8*l_w/(4*l_w)

Determine Shear Carried by Steel Vs=Vu/ϕ -Vc — Vs = 0.0 kips

Determine Required Shear Reinforcing — ρ = 0.0000 — ρ=Vs/(0.8*l_w*t_w*144*fy)

11.10.6 - Equation 11-31 Shear Reinforcing Requirements — **ρ_n = 0.0025** MINIMUM STEEL GOVERNS

2.0c) ACI 349 - 11.10.6 Equation 11-32 Requirements

Check Bounding Case Mu/Vu - l_w/2 = 6.06 — **Equation 11-32 APPLICABLE**

Determine Concrete Shear Capacity — Vc= 2273.88643 — Vc=[0.6*f'$_c$$^{0.5}$+$l_w$*(1.25*f'$_c$$^{0.5}$+0.2*Ft*1000/($l_w$*$t_w$*144))/(Mu/Vu-$l_w$/2)]*$t_w$*0.8*$l_w$*144/1000

Determine Shear Carried by Steel — Vs = 0 — Vs=Vu/ϕ -Vc

Determine Required Shear Reinforcing Requirements — ρ = 0.0000 — ρ=Vs/(0.8*l_w*t_w*144*fy)

11.10.6 - Equation 11-32 Shear Reinforcing Requirements — **ρ_n = 0.0025** **MINIMUM STEEL GOVERNS**

2.0d) Horizontal Shear Reinforcing Requirements (max of 2a, 2b, 2c) — **ρ_n = 0.0025**

2.0e) Select Horizontal Shear Reinforcing — **Asn required per ft on each face = 0.72 in^2/ft each face** — (ρ_n*12*t_w*12/2)

Use 1-#11@12"c/c EF — **Asn provided = 1.56 in^2/ft each face** — **ρ_n (prov)=0.00542**

2.0f) Check Demand / Capacity Ratio for In-Plane Shear:

D/C = 0.39 — D/C=(Vu/ϕ)/[Vc+(Asn*2*fy*l_w*t_w*144/(12*t_w*12))]

3.0 Vertical Reinforcing Requirements

3.0a) ACI 349 21.6.5.5 and 11.10.9.4 - Minimum vertical reinforcing ratio : — hw/lw = 3.41

If h_w/l_w>2.0, use: $\rho_{v\,min}$=0.0025+0.5(2.5-h_w/l_w)(ρ_n-0.0025)<=ρ_n

ρ_v (min) =0.0025 — If h_w/l_w<=2.0, use: ρ_v>=ρ_n

3.0b) Check Shear Friction Requirements

In plane shear per foot of wall:	62.94 kips/ft	(Vu/l_w)
Transverse shear per ft of wall:	17.00 kips/ft	(Vz)
Resultant Shear	65.20 kips/ft	$[(\text{in-plane shear})^2+(\text{transverse shear})^2]^{0.5}$

Calculate limiting shear friction strength at joint per ACI 349-11.7.5:

Vn<.2f'cAv for f'c = 5000 psi Vn=1000Av
Vn<800Av — The limiting value of 800Av controls

Vn (MAX) = 460.8 kips/ft **Vn(MAX>Resultant shear .....OK**

Calculate shear friction reinforcing requirements per ACI 349 - 11.7.4.1:

Vn = Avf*fy*μ — μ = 1.0 for concrete placed against hardened concrete intentionally roughened to a full amplitude of 1/4 inch (ACI 349-11.7.9)

Avf = Vu/2*ϕ*μ*fy (steel required per face)
Avf = 0.64 in^2/ft (steel required on each face for shear friction))

Calculate steel required for net Tension force

At = T/2*ϕ*fy*lw
At = 0.00 in^2/ft (steel required on each face for direct tension)

Steel Requirements for Shear Friction Avf + At

Av = 0.64 in^2/ft (steel required on each face for shear friction + direct tension)

ρv(req'd) = 0.0022 $(\rho_{v\ req'd}=(2*Av)/(12*t_w*12)$

3.0c) Vertical Reinforcing Requirements (max of 3a,3b) **ρ_v = 0.0025**

3.0d) Select Vertical Reinforcing **Asv required per ft on each face = 0.72 in^2/ft each face** $(\rho_{v\ min}*12*t_w*12/2)$

Use 1-#11@6"c/c EF **Asv provided = 3.12 in^2/ft each face** **ρ_v (prov)= 0.01083**

3.0e) Perform Strain-Compatible Section Analysis - For Axial Force (Tension) **Ft =** 0 kips

ϕ : Strength reduction factor (= 0.9 for tension, ACI 349 9.3.2.2), ϕ = 0.9
c : Distance from compression face to neutral axis (ft)
l_w : Length of wall (ft)
$\varepsilon_{s\_max} = [(l_w - c) / c] * \varepsilon_c$
$X_1 = l_w - c - X_2$ (ft) (length of wall with tension steel reinforcing steel strain > ε_y)
$X_2 = X_3 = (\varepsilon_y / \varepsilon_c) * c$ (ft) (length of wall with tension / compression steel reinforcing steel strain < ε_y)
$X_4 = c - X_3$ (ft) (length of wall with compression steel reinforcing steel strain > ε_y)
$T_1 = X_1 * As * fy$ (kips)
$T_2 = C_2 = 0.5 * X_2 * As * fy$ (kips)
$C_1 = X_4 * As * fy$ (kips)
$C = 0.85 * 0.8 * c * t_w * f'_c * 144$ (kips)
Balanced condition : Tension = Compression, $T_1+T_2-C_2-C_1-C+Ft/\phi = 0$.
M_u: Total moment capacity = $\phi\{T_1(X_2+X_1/2) + T_2(X_2*2/3) + C(c-0.8*c/2) + F_t(l_w/2-c)/\phi + C_2(X_3*2/3) + C_1(X_3+X_4/2)\}$, (kip-ft)

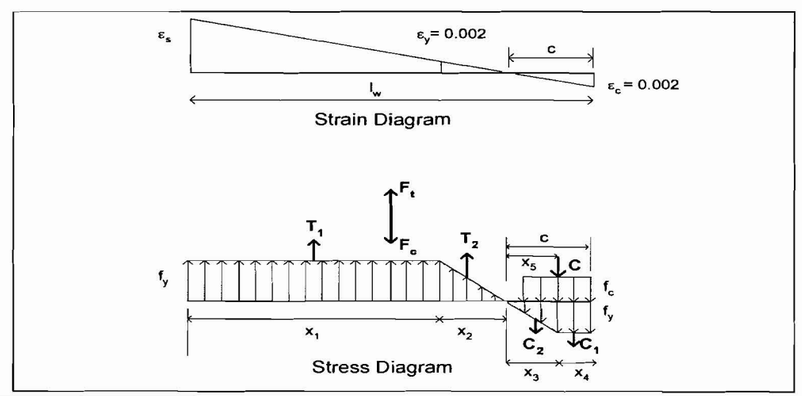

Using Goal Seek to find "c" and "Mu"

c (ft)	l_w - c (ft)	ε_{s_max}	X_1 (ft)	$X_2=X_3$ (ft)	X_4 (ft)	T_1 (k)	$T_2=C_2$ (k)	C_1 (k)	C (k)	$T_1+T_2-C_2-C_1-C+F_t/\phi$	M_u (k-ft)
2.35	14.65	0.0125	12.30	2.35	0.00	4604	440	0	4604	0.000	42310

Verified that equations were correct

c (ft)	l_w - c (ft)	ε_{s_max}	X_1 (ft)	$X_2=X_3$ (ft)	X_4 (ft)	T_1 (k)	$T_2=C_2$ (k)	C_1 (k)	C (k)	$T_1+T_2-C_2-C_1-C+F_t/\phi$	M_u (k-ft)
1	16	0.0320	15.00	1.00	0.00	5616	187.2	0	1958	3658	44245
3	14.0	0.0093	11.00	3.00	0.00	4118.4	561.6	0	5875	-1757	43045

2	15	0.0150	13.00	2.00	0.00	4867.2	374.4	0	3917	950	42363

Perform Strain-Compatible Section Analysis - For Axial Force (Comp) **Fc =** 3754 kips

ϕ : Strength reduction factor (= 0.7 to 0.9 for comp, ACI 349 9.3.2.2), ϕ = 0.7467
If Fc<=0, ϕ=0.9; if Fc>0, ϕ=0.9-0.2*Fc/(0.1*Acv*144*f'_c/1000)

Using Goal Seek to find "c" and "Mu"

c (ft)	l_w - c (ft)	ε_{s_max}	X_1 (ft)	X_2=X_3 (ft)	X_4 (ft)	T_1 (k)	T_2=C_2 (k)	C_1 (k)	C (k)	T_1+T_2-C_2-C_1-C+F_c/ϕ	M_u (k-ft)
4.21	12.79	0.0061	8.58	4.21	0.00	3214	788	0	8241	0.000	55344

Verified that equations were correct

c (ft)	l_w - c (ft)	ε_{s_max}	X_1 (ft)	X_2=X_3 (ft)	X_4 (ft)	T_1 (k)	T_2=C_2 (k)	C_1 (k)	C (k)	T_1+T_2-C_2-C_1-C+F_c/ϕ	M_u (k-ft)
3	14	0.0093	11.00	3.00	0.00	4118.4	561.6	0	5875	3271	56358
5	12.0	0.0048	7.00	5.00	0.00	2620.8	936	0	9792	-2143	56365
4	13	0.0065	9.00	4.00	0.00	3369.6	748.8	0	7834	564	55298

3.0f) Check Demand / Capacity Ratio for In-Plane Moment:

Vertical Reinforcing Ratio Provided by Design : ρ_v (prov)= 0.0108 1-#11@6"c/c EF ρ_v = (2*Asv)/(12*t_w*12)
D/C = (in-plane moment Mz) / (Min of Mu-ten, Mu-comp) D/C = 0.37 **Section Adequate**
Vertical Reinforcing Ratio Required for In-Plane Moment: $\rho_{vi\ req}$ = 0.0040 $\rho_{v\ req}$ = ρ_v*(D/C)

3.0g) Consider Out-of-Plane Moment:

Vertical Reinf Ratio Required for Out-of-Plane Bending: $\rho_{vt\ req}$ = 0.00142 (per face) $\rho f_y bd^2(1-.59\rho f_y/f'_c)=Mu/\phi$ solve for ρ Ref. 2.2.19, Section 4-3

3.0h) Total Reinforcing required for axial force, in-plane and out of plane bending ρ_v = 0.0054 = $\rho_{vl}+\rho_{vt} > 2\rho_{vt}$

D/C = ρ_v(reqd) / ρ_v (prov) D/C = 0.50 **Section Adequate** = ρ_{vl}(req'd) / ρ_v(prov)

4.0 Boundary Elements:

h_w / l_w = 3.41 Concrete Strain limited to .002 No Need To Check for Boundary Elements

5.0 Out-of-Plane Shear:

Nominal Shear Strength Provided by The Concrete Vc=2*(f'c)$^{1/2}$*b*d Vc = 73.0 kips/ft width of wall

Check Demand / Capacity Ratio: D/C = 0.27 No Shear Reinforcement Required
D/C = (out-of-plane shear Vz) / (0.85*Vc)

6.0 Tabulate Reinforcement Requirements And D/C Ratios:

Use 4 ft thick wall with 1-#11@12"c/c EF Horizontal Reinforcement
1-#11@6"c/c EF Vertical Reinforcement.

For Shear on Gross Section: D/C = 0.32
For In-Plane Shear: D/C = 0.39
For Out-of-Plane Shear: D/C = 0.27
Bending + axial Loads D/C = 0.50

Boundary Elements D/C= BOUNDARY ELEMENTS NOT REQUIRED

6.5 CONCRETE STRUCTURE DESIGN, COLUMNS 3.6 TO 8

6.5.1

Roof Slab Design Loads, Column Lines 3.6-5
Roof Slab EL 28'-1"
Accidental torsion factor= 15% (See assumption 3.1.4)

Section cut design forces and moments, which follow a global axis system, for the roof slab at EL 28'-1" from column line 3.6 and 5 include inplane forces and moments: such as axial forces (tension/compression), in plane moment, and in plane shear. The section cut values are integrated along the section cut length, thus for INTSCUT7a the length is equal to 40' and for INTSCUT7b the length is equal to 13.5'. Out of plane values such as out of plane bending and out of plane shear are attained by shell element forces and moments from SAP2000, which follow a local axis system. The out of plane bending moments provided are M11 and M22, and a third moment M12, which is a twisting moment that is combined with M22 and M11. The out of plane shear forces from the shell elements include V13 and V23.

Follow notation below to convert from SAP2000 labeling (i.e F2, M22...) to appropriate design forces and moments.

INTSCUT7a
F1 = Axial Force, Compression (+) / Tension (-)
F2 = In Plane Shear
F3 = Out of Plane Shear
M3 = In Plane Moment

INTSCUT7b
F1 = In Plane Shear
F2 = Axial Force, Compression (+) / Tension (-)
F3 = Out of Plane Shear
M3 = In Plane Moment

Shell Element Forces and Moments
M11 = Out of Plane Moment
M22 = Out of Plane Moment
M12 = Twisting Moment
V13 = Out of Plane Shear
V23 = Out of Plane Shear

	DL+LL						Seismic (SRSS)					
Section Cu	F1	F2	F3	M1	M2	M3	F1	F2	F3	M1	M2	M3
	Kip	Kip	Kip	Kip-ft	Kip-ft	Kip-ft	Kip	Kip	Kip	Kip-ft	Kip-ft	Kip-ft
NTSCUT7a	-31	-39	214	-	-	51	114	266	111	-	-	1349
NTSCUT7b	34	44	66	-	-	-233	253	239	64	-	-	1560

Element Forces - Area Shells D+L						Element Forces - Area Shells SRSS					
MAX	M11	M22	M12	V13	V23	MAX	M11	M22	M12	V13	V23
MIN	Kip-ft/ft	Kip-ft/ft	Kip-ft/ft	Kip/ft	Kip/ft		Kip-ft/ft	Kip-ft/ft	Kip-ft/ft	Kip/ft	Kip/ft
MAX	5	19	16	8	9	MAX	75	108	61	42	37
MIN	-37	-34	-14	-8	-6						

Loads with accidental torsion factor

	DL+LL						Seismic (SRSS)					
Section Cu	F1	F2	F3	M1	M2	M3	F1	F2	F3	M1	M2	M3
	Kip	Kip	Kip	Kip-ft	Kip-ft	Kip-ft	Kip	Kip	Kip	Kip-ft	Kip-ft	Kip-ft
NTSCUT7a	-36	-45	246	-	-	58	132	306	128	-	-	1551
NTSCUT7b	39	51	76	-	-	-268	291	275	73	-	-	1794

Element Forces - Area Shells D+L						Element Forces - Area Shells SRSS					
MAX	M11	M22	M12	V13	V23	MAX	M11	M22	M12	V13	V23
MIN	Kip-ft/ft	Kip-ft/ft	Kip-ft/ft	Kip/ft	Kip/ft		Kip-ft/ft	Kip-ft/ft	Kip-ft/ft	Kip/ft	Kip/ft
MAX	6	22	18	9	11	MAX	86	124	70	48	43
MIN	-42	-39	-16	-9	-7						

Maximum Load Combination

	DL+LL+Seismic (SRSS)						DL+LL-Seismic (SRSS)					
Section Cu	F1	F2	F3	M1	M2	M3	F1	F2	F3	M1	M2	M3
	Kip	Kip	Kip	Kip-ft	Kip-ft	Kip-ft	Kip	Kip	Kip	Kip-ft	Kip-ft	Kip-ft
NTSCUT7a	96	261	374	-	-	1610	-168	-350	118	-	-	-1493
NTSCUT7b	330	326	149	-	-	1527	-252	-224	2	-	-	-2062

DL+LL+Seismic (SRSS)						DL+LL-Seismic (SRSS)					
MAX	M11	M22	M12	V13	V23	MAX	M11	M22	M12	V13	V23
MIN	Kip-ft/ft	Kip-ft/ft	Kip-ft/ft	Kip/ft	Kip/ft	MIN	Kip-ft/ft	Kip-ft/ft	Kip-ft/ft	Kip/ft	Kip/ft
MAX	92	146	88	58	54	MAX	-80	-102	-52	-39	-32
MIN	44	85	53	40	36	MIN	-128	-163	-86	-57	-50

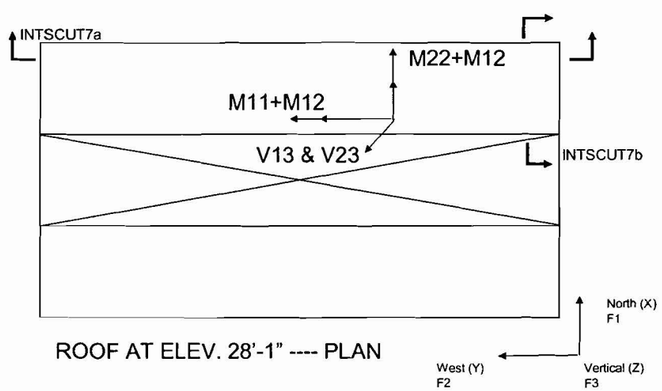

ROOF AT ELEV. 28'-1" ---- PLAN

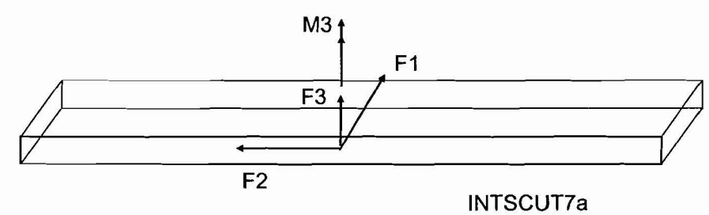

INTSCUT7a

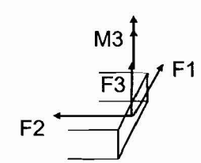

INTSCUT7b