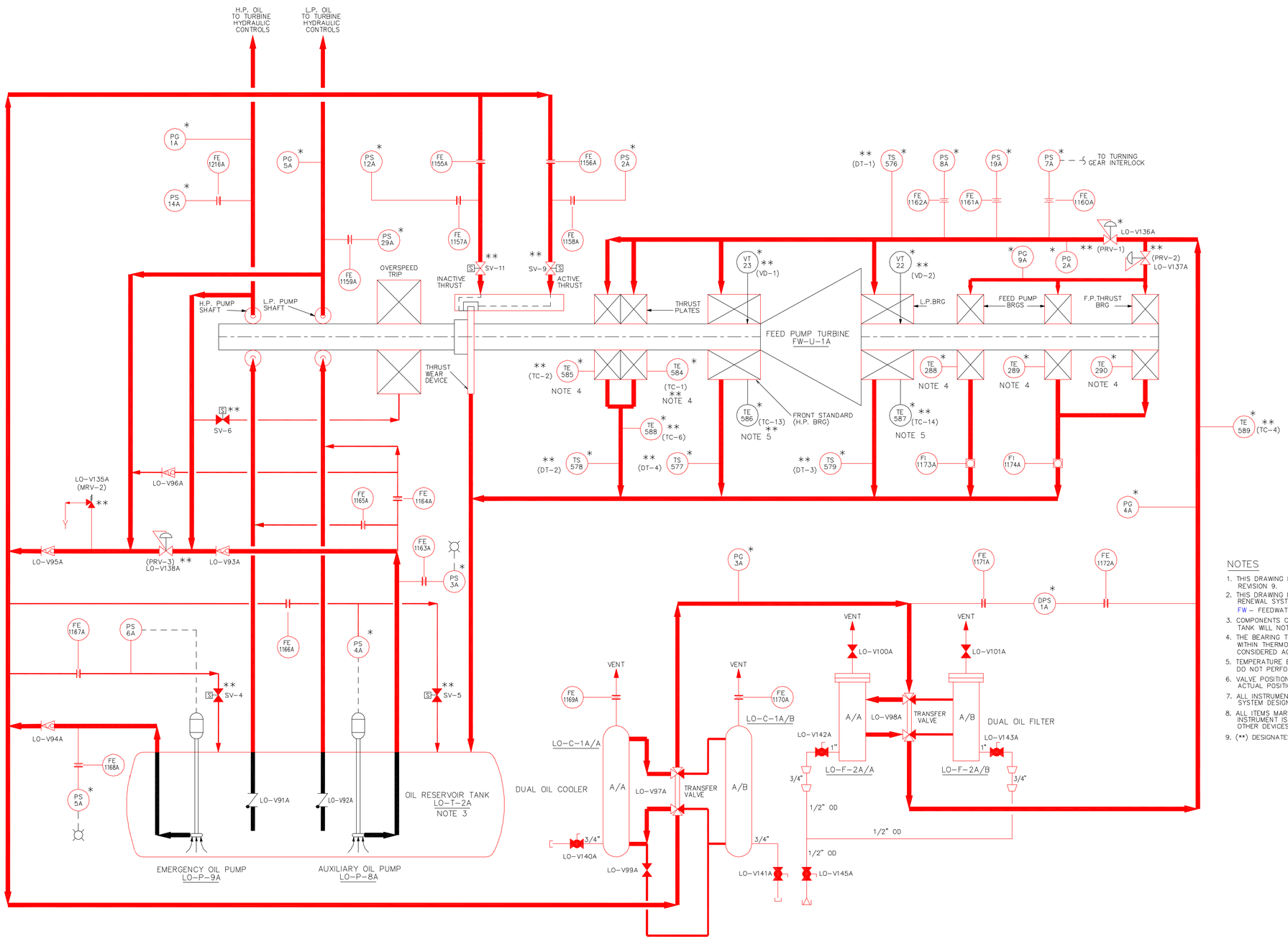

NOTES

1. THIS DRAWING IS BASED ON DRAWING 302-280 SHEET 1 REVISION 9.
2. THIS DRAWING INCLUDES THE FOLLOWING LICENSE RENEWAL SYSTEMS:
   FW – FEEDWATER SYSTEM
3. COMPONENTS CONTAINED WITHIN THE OIL RESERVOIR TANK WILL NOT CREATE SPATIAL INTERACTIONS.
4. THE BEARING TEMPERATURE ELEMENTS ARE NOT CONTAINED WITHIN THERMOWELLS. THESE COMPONENTS ARE CONSIDERED ACTIVE AND ARE NOT SUBJECT TO AMR.
5. TEMPERATURE ELEMENTS SENSE METAL TEMPERATURE AND DO NOT PERFORM A LEAKAGE BOUNDARY INTENDED FUNCTION.
6. VALVE POSITIONS SHOWN FOR REFERENCE ONLY. ACTUAL POSITIONS CONTROLLED BY PROCEDURES.
7. ALL INSTRUMENT TAG NUMBERS ARE PREFIXED BY SYSTEM DESIGNATOR UNLESS OTHERWISE NOTED.
8. ALL ITEMS MARKED WITH AN (*) DENOTE THE INSTRUMENT IS DESIGNATED IN THE CREL AS "FW" SYSTEM. OTHER DEVICES ARE DESIGNATED AS "LO" SYSTEM.
9. (**) DESIGNATES GE ASSIGNED NUMBERS.

TABLE OF ADDITIONS & CHANGES

NO	DATE	DESCRIPTION	REV'D	CHK'D	APP'D
0	01 03 08	INITIAL ISSUE FOR LICENSE RENEWAL	TW	MAM	DPC

MECHANICAL

LICENSE RENEWAL DRAWING
DRIVE TURBINE LUBE OIL
FEED PUMP TURBINE "A"
FLOW DIAGRAM

THREE MILE ISLAND
AmerGen

SHEET 1 OF 2 | LR-302-280 | REV 0

DWG NO. LR-302-280 SH. 1

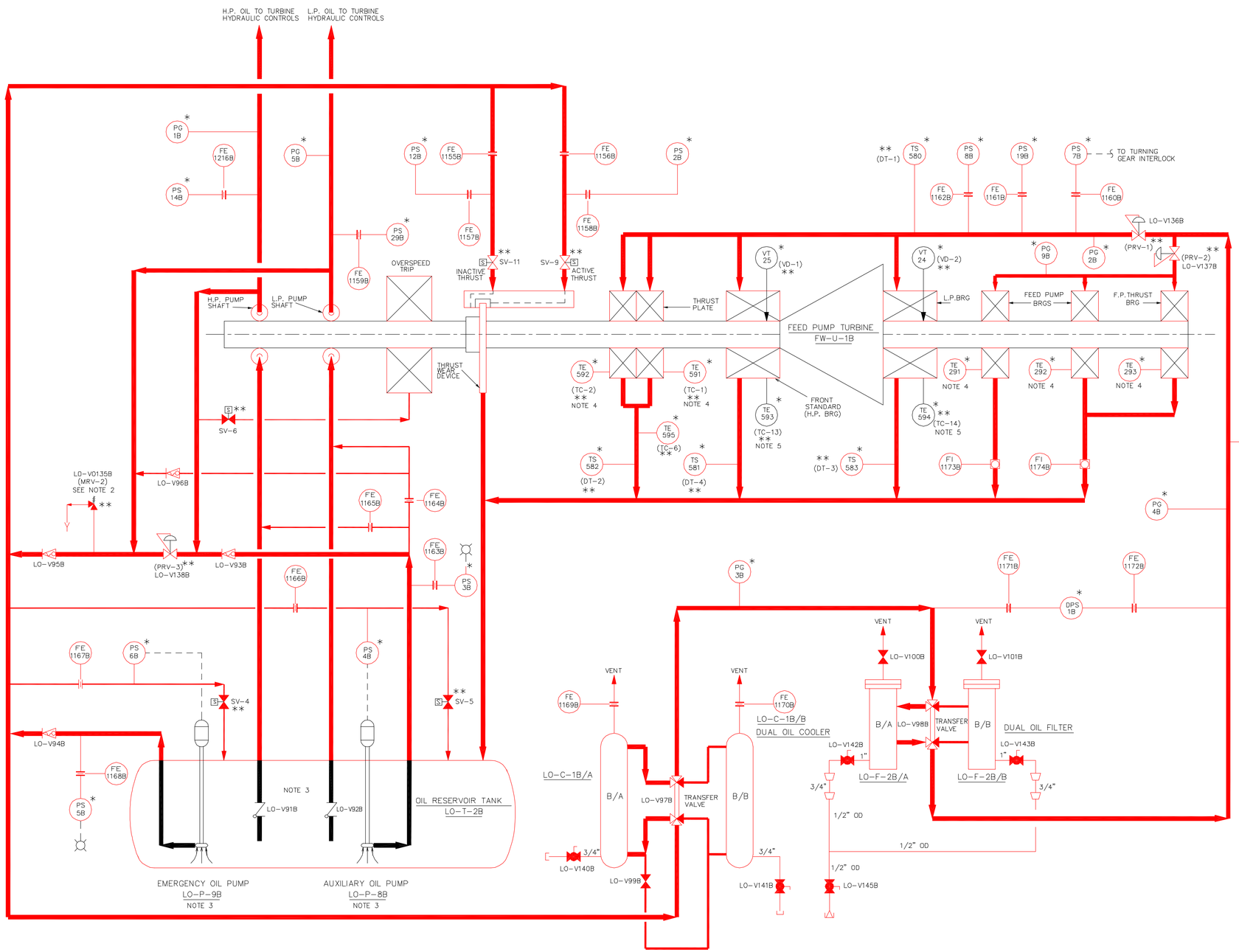

NOTES

1. THIS DRAWING IS BASED ON DRAWING 302-280 SHEET 2 REVISION 7.
2. THIS DRAWING INCLUDES THE FOLLOWING LICENSE RENEWAL SYSTEMS:
   FW-FEEDWATER SYSTEM
3. COMPONENTS CONTAINED WITHIN THE OIL RESERVOIR TANK WILL NOT CREATE SPATIAL INTERACTIONS.
4. THE BEARING TEMPERATURE ELEMENTS ARE NOT CONTAINED WITHIN THERMOWELLS. THESE COMPONENTS ARE CONSIDERED ACTIVE AND NOT SUBJECT TO AMR.
5. TEMPERATURE ELEMENTS SENSE METAL TEMPERATURE AND DO NOT PERFORM A LEAKAGE BOUNDARY INTENDED FUNCTION.
6. ALL ITEMS MARKED WITH AN (*) DENOTE THE ITEM IS DESIGNATED IN THE CREL AS "FW" SYSTEM. OTHER DEVICES ARE DESIGNATED AS "LO" SYSTEM.
7. VALVE POSITIONS SHOWN FOR REFERENCE ONLY. ACTUAL POSITIONS CONTROLLED BY PROCEDURES.
8. ALL INSTRUMENT TAG NUMBERS ARE PREFIXED BY SYSTEM DESIGNATOR UNLESS OTHERWISE NOTED.
9. (**) DESIGNATES GE ASSIGNED NUMBERS.

TABLE OF ADDITIONS & CHANGES

NO	DATE	DESCRIPTION	REV'D	CHK'D	APP'D
0	01 03 08	INITIAL ISSUE FOR LICENSE RENEWAL	TW	MAM	DPC

MECHANICAL

LICENSE RENEWAL DRAWING
DRIVE TURBINE LUBE OIL
FEED PUMP TURBINE "B"
FLOW DIAGRAM

THREE MILE ISLAND
AmerGen

SHEET 2 OF 2 | LR-302-280 | REV 0

DWG NO. LR-302-280 SH. 2

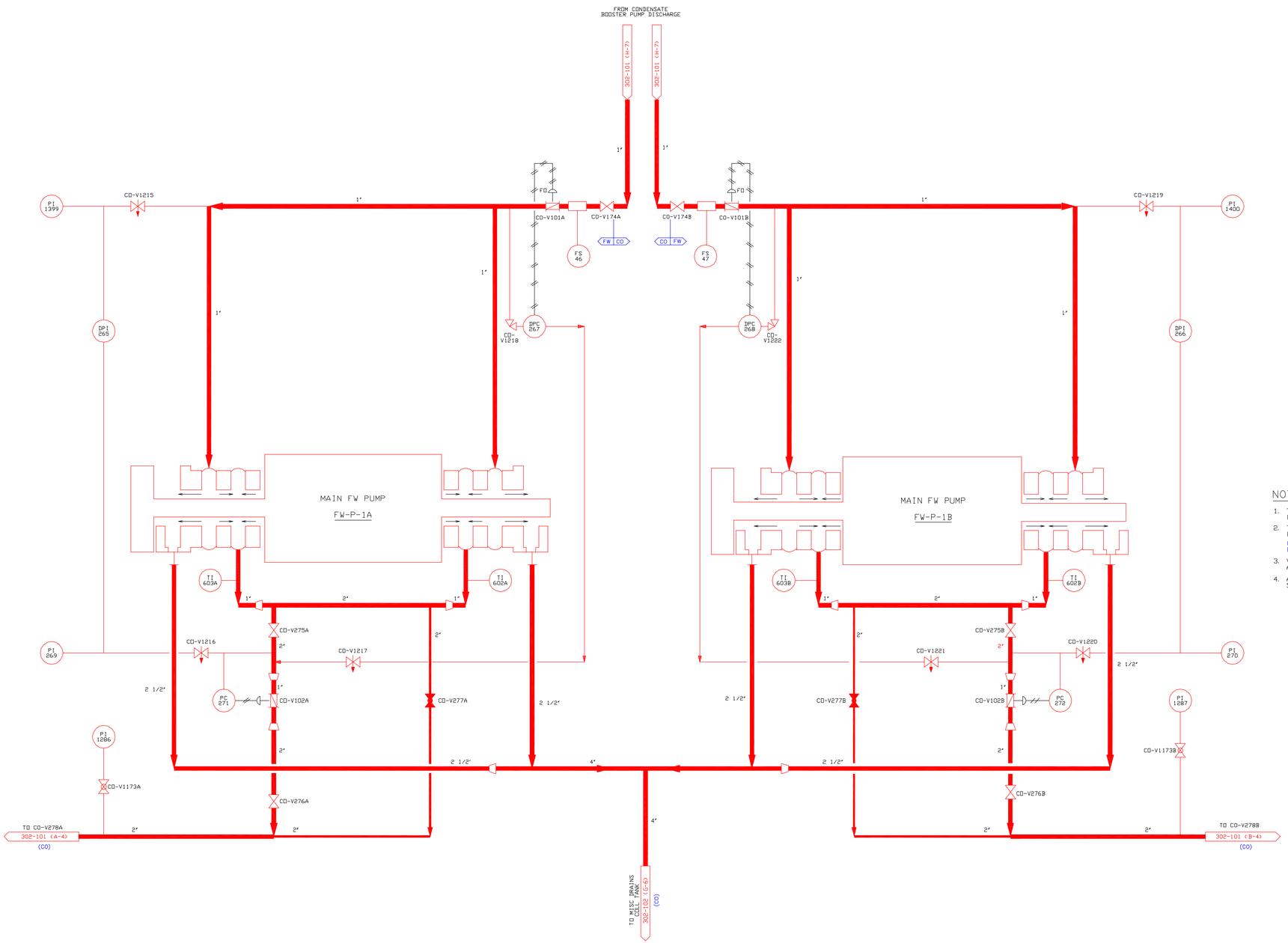

NOTES

1. THIS DRAWING IS BASED ON DRAWING 302-281 REVISION 23.
2. THIS DRAWING INCLUDES THE FOLLOWING LICENSE RENEWAL SYSTEMS:
   CO - CONDENSATE SYSTEM
   FW - FEEDWATER SYSTEM
3. VALVE POSITIONS SHOWN FOR REFERENCE ONLY. ACTUAL POSITIONS CONTROLLED BY PROCEDURES.
4. ALL INSTRUMENT TAG NUMBERS ARE PREFIXED BY SYSTEM DESIGNATOR UNLESS OTHERWISE NOTED.

TABLE OF ADDITIONS & CHANGES

NO	DATE	DESCRIPTION	REV'D	CHK'D	APP'D
0	01 03 08	INITIAL ISSUE FOR LICENSE RENEWAL	T W	D P C	M A M

MECHANICAL

LICENSE RENEWAL DRAWING
FEED PUMP SHAFT SEALS & LEAKOFF FLOW DIAGRAM

THREE MILE ISLAND
AmerGen

SHEET 1 OF 1 | LR-302-281 | REV 0

DWG.NO. LR-302-281 SH. 1

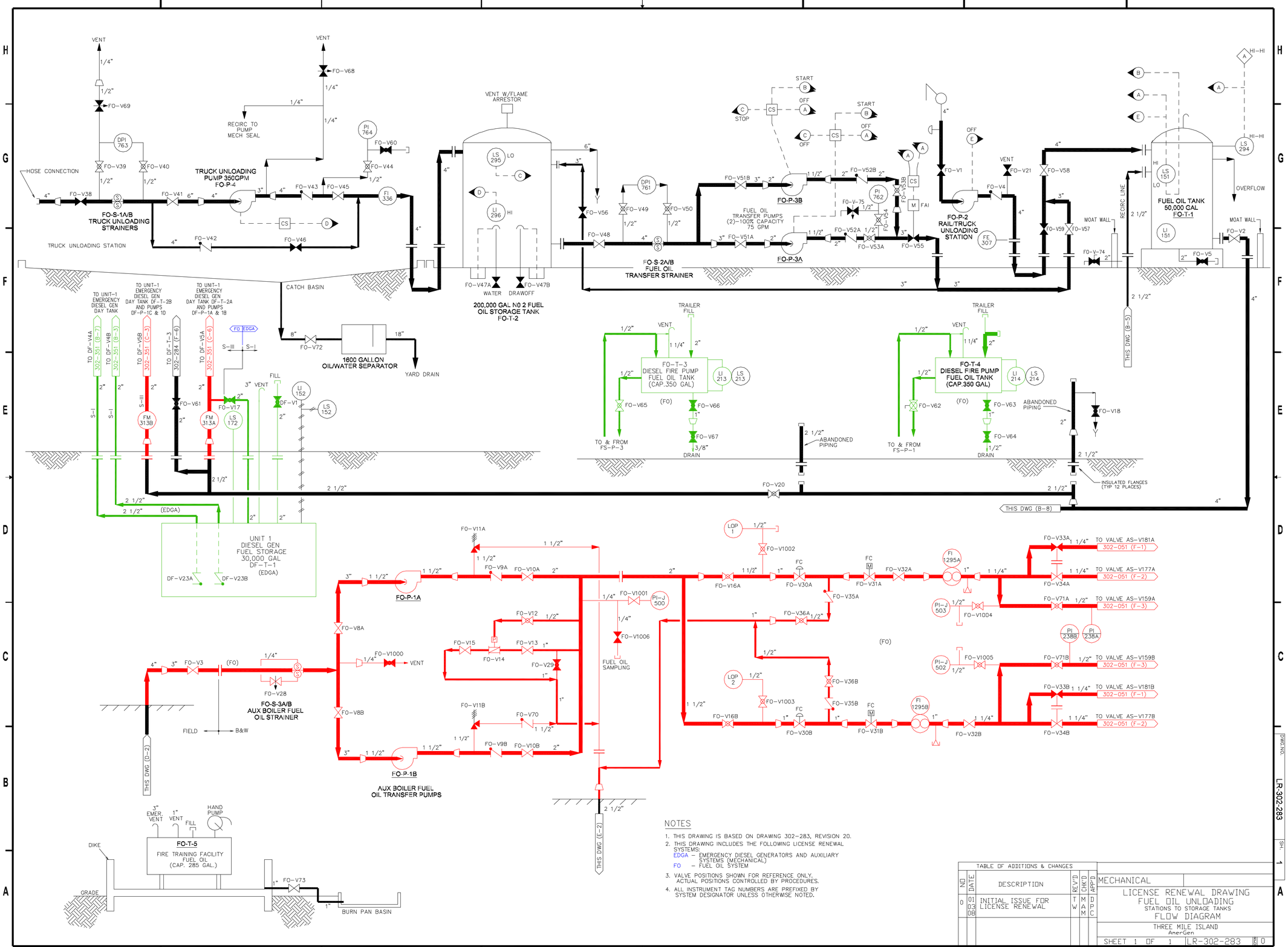

NOTES

1. THIS DRAWING IS BASED ON DRAWING 302-283, REVISION 20.
2. THIS DRAWING INCLUDES THE FOLLOWING LICENSE RENEWAL SYSTEMS:
   EDGA – EMERGENCY DIESEL GENERATORS AND AUXILIARY SYSTEMS (MECHANICAL)
   FO – FUEL OIL SYSTEM
3. VALVE POSITIONS SHOWN FOR REFERENCE ONLY. ACTUAL POSITIONS CONTROLLED BY PROCEDURES.
4. ALL INSTRUMENT TAG NUMBERS ARE PREFIXED BY SYSTEM DESIGNATOR UNLESS OTHERWISE NOTED.

TABLE OF ADDITIONS & CHANGES

NO	DATE	DESCRIPTION	REV'D	CHK'D	APP'D
0	01 03 08	INITIAL ISSUE FOR LICENSE RENEWAL	TW	MAM	DPC

MECHANICAL

LICENSE RENEWAL DRAWING
FUEL OIL UNLOADING
STATIONS TO STORAGE TANKS
FLOW DIAGRAM

THREE MILE ISLAND
AmerGen

SHEET 1 OF 1 | LR-302-283 | REV 0

DWG. NO. LR-302-283 SH. 1

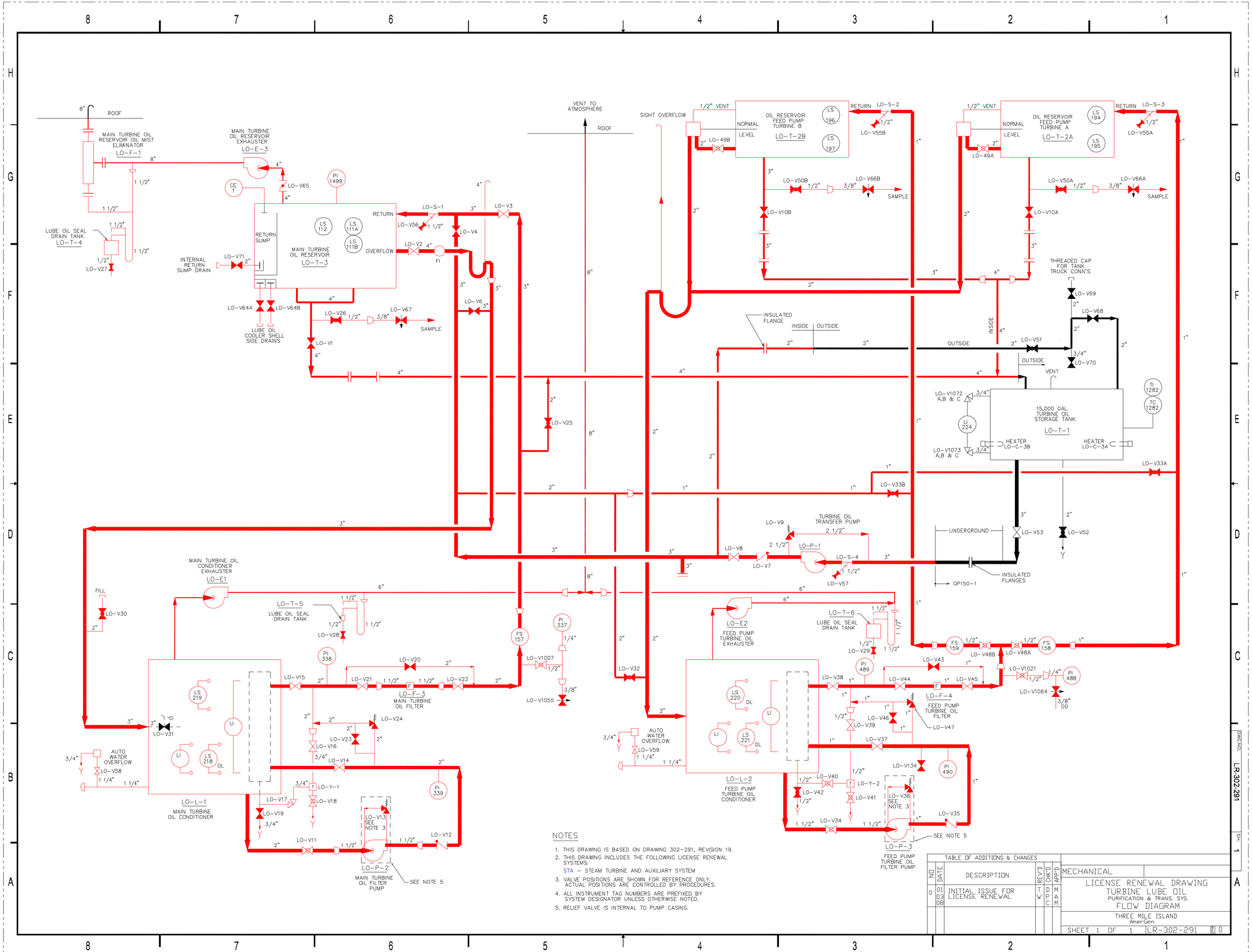

NOTES

1. THIS DRAWING IS BASED ON DRAWING 302-291, REVISION 19.
2. THIS DRAWING INCLUDES THE FOLLOWING LICENSE RENEWAL SYSTEMS:
   STA – STEAM TURBINE AND AUXILIARY SYSTEM
3. VALVE POSITIONS ARE SHOWN FOR REFERENCE ONLY. ACTUAL POSITIONS ARE CONTROLLED BY PROCEDURES.
4. ALL INSTRUMENT TAG NUMBERS ARE PREFIXED BY SYSTEM DESIGNATOR UNLESS OTHERWISE NOTED.
5. RELIEF VALVE IS INTERNAL TO PUMP CASING.

TABLE OF ADDITIONS & CHANGES

NO	DATE	DESCRIPTION	REV'D	CHK'D	APP'D
0	01 03 08	INITIAL ISSUE FOR LICENSE RENEWAL	T W	D P C	M A M

MECHANICAL

LICENSE RENEWAL DRAWING
TURBINE LUBE OIL
PURIFICATION & TRANS. SYS.
FLOW DIAGRAM

THREE MILE ISLAND
AmerGen

SHEET 1 OF 1 LR-302-291 REV 0

DWG.NO. LR-302-291 SH. 1

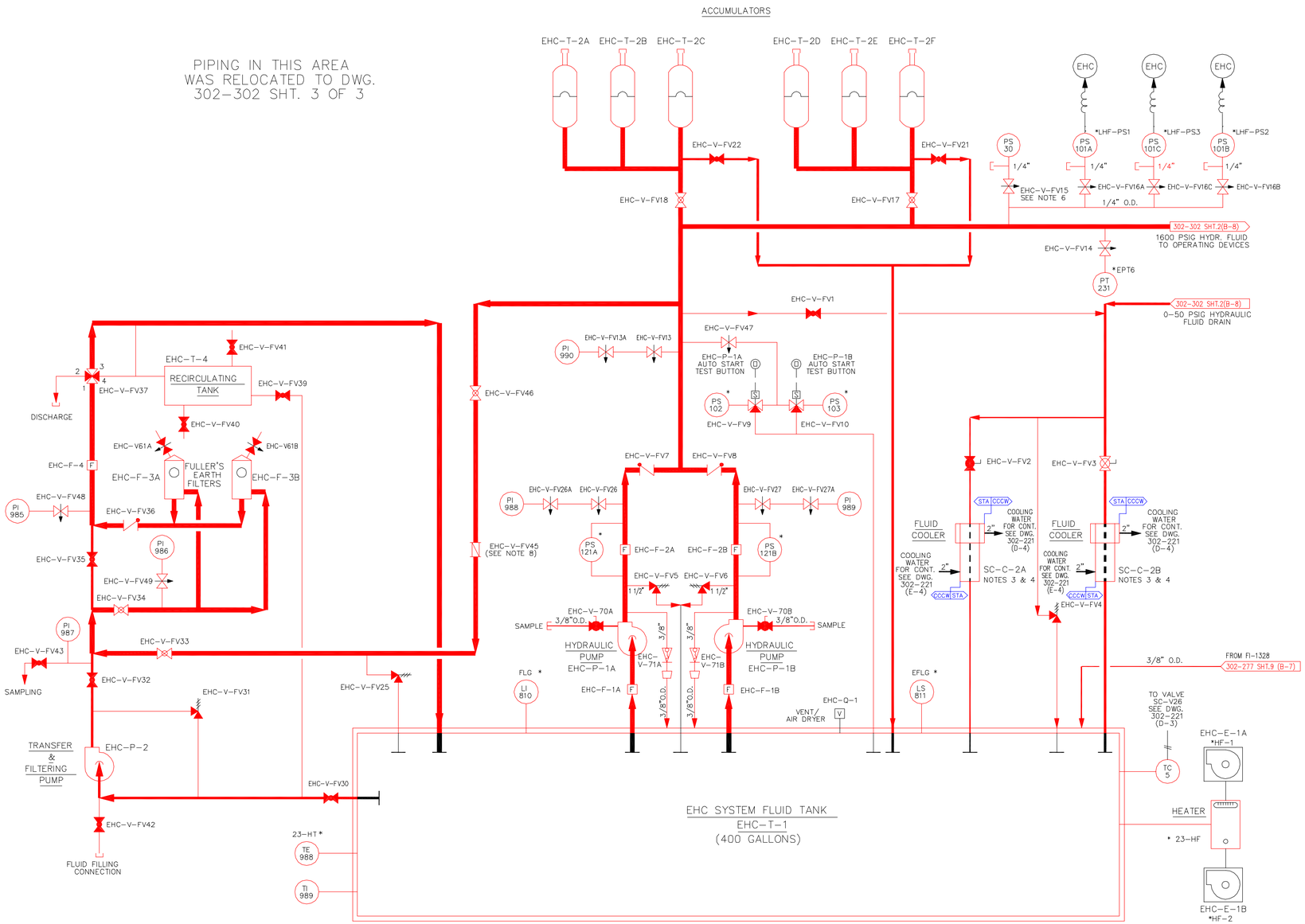

NOTES

1. THIS DRAWING IS BASED ON DRAWING 302-302, SHEET 1, REVISION 14.
2. THIS DRAWING INCLUDES THE FOLLOWING LICENSE RENEWAL SYSTEMS:
   CCCW – CLOSED CYCLE COOLING WATER SYSTEM
   STA – STEAM TURBINE AND AUXILIARY SYSTEM
3. COOLING WATER IS PROVIDED TO THE FLUID COOLERS VIA THE CLOSED CYCLE COOLING WATER SYSTEM.
4. THE FLUID COOLERS, SC-C-2A AND SC-C-2B, ARE IN SCOPE FOR SPATIAL INTERACTION ONLY. THE SHELL SIDE OF THESE COOLERS ARE EVALUATED FOR AGING MANAGEMENT WITH THE STEAM TURBINE & AUXILIARY SYSTEM. THE TUBE SIDE OF THESE COOLERS ARE EVALUATED FOR WITH THE CLOSED CYCLE COOLING WATER SYTEM. THE TUBE SIDE COMPONENTS ARE ENCLOSED BY THE CONDENSER SHELL AND WILL NOT CREATE SPATIAL INTERACTIONS.
5. VALVE POSITIONS SHOWN FOR REFERENCE ONLY. ACTUAL POSITIONS CONTROLLED BY PROCEDURES.
6. ALL INSTRUMENT TAG NUMBERS ARE PREFIXED BY SYSTEM DESIGNATOR UNLESS OTHERWISE NOTED.
7. SEE G.E. DWG. 233R957 FOR HYDRAULIC FLOW ARRANGEMENT AT EACH MAIN TURBINE VALVE OPERATOR.
8. EHC-V-FV45 FLOW CONTROL VALVE SUPPLIES FLUID FLOW TO FILTERS ONLY WHEN MAIN PUMPS ARE RUNNING. EHC-P-2 MUST BE USED FOR FILTER FLOW IF MAIN PUMPS ARE SHUT DOWN.
9. (*)INDICATES G.E.ASSIGNED INSTRUMENT OR EQUIPMENT NUMBERS.
10. A. VALVE NUMBERS DESIGNATED EHC-V-FV00 ARE G.E. ASSIGNED NUMBERS.
11. B. VALVE NUMBERS ASSIGNED BY OTHER THAN G.E. TO BE DESIGNATED EHC-V00.

TABLE OF ADDITIONS & CHANGES

NO	DATE	DESCRIPTION	REV'D	CHK'D	APP'D
0	01 03 08	INITIAL ISSUE FOR LICENSE RENEWAL	TW	DPC	MAM

MECHANICAL

LICENSE RENEWAL DRAWING
TURBINE EHC SYSTEM

FLOW DIAGRAM

THREE MILE ISLAND
AmerGen

SHEET 1 OF 2 LR-302-302 REV 0

DWG.NO. LR-302-302 SH. 1 OF 3

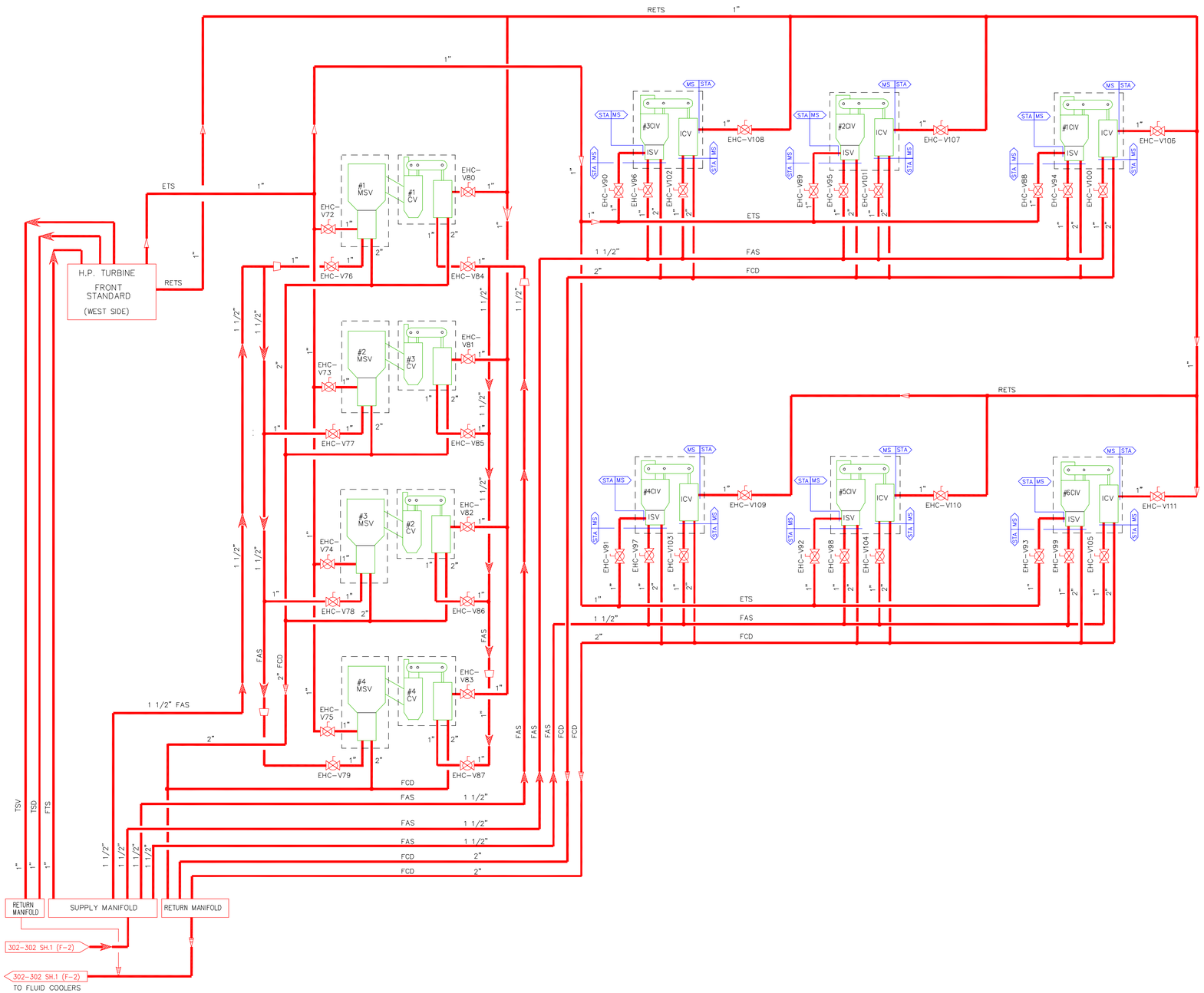

LEGEND:

- OIL OR HYDRAULIC FLUID LINE
- ELECTRICAL CONNECTION
- ELECTRICAL (DUAL OR MULTIPLE LEAD)
- STEAM LINE
- 225 PSIG MAIN PUMP DISCH.OIL
- 25 PSIG BEARING HEADER OIL
- 1600 PSIG HYDRAULIC FLUID TO OPERATING DEVICES (FAS)
- 1600 PSIG INTERNAL HYDRAULIC FLUID TO JETS OF SERVO FROM FAS
- 1600-0 PSIG HYDRAULIC FLUID TRIP SYSTEM.(ETS)
- 0-50 PSIG HYDRAULIC FLUID DRAIN (FCD)
- 1600-0 PSIG RELAYED HYDRAULIC FLUID TRIP SYSTEM (RETS)
- OPERATING SIGNAL FROM ELECTRO-HYDRAULIC CONTROL CABINET. (EHC)
- FEEDBACK SIGNAL TO ELECTRO-HYDRAULIC CONTROL CABINET. (EHC)

NOTES:

1. THIS DRAWING IS BASED ON DRAWING 302-302, SHEET 2, REVISION 4.
2. THIS DRAWING INCLUDES THE FOLLOWING LICENSE RENEWAL SYSTEMS:
   MS - MAIN STEAM SYSTEM
   STA - STEAM TURBINE & AUXILIARY SYSTEM
3. REFERENCE G.E. DWG. #233R957 REV. 12

TABLE OF ADDITIONS & CHANGES

NO	DATE	DESCRIPTION	REV'D	CHK'D	APP'D
0	01 03 08	INITIAL ISSUE FOR LICENSE RENEWAL	TW	DPC	MAM

MECHANICAL

LICENSE RENEWAL DRAWING
TURBINE EHC SYSTEM

FLOW DIAGRAM

THREE MILE ISLAND
AmerGen

SHEET 2 OF 2 | LR-302-302 | REV 0

DWG.NO. LR-302-302 | SH. 2 OF 3

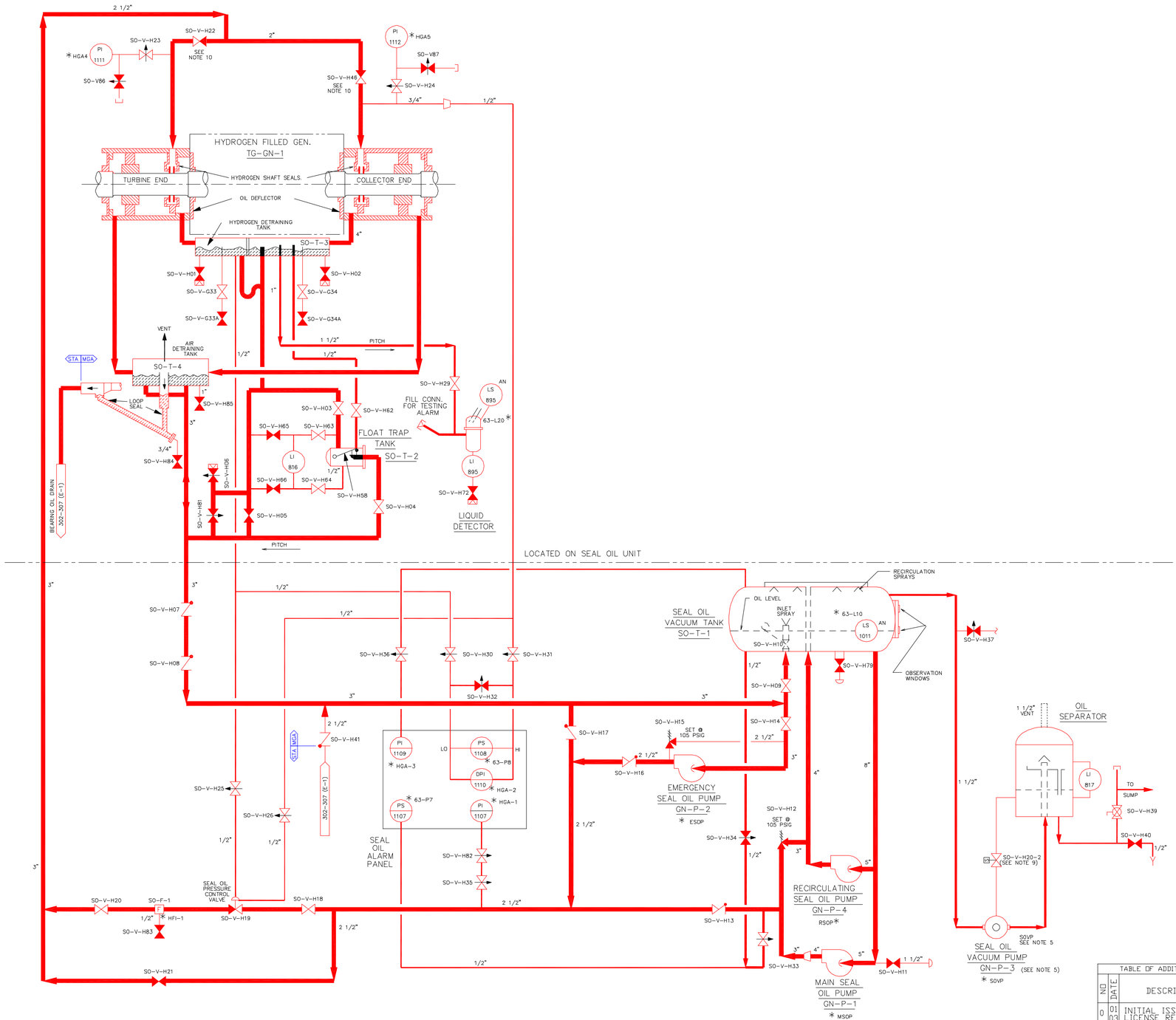

NOTES

1. THIS DRAWING IS BASED ON DRAWNING 302-303 REVISION 5.
2. THIS DRAWING INCLUDES THE FOLLOWING LICENSE RENEWAL SYSTEMS:
   MGA – MAIN GENERATOR AND AUXILLARY SYSTEM
   STA – STEAM TURBINE AND AUXILLARY SYSTEM
3. VALVE POSITIONS SHOWN FOR REFERENCE ONLY. ACTUAL POSITIONS CONTROLLED BY PROCEDURES.
4. ALL INSTRUMENT TAG NUMBERS ARE PREFIXED BY SYSTEM DESIGNATOR UNLESS OTHERWISE NOTED.
5. SEE G.E. DWG. 949D100 FOR INSTRUMENT SET POINTS AND OPERATING INSTRUCTIONS.
6. VACUUM PUMP (GN-P-3) CASING TO BE BE DRAINED PRIOR TO STARTING.
7. * INDICATES G.E. ASSIGNED INSTRUMENT OR EQUIPMENT NUMBERS.
8. A. VALVE NUMBERS DESIGNATED SO-V-H00 ARE G.E. ASSIGNED NUMBERS.
   B. VALVE NUMBERS ASSIGNED BY OTHER THAN G.E. TO BE DESIGNATED SO-V-00.
9. SO-V-H20-2 OPENS TO PROVIDE LUBE OIL WHEN MOTOR ENERGIZED.
10. SO-V-H22,46 DISCS ARE DRILLED TO PREVENT TIGHT SHUT OFF AND STARVING SEALS.

TABLE OF ADDITIONS & CHANGES

NO	DATE	DESCRIPTION	REV'D	CHK'D	APP'D
0	01 03 08	INITIAL ISSUE FOR LICENSE RENEWAL	T W	M A M	D P C

MECHANICAL

LICENSE RENEWAL DRAWING
SHAFT SEALING SYSTEM
FLOW DIAGRAM

THREE MILE ISLAND
AmerGen

SHEET 1 OF 1 LR-302-303 REV 0

DWG.NO. LR-302-303 SH. 1

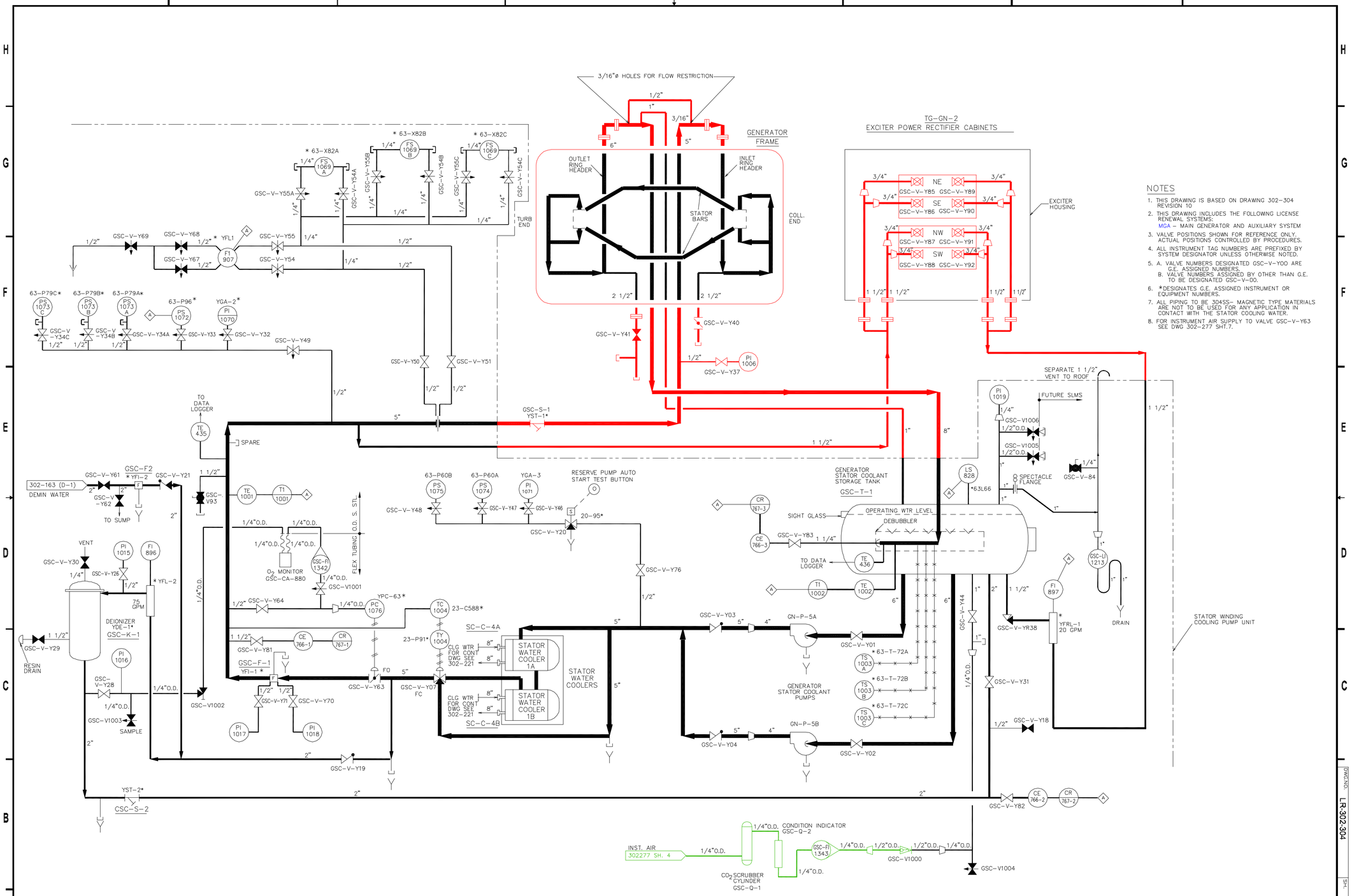

NOTES

1. THIS DRAWING IS BASED ON DRAWING 302-304 REVISION 10
2. THIS DRAWING INCLUDES THE FOLLOWING LICENSE RENEWAL SYSTEMS:
   MGA – MAIN GENERATOR AND AUXILIARY SYSTEM
3. VALVE POSITIONS SHOWN FOR REFERENCE ONLY. ACTUAL POSITIONS CONTROLLED BY PROCEDURES.
4. ALL INSTRUMENT TAG NUMBERS ARE PREFIXED BY SYSTEM DESIGNATOR UNLESS OTHERWISE NOTED.
5. A. VALVE NUMBERS DESIGNATED GSC-V-Y00 ARE G.E. ASSIGNED NUMBERS.
   B. VALVE NUMBERS ASSIGNED BY OTHER THAN G.E. TO BE DESIGNATED GSC-V-D0.
6. *DESIGNATES G.E. ASSIGNED INSTRUMENT OR EQUIPMENT NUMBERS.
7. ALL PIPING TO BE 304SS– MAGNETIC TYPE MATERIALS ARE NOT TO BE USED FOR ANY APPLICATION IN CONTACT WITH THE STATOR COOLING WATER.
8. FOR INSTRUMENT AIR SUPPLY TO VALVE GSC-V-Y63 SEE DWG 302-277 SHT.7.

TABLE OF ADDITIONS & CHANGES

NO	DATE	DESCRIPTION	REV'D	CHK'D	APP'D
0	01 03 08	INITIAL ISSUE FOR LICENSE RENEWAL	T W	M A M	D P C

MECHANICAL

LICENSE RENEWAL DRAWING
GEN STATOR COOLANT
FLOW DIAGRAM

THREE MILE ISLAND
AmerGen

SHEET 1 OF 1 LR-302-304 REV 0

DWG.NO. LR-302-304 SH. 1

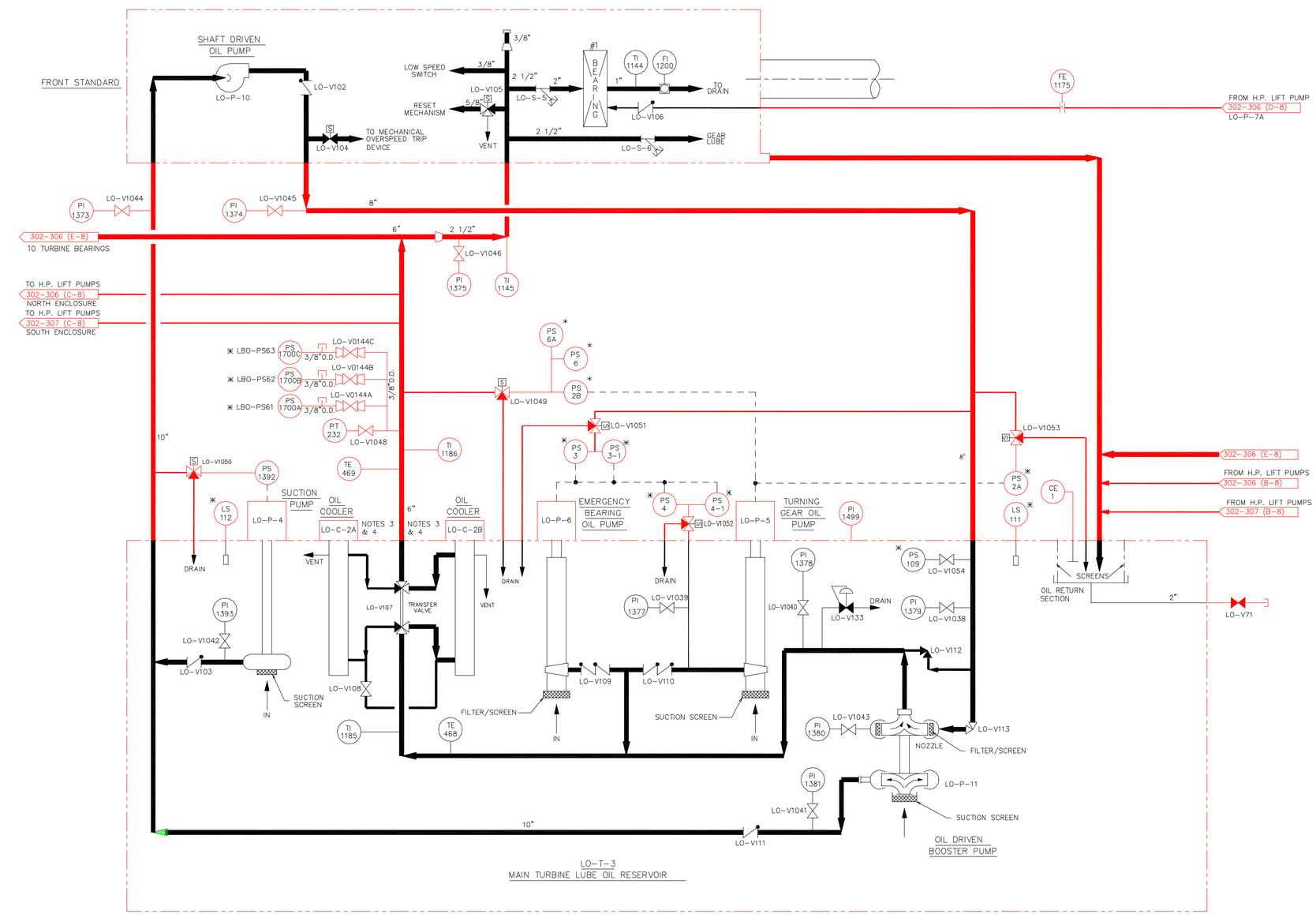

NOTES

1. THIS DRAWING IS BASED ON DRAWING 302-305, REVISION 6.
2. THIS DRAWING INCLUDES THE FOLLOWING LICENSE RENEWAL SYSTEMS:
   CCCW – CLOSED COOLING WATER SYSTEM
   STA – STEAM TURBINE AND AUXILIARY SYSTEM
3. COOLING WATER IS PROVIDED TO THE LUBE OIL COOLERS, LO-C-2A, LO-C-2B, VIA THE CLOSED CYCLE COOLING WATER SYSTEM.
4. THE LUBE OIL COOLER SHELL SIDE COMPONENTS ARE EVALUATED WITH THE STEAM TURBINE AND AUXILIARY SYSTEM. THE LUBE OIL COOLER TUBE SIDE COMPONENTS ARE EVALUATED WITH THE CLOSED COOLING WATER SYSTEM. THE TUBES ARE ENCLOSED BY THE SHELL AND ARE NOT IN SCOPE FOR SPATIAL INTERACTION.
5. COMPONENTS LABELED WITH (*) AND ASSOCIATED PIPING ARE LOCATED WITHIN A CARBON STEEL ENCLOSURE AND ARE NOT IN-SCOPE FOR LICENSE RENEWAL FOR SPATIAL INTERACTION.
6. SEE DRAWING LR-302-291 FOR ADDITIONAL CONNECTIONS TO LO-T-3.
7. VALVE POSITIONS SHOWN FOR REFERENCE ONLY. ACTUAL POSITIONS CONTROLLED BY PROCEDURES.
8. ALL INSTRUMENT TAG NUMBERS ARE PREFIXED BY SYSTEM DESIGNATOR UNLESS OTHERWISE NOTED.

TABLE OF ADDITIONS & CHANGES

NO	DATE	DESCRIPTION	REV'D	CHK'D	APP'D
0	01 03 00	INITIAL ISSUE FOR LICENSE RENEWAL	T W	D P C	M A M

MECHANICAL

LICENSE RENEWAL DRAWING
GENERATOR LUBE OIL SYSTEM
MAIN TURBINE
FLOW DIAGRAM

THREE MILE ISLAND
AmerGen

SHEET 1 OF 1 | LR-302-305 | REV 0

DWG.NO. LR-302-305 SH. 1

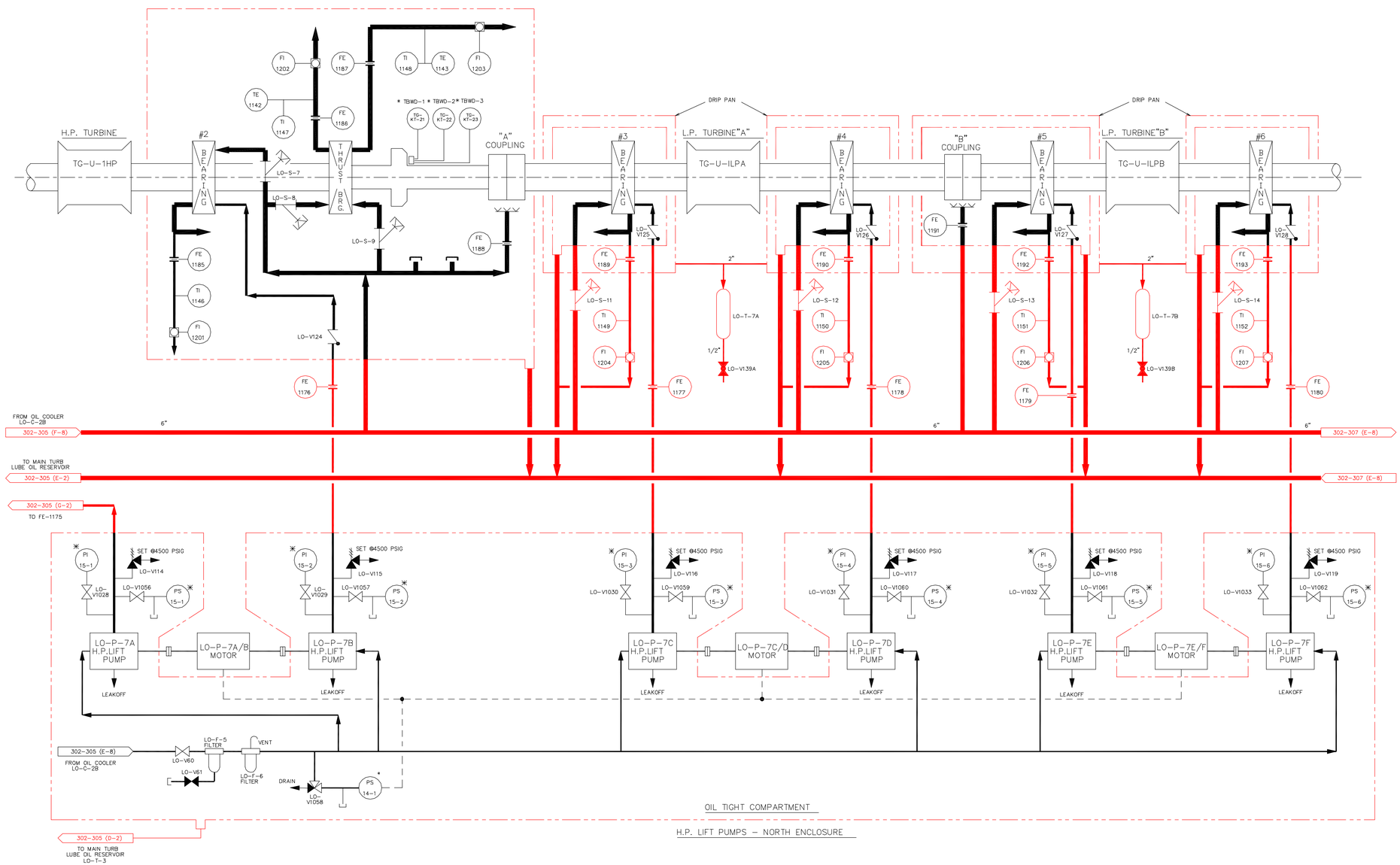

NOTES

1. THIS DRAWING IS BASED ON DRAWING 302-306, REVISION 6.
2. THIS DRAWING INCLUDES THE FOLLOWING LICENSE RENEWAL SYSTEMS:
   STA – STEAM TURBINE AND AUXILIARY SYSTEM
3. VALVE POSITIONS SHOWN FOR REFERENCE ONLY. ACTUAL POSITIONS CONTROLLED BY PROCEDURES.
4. ALL INSTRUMENT TAG NUMBERS ARE PREFIFED BY SYSTEM DESIGNATOR UNLESS OTHERWISE NOTED.

TABLE OF ADDITIONS & CHANGES

NO	DATE	DESCRIPTION	REV'D	CHK'D	APP'D
0	01 03 08	INITIAL ISSUE FOR LICENSE RENEWAL	T W	D P C	M A M

MECHANICAL

LICENSE RENEWAL DRAWING
GENERATOR LUBE OIL SYSTEM
MAIN TURBINE
FLOW DIAGRAM

THREE MILE ISLAND
AmerGen

SHEET 1 OF 1 | LR-302-306 | REV 0

DWG.NO. LR-302-306 SH. 1

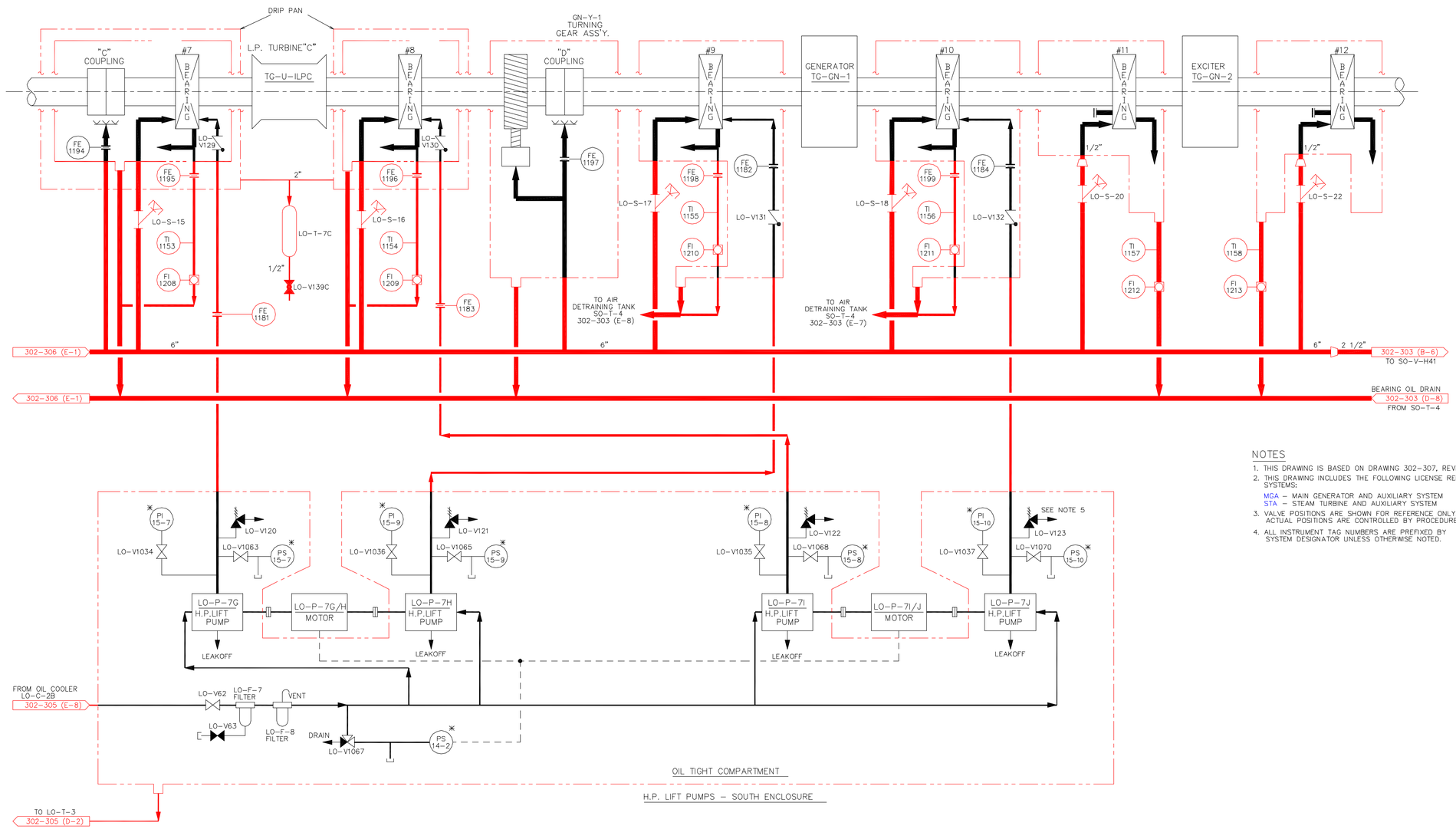

NOTES

1. THIS DRAWING IS BASED ON DRAWING 302-307, REVISION 8.
2. THIS DRAWING INCLUDES THE FOLLOWING LICENSE RENEWAL SYSTEMS:
   MGA – MAIN GENERATOR AND AUXILIARY SYSTEM
   STA – STEAM TURBINE AND AUXILIARY SYSTEM
3. VALVE POSITIONS ARE SHOWN FOR REFERENCE ONLY. ACTUAL POSITIONS ARE CONTROLLED BY PROCEDURES.
4. ALL INSTRUMENT TAG NUMBERS ARE PREFIXED BY SYSTEM DESIGNATOR UNLESS OTHERWISE NOTED.

TABLE OF ADDITIONS & CHANGES

NO	DATE	DESCRIPTION	REV'D	CHK'D	APP'D
0	01 03 08	INITIAL ISSUE FOR LICENSE RENEWAL	A B	D P C	M A M

MECHANICAL

LICENSE RENEWAL DRAWING
GENERATOR LUBE OIL SYSTEM
MAIN TURBINE
FLOW DIAGRAM

THREE MILE ISLAND
AmerGen

SHEET 1 OF 1 | LR-302-307 | REV 0

DWG.NO. LR-302-307 SH. 1

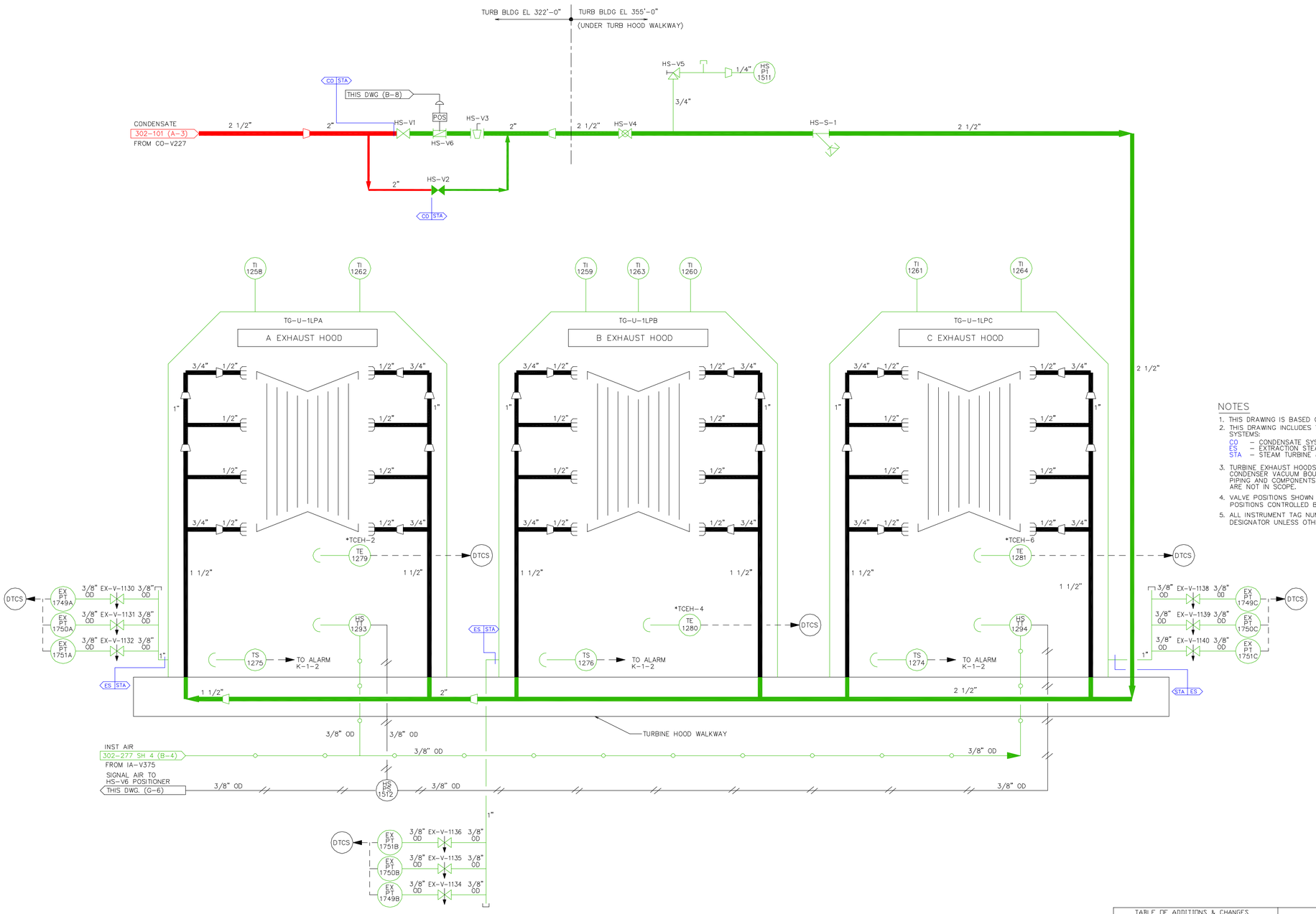

NOTES

1. THIS DRAWING IS BASED ON DRAWING 302-308, REVISION 7.
2. THIS DRAWING INCLUDES THE FOLLOWING LICENSE RENEWAL SYSTEMS:
   - CO – CONDENSATE SYSTEM
   - ES – EXTRACTION STEAM
   - STA – STEAM TURBINE & AUXILIARY SYSTEM
3. TURBINE EXHAUST HOODS A,B,C FUNCTION AS MAIN CONDENSER VACUUM BOUNDARY, THEREFORE HOOD SPRAY PIPING AND COMPONENTS ENCLOSED BY EXHAUST HOODS ARE NOT IN SCOPE.
4. VALVE POSITIONS SHOWN FOR REFERENCE ONLY. ACTUAL POSITIONS CONTROLLED BY PROCEDURES.
5. ALL INSTRUMENT TAG NUMBERS ARE PREFIXED BY SYSTEM DESIGNATOR UNLESS OTHERWISE NOTED.

TABLE OF ADDITIONS & CHANGES

NO	DATE	DESCRIPTION	REV'D	CHK'D	APP'D
0	01 03 08	INITIAL ISSUE FOR LICENSE RENEWAL	A B	D P C	M A M

MECHANICAL

LICENSE RENEWAL DRAWING
EXHAUST HOOD SPRAY SYS.
MAIN TURBINE
FLOW DIAGRAM

THREE MILE ISLAND
AmerGen

SHEET 1 OF 1 | LR-302-308 | REV 0

DWG.NO. LR-302-308 SH. 1

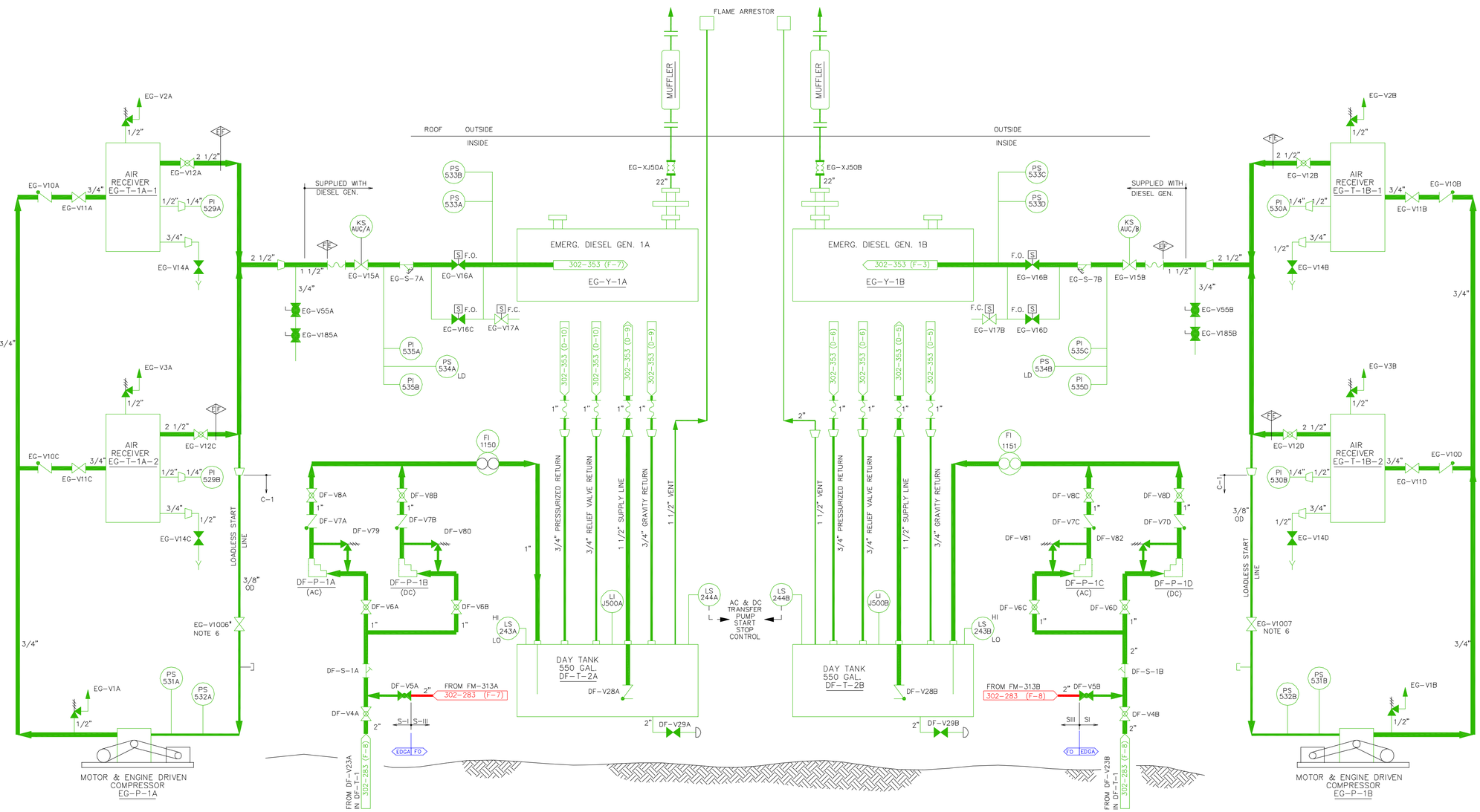

NOTES

1. THIS DRAWING IS BASED ON DRAWING 302-351, REVISION 18.
2. THIS DRAWING INCLUDES THE FOLLOWING LICENSE RENEWAL SYSTEMS:
   EDGA – EMERGENCY DIESEL GENERATOR & AUXILIARY SYSTEMS (MECHANICAL)
   FO – FUEL OIL SYSTEM
3. VALVE POSITIONS SHOWN FOR REFERENCE ONLY. ACTUAL POSITIONS CONTROLLED BY PROCEDURES.
4. ALL INSTRUMENT TAG NUMBERS ARE PREFIXED BY SYSTEM DESIGNATOR UNLESS OTHERWISE NOTED.
5. LINE SPEC: ABOVE GROUND 150-1
   UNDERGROUND 150-3
   EMBEDDED IN CONCRETE 150-1
6. VALVES: EG-V1006 & EG-V1007 ARE EQUIPPED WITH COLLARS THAT PREVENT CLOSING.

TABLE OF ADDITIONS & CHANGES

NO	DATE	DESCRIPTION	REV'D	CHK'D	APP'D
0	01 03 08	INITIAL ISSUE FOR LICENSE RENEWAL	A B	J M C	D P C

MECHANICAL

LICENSE RENEWAL DRAWING
EMERGENCY DIESEL
GENERATOR SERVICES
FLOW DIAGRAM

THREE MILE ISLAND
AmerGen

SHEET 1 OF 1 | LR-302-351 | REV 0

DWG NO LR-302-351 SH 1

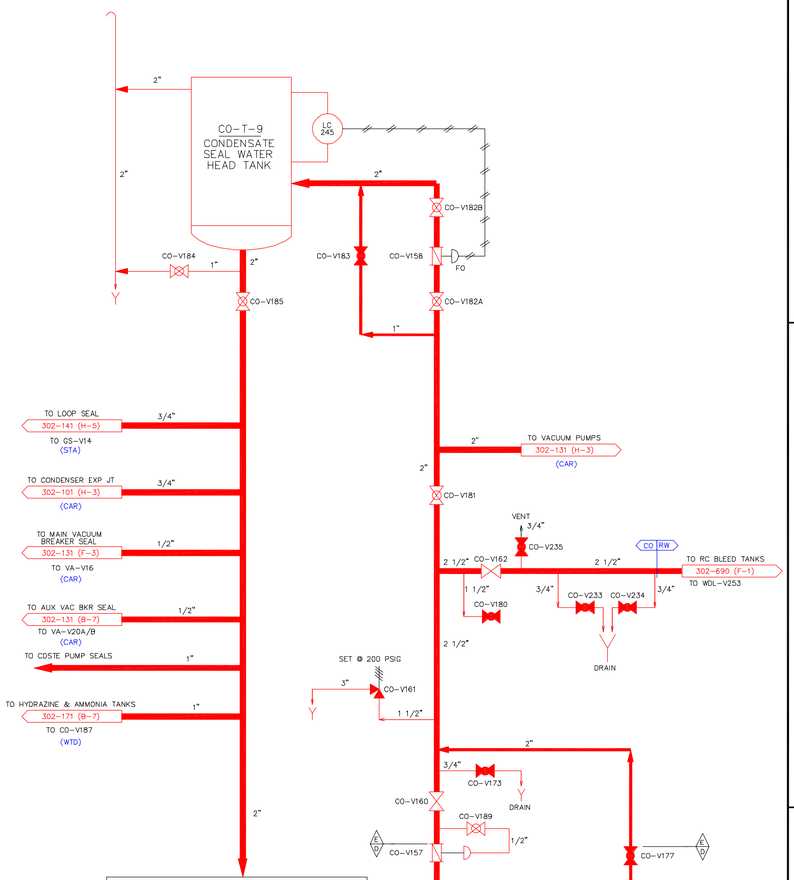

VALVE SEALS

MS-V12A	HV-V3A
MS-V12B	HV-V3B
MS-V12C	HV-V2A
MS-V12C	HV-V2B
MS-V12E	HV-V1A
MS-V12E	HV-V1B
MS-V12F	HV-V1O
FW-V11A	EX-V15
FW-V11B	EX-V15B
FW-V8	CO-V112A
CO-V106A	CO-V112B
CO-V106B	CO-V112C
DW-V1	HV-V8A
CO-V109	HV-V8B
CO-V107	HV-V7A
CO-V34	HV-V7B
HD-V27A	
HD-V27B	

SEALING WATER SYSTEM
NOTE 6

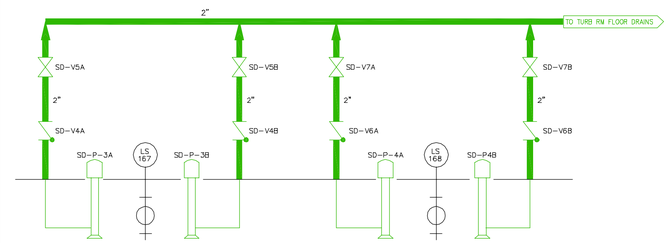

INTERMEDIATE BUILDING
SUMP PUMPS
(MFED)

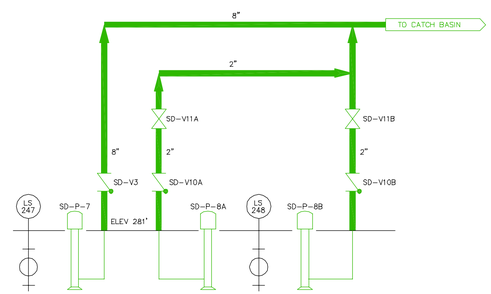

AIR TUNNEL SUMP PUMPS
(MFED)

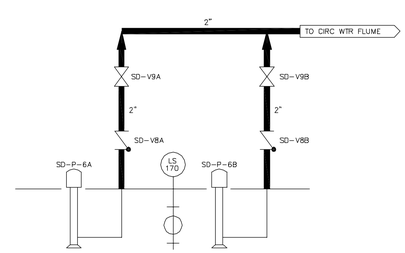

CIRC WATER HOUSE SUMP PUMPS
(MFED)

NOTES

1. THIS DRAWING IS BASED ON DRAWING 302-352 REVISION 19.
2. THIS DRAWING INCLUDES TH FOLLOWING LICENSE RENEWAL SYSTEMS:

   CO – CONDENSATE SYSTEM
   MFED– MISCELLANEOUS FLOOR AND EQUIPMENT DRAINS SYSTEM
   RW – RADWASTE SYSTEM

3. VALVE POSITIONS SHOWN FOR REFERENCE ONLY. ACTUAL POSITIONS CONTROLLED BY PROCEDURES.
4. ALL INSTRUMENT TAG NUMBERS ARE PREFIXED BY SYSTEM DESIGNATOR UNLESS OTHERWISE NOTED.
5. SEE DRAWING LR-302-165 FOR TURBINE ROOM SUMP PUMPS.
6. SEAL WATER IS PROVIDED TO VALVES IN THE FOLLOWING LICENSE RENEWAL SYSTEMS:
   MAIN STEAM, CONDENSATE AND EXTRACTION STEAM.

TABLE OF ADDITIONS & CHANGES

NO	DATE	DESCRIPTION	REV'D	CHK'D	APP'D
0	01 03 00	INITIAL ISSUE FOR LICENSE RENEWAL	A B	D P C	M A M

MECHANICAL

LICENSE RENEWAL DRAWING
CONDENSATE SEAL WATER
FLOW DIAGRAM
INTERMEDIATE BLDG, AIR TUNNEL
CIRC WATER HSE SUMP PUMPS

THREE MILE ISLAND
AmerGen

SHEET 1 OF 1 LR-302-352 0

DWG.NO LR-302-352 SH. 1

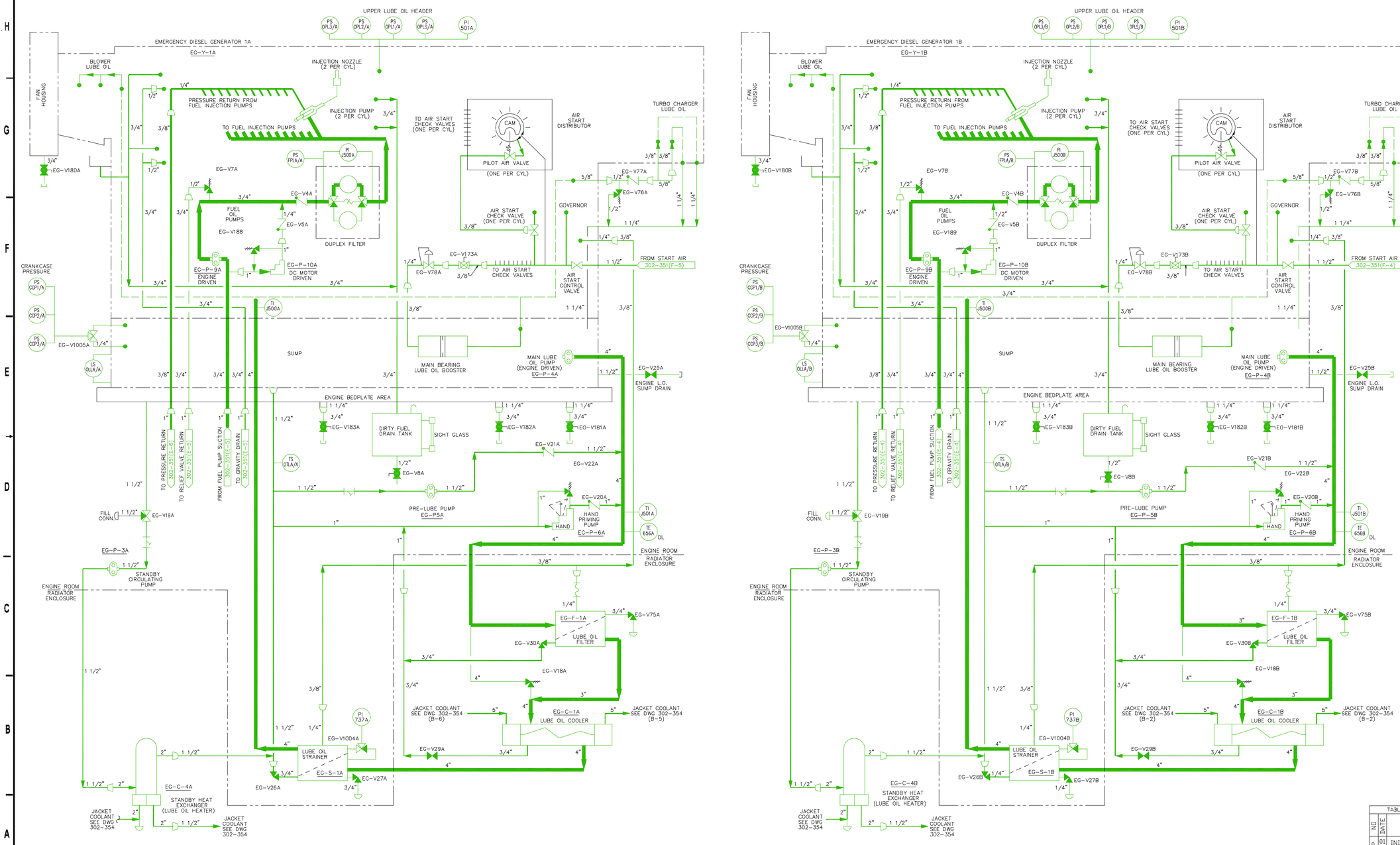

NOTES:

1. THIS DRAWING IS BASED ON DRAWING 302-353, REVISION 11.
2. THIS DRAWING INCLUDES THE FOLLOWING LICENSE RENEWAL SYSTEMS:
   EDGA – EMERGENCY DIESEL GENERATORS AND AUXILIARY SYSTEMS (MECHANICAL)
3. VALVE POSITIONS SHOWN FOR REFERENCE ONLY. ACTUAL POSITIONS CONTROLLED BY PROCEDURES.
4. ALL INSTRUMENT TAG NUMBERS ARE PREFIXED BY SYSTEM DESIGNATOR UNLESS OTHERWISE NOTED.
5. AIR START CONTROL VALVE, PILOT AIR VALVES, AND AIR START CHECK VALVES ARE NOT STANDARD DESIGN VALVES. THEY HAVE SPECIAL CONSTRUCTION AND ARE PART OF THE ENGINE MECHANISMS.

TABLE OF ADDITIONS & CHANGES

NO	DATE	DESCRIPTION	REV'D	CH'D	APP'D
0	01 03 08	INITIAL ISSUE FOR LICENSE RENEWAL	A B	J M C	D P C

MECHANICAL

LICENSE RENEWAL DRAWING
DIESEL GENERATOR SERVICES
LUBE OIL, FUEL OIL, AIR START
FLOW DIAGRAM

THREE MILE ISLAND
AmerGen

SHEET 1 OF 1 | LR-302-353 | REV 0

DWG NO. LR-302-353 | SH. 1

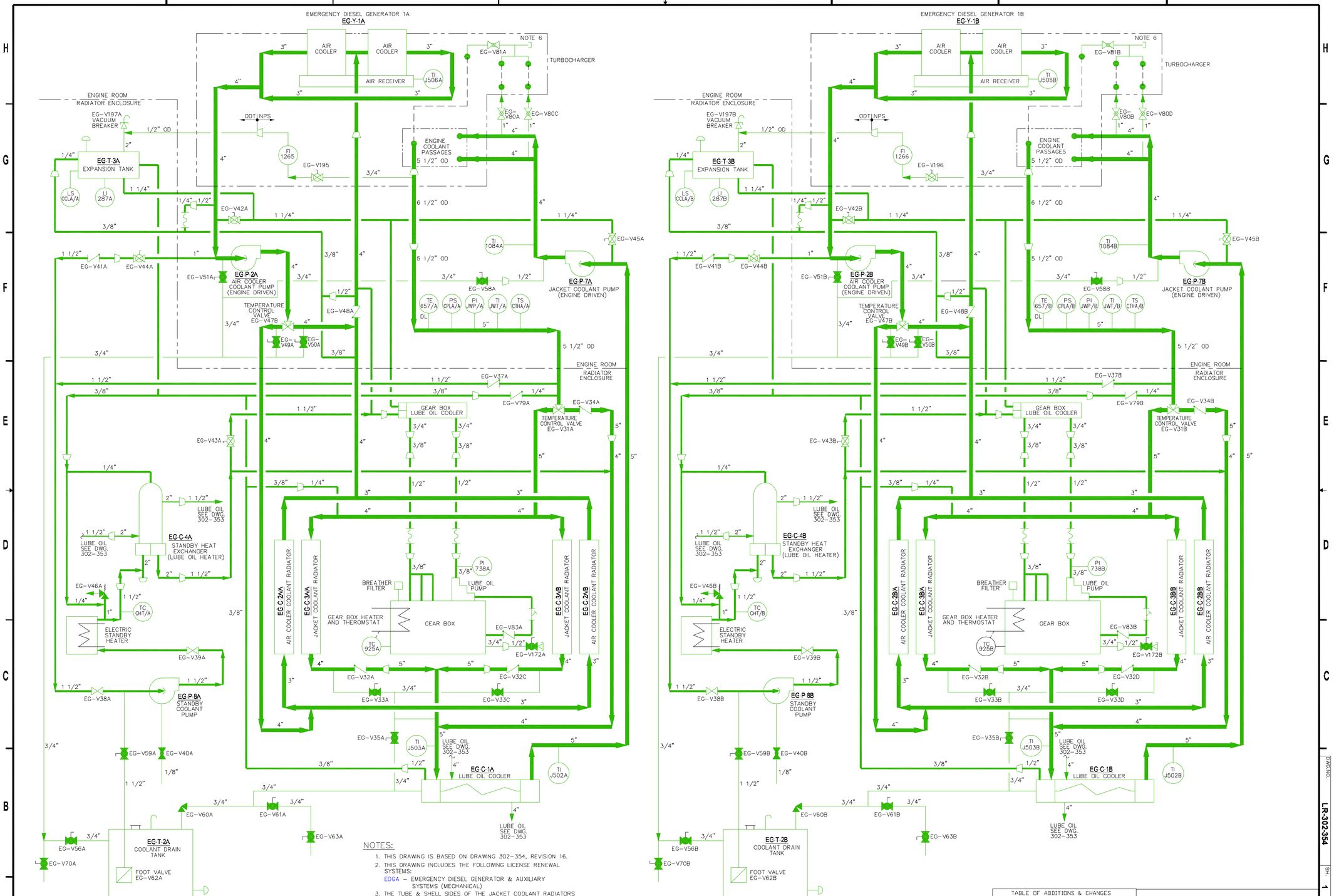

NOTES:

1. THIS DRAWING IS BASED ON DRAWING 302-354, REVISION 16.
2. THIS DRAWING INCLUDES THE FOLLOWING LICENSE RENEWAL SYSTEMS:
   EDGA – EMERGENCY DIESEL GENERATOR & AUXILIARY SYSTEMS (MECHANICAL)
3. THE TUBE & SHELL SIDES OF THE JACKET COOLANT RADIATORS AIR COOLER COOLANT RADIATORS, STANDBY HEAT EXCHANGERS, AND LUBE OIL COOLERS ARE EVALUATED FOR AGING MANAGEMENT WITH THE EDGA SYSTEM.
4. VALVE POSITIONS SHOWN FOR REFERENCE ONLY. ACTUAL POSITIONS CONTROLLED BY PROCEDURES.
5. ALL INSTRUMENT TAG NUMBERS ARE PREFIXED BY SYSTEM DESIGNATOR UNLESS OTHERWISE NOTED.
6. CONNECTIONS FOR HYDRO TEST RELIEFS EG-V82A/B VALVES NORMALLY REMOVED AND CONNECTION BLANKED.

TABLE OF ADDITIONS & CHANGES

NO	DATE	DESCRIPTION	REV'D	CHK'D	APP'D
0	01 03 08	INITIAL ISSUE FOR LICENSE RENEWAL	TW	JMC	DPC

MECHANICAL

LICENSE RENEWAL DRAWING
DIESEL GENERATOR
JACKET AND AIR COOLER
COOLANT SYSTEM, GEAR BOX LUBE OIL SYSTEM
FLOW DIAGRAM

THREE MILE ISLAND
AmerGen

SHEET 1 OF 1 | LR-302-354 | REV 0

DWG. NO. LR-302-354 SH. 1

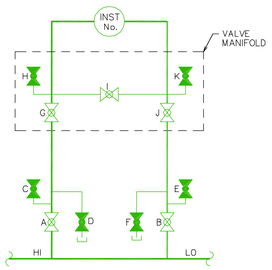

TYP. INSTRUMENT DETAIL "A"

INST. NO.	VALVES										
	A	B	C	D	E	F	G	H	I	J	K
DPIS-1590	V48A	V49A	V1002A	V1004A	V1003A	V1005A	V1001A	V1001D	V1001C	V1001B	V1001E
DPIS-1591	V48B	V49B	V1002B	V1004B	V1003B	V1005B	V1006A	V1006D	V1006C	V1006B	V1006E
DPI-1596	V55A	V56A	V1007A	V1009A	V1008A	V1010A	V1011A	V1011D	V1011C	V1011B	V1011E
DPI-1597	V55B	V56B	V1007B	V1009B	V1008B	V1010B	V1012A	V1012D	V1012C	V1012B	V1012E

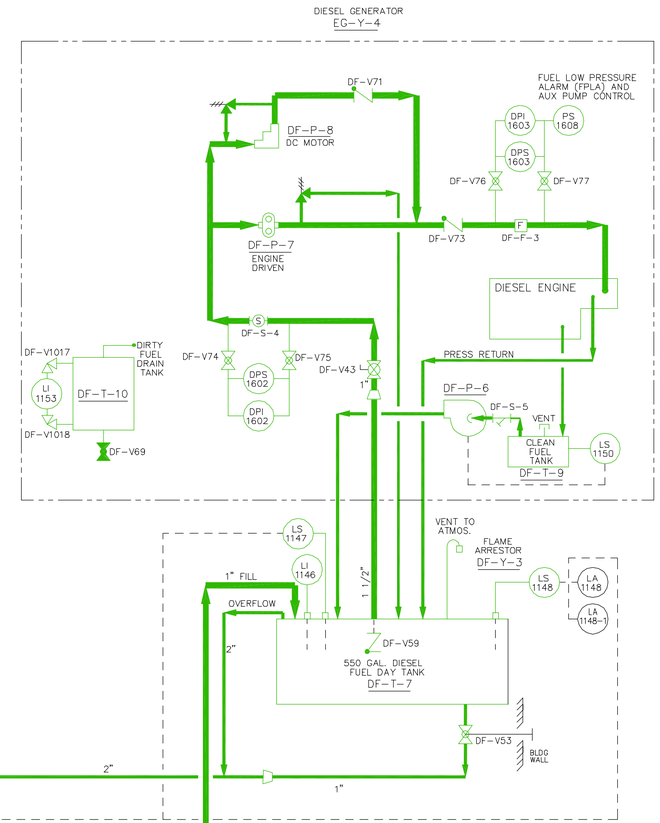

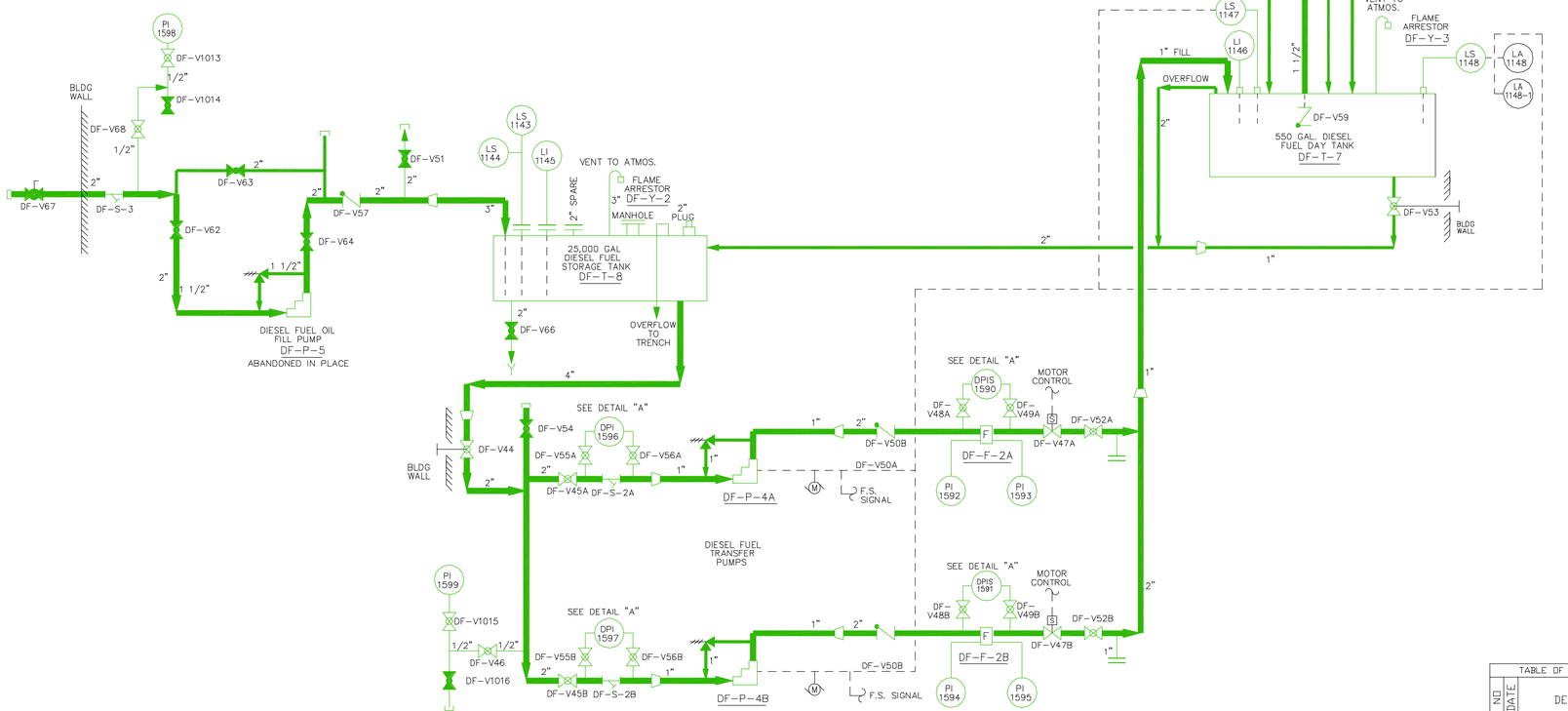

NOTES:

1. THIS DRAWING IS BASED ON DRAWING 302-355, REVISION 7.
2. THIS DRAWING INCLUDES THE FOLLOWING LICENSE RENEWAL SYSTEMS:
   SBO - STATION BLACKOUT AND UPS DIESEL GENERATOR SYSTEMS
3. VALVE POSITIONS SHOWN FOR REFERENCE ONLY. ACTUAL POSITIONS CONTROLLED BY PROCEDURES.
4. ALL INSTRUMENT TAG NUMBERS ARE PREFIXED BY SYSTEM DESIGNATOR UNLESS OTHERWISE NOTED.

TABLE OF ADDITIONS & CHANGES

NO	DATE	DESCRIPTION	REV'D	CHK'D	APP'D
0	01 03 08	INITIAL ISSUE FOR LICENSE RENEWAL	A B	J M C	D P C

MECHANICAL

LICENSE RENEWAL DRAWING
STATION BLACKOUT DIESEL
GENERATOR DIESEL FUEL SYSTEM FOR EG-Y-4
FLOW DIAGRAM

THREE MILE ISLAND
AmerGen

SHEET 1 OF 1 | LR-302-355 | REV 0

DWG NO. LR-302-355 SH. 1

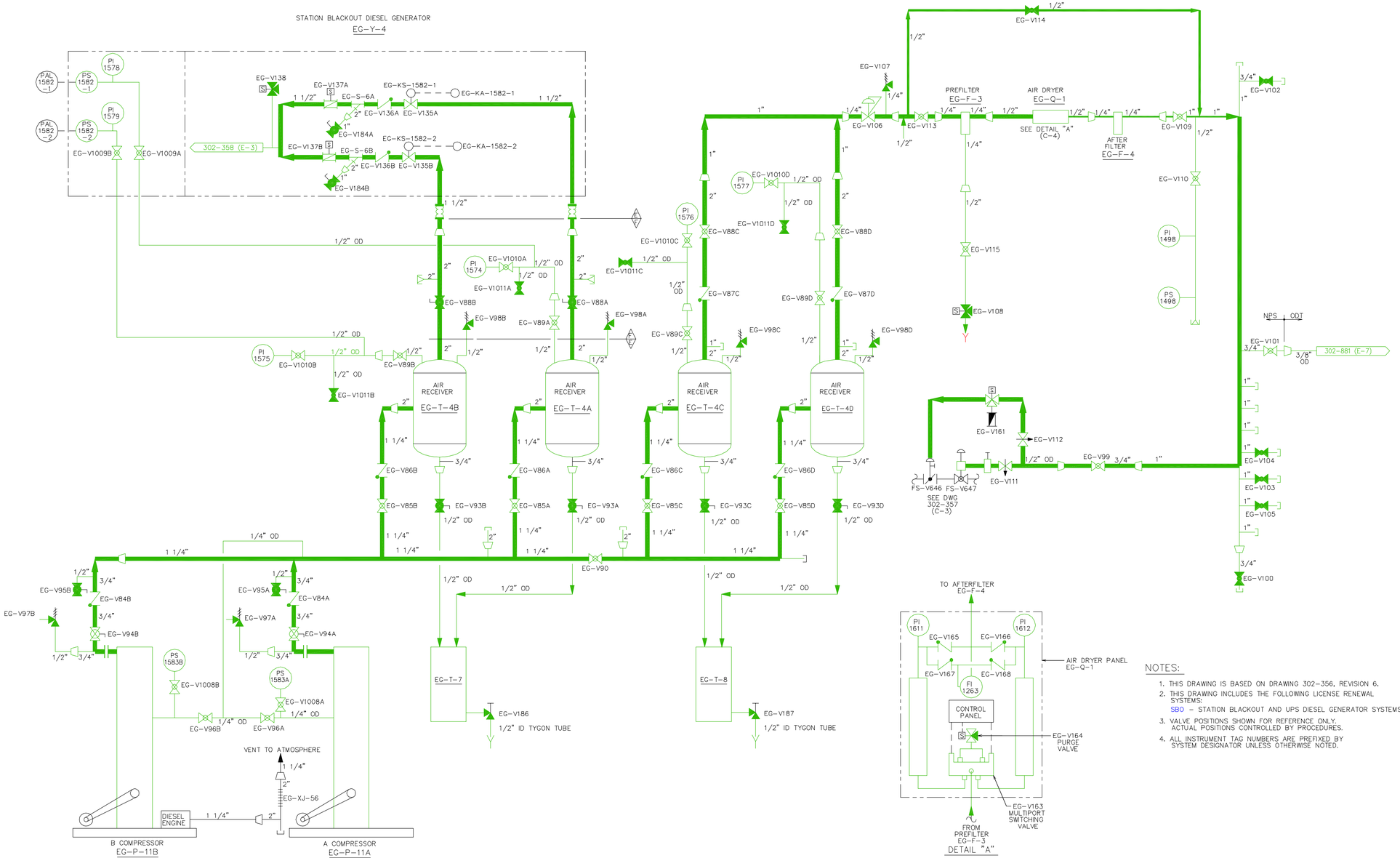

NOTES:

1. THIS DRAWING IS BASED ON DRAWING 302-356, REVISION 6.
2. THIS DRAWING INCLUDES THE FOLLOWING LICENSE RENEWAL SYSTEMS:
   SBO – STATION BLACKOUT AND UPS DIESEL GENERATOR SYSTEMS
3. VALVE POSITIONS SHOWN FOR REFERENCE ONLY. ACTUAL POSITIONS CONTROLLED BY PROCEDURES.
4. ALL INSTRUMENT TAG NUMBERS ARE PREFIXED BY SYSTEM DESIGNATOR UNLESS OTHERWISE NOTED.

TABLE OF ADDITIONS & CHANGES

NO	DATE	DESCRIPTION	REV'D	CHK'D	APP'D
0	01 03 08	INITIAL ISSUE FOR LICENSE RENEWAL	A B	J M C	D P C

MECHANICAL

LICENSE RENEWAL DRAWING
STATION BLACKOUT DIESEL
GENERATOR INSTRUMENT AND
STARTING AIR SYSTEM FOR EG-Y-4
FLOW DIAGRAM

THREE MILE ISLAND
AmerGen

SHEET 1 OF 1 | LR-302-356 | REV 0

DWG NO. LR-302-356 SH. 1

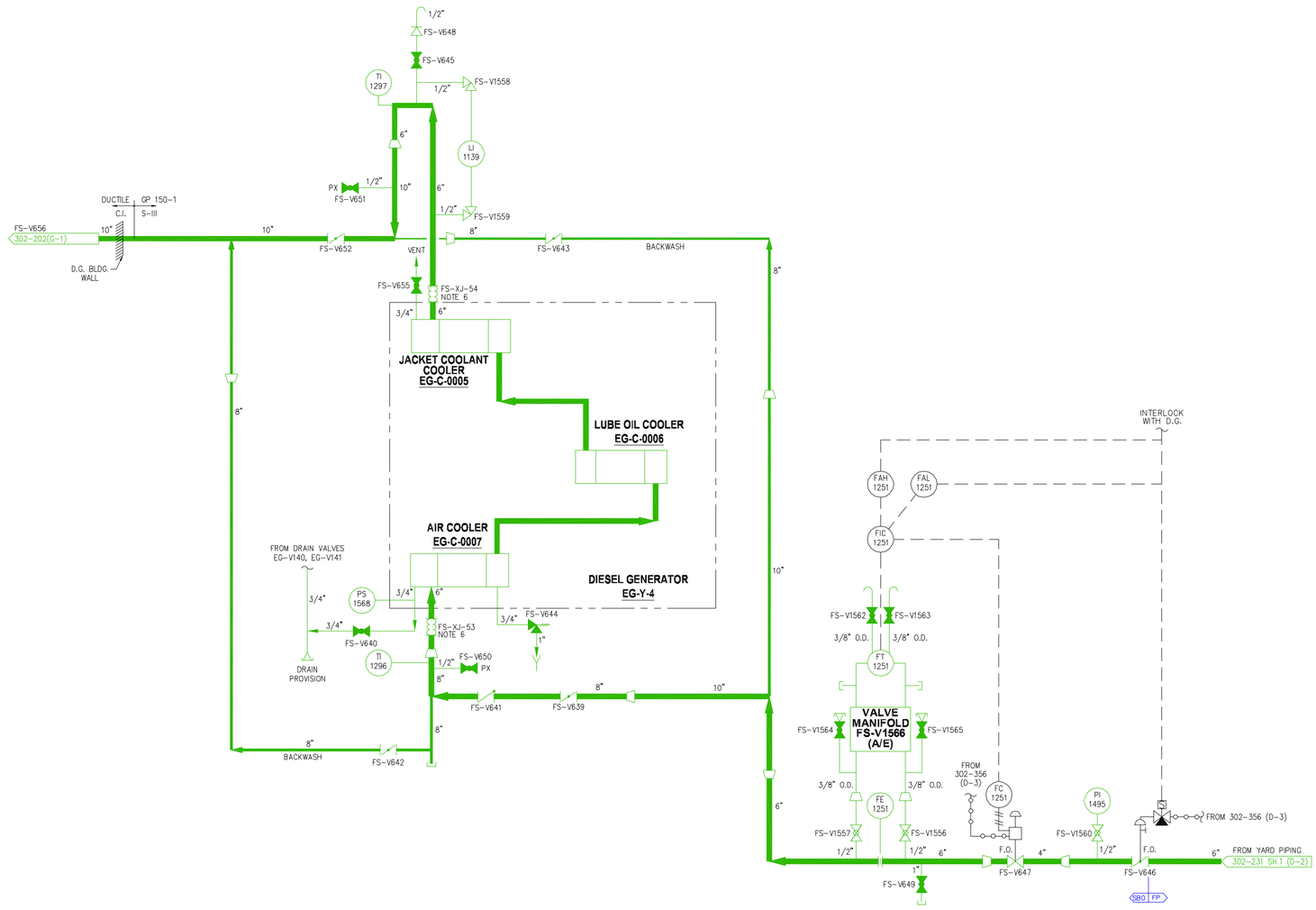

NOTES:

1. THIS DRAWING IS BASED ON DRAWING 302-357, REVISION 4.
2. THIS DRAWING INCLUDES THE FOLLOWING LICENSE RENEWAL SYSTEMS:
   FP – FIRE PROTECTION SYSTEM
   SBO – STATION BLACKOUT & UPS DIESEL GENERATOR SYSTEMS
3. THE TUBE SIDES & SHELL SIDE OF THE JACKET COOLANT COOLER, AIR COOLER, AND LUBE OIL COOLER ARE EVALUATED FOR AGING MANAGEMENT WITH THE SBO SYSTEM.
4. VALVE POSITIONS SHOWN FOR REFERENCE ONLY. ACTUAL POSITIONS CONTROLLED BY PROCEDURES.
5. ALL INSTRUMENT TAG NUMBERS ARE PREFIXED BY SYSTEM DESIGNATOR UNLESS OTHERWISE NOTED.
6. EXPANSION JOINTS ARE SHORT-LIVED AND NOT SUBJECT TO AGING MANAGEMENT REVIEW.

TABLE OF ADDITIONS & CHANGES

NO	DATE	DESCRIPTION	REV'D	CHK'D	APP'D
0	01 03 08	INITIAL ISSUE FOR LICENSE RENEWAL	A B	J M C	D P C

MECHANICAL

LICENSE RENEWAL DRAWING
STATION BLACKOUT DIESEL
GENERATOR COOLING WATER FOR EG-Y-4
FLOW DIAGRAM

THREE MILE ISLAND
AmerGen

SHEET 1 OF 1 LR-302-357 REV 0

DWG.NO. LR-302-357 SH. 1

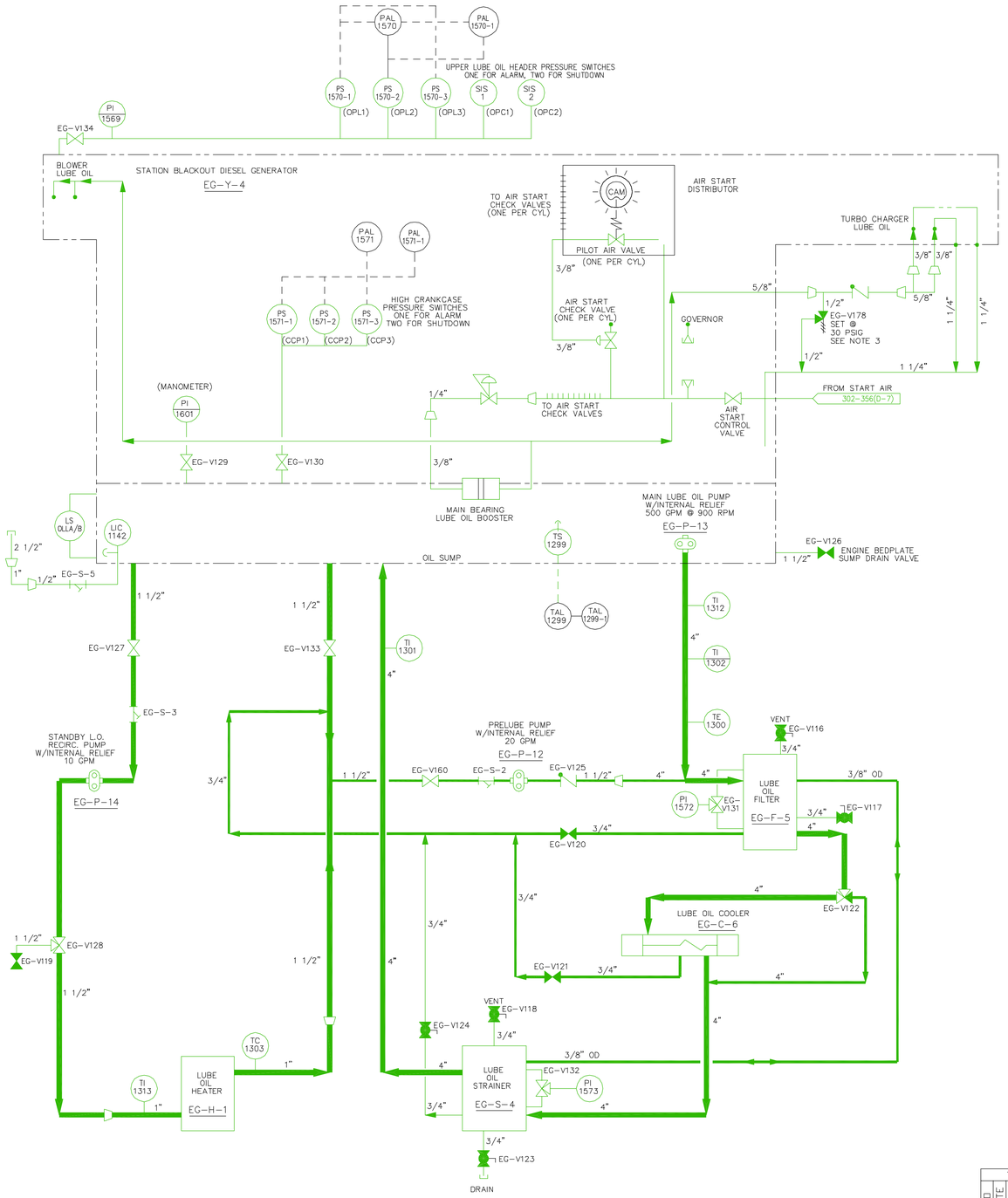

NOTES:

1. THIS DRAWING IS BASED ON DRAWING 302-358, REVISION 3.
2. THIS DRAWING INCLUDES THE FOLLOWING LICESNSE RENEWAL SYSTEMS:
   SBO – STATION BLACKOUT AND UPS DIESEL GENERATOR SYSTEMS
3. VALVE POSITIONS SHOWN FOR REFERENCE ONLY. ACTUAL POSITIONS CONTROLLED BY PROCEDURES.
4. ALL INSTRUMENT TAG NUMBERS ARE PREFIXED BY SYSTEM DESIGNATOR UNLESS OTHERWISE NOTED.

TABLE OF ADDITIONS & CHANGES

NO	DATE	DESCRIPTION	REV'D	CHK'D	APP'D
0	01 03 08	INITIAL ISSUE FOR LICENSE RENEWAL	A B	J M C	D P C

MECHANICAL

LICENSE RENEWAL DRAWING
STATION BLACKOUT DIESEL
GENERATOR LUBE OIL SYSTEM FOR EG-Y-4
FLOW DIAGRAM

THREE MILE ISLAND
AmerGen

SHEET 1 OF 1 | LR-302-358 | REV 0

DWG NO. LR-302-358 SH. 1

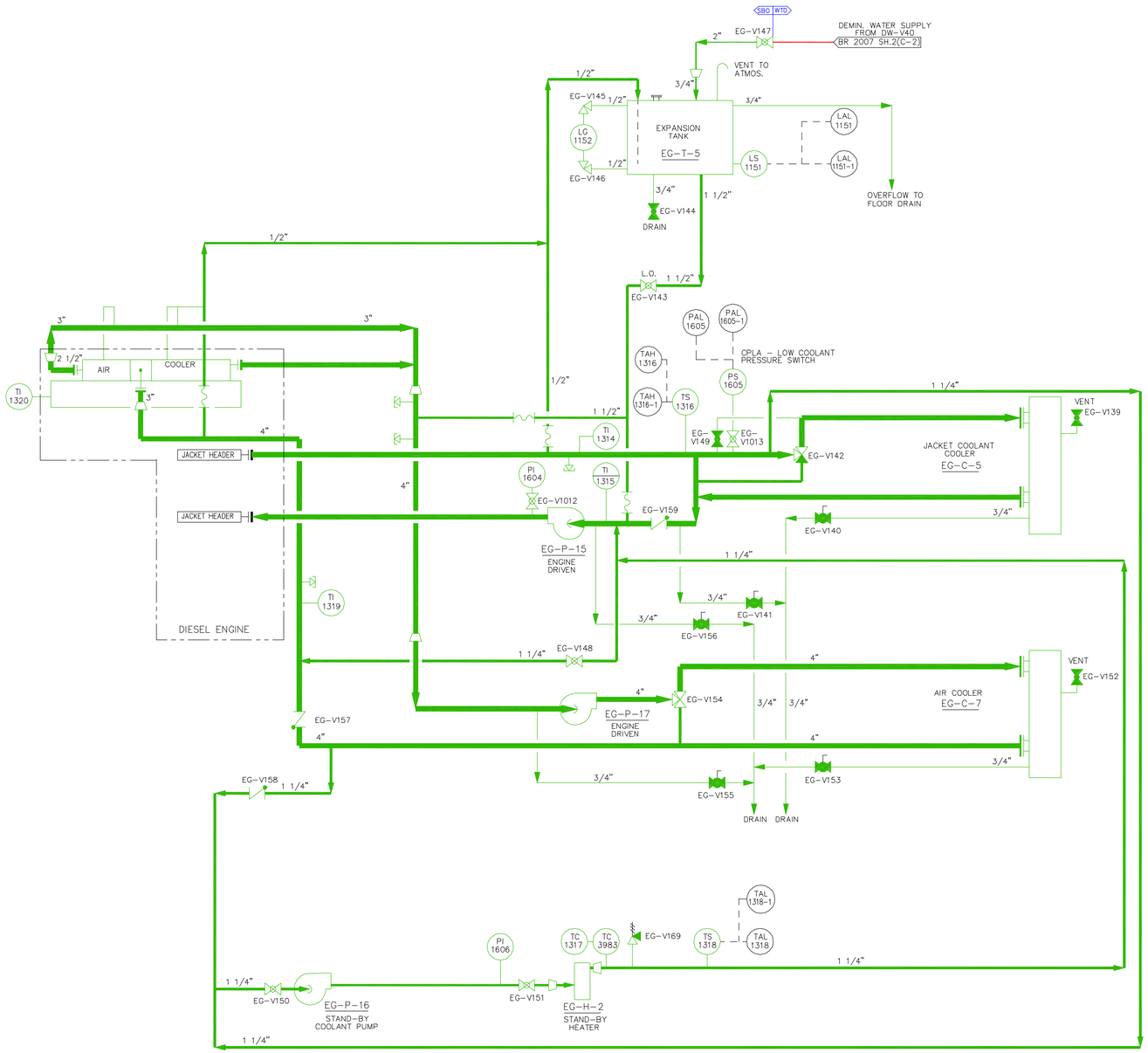

NOTES:

1. THIS DRAWING IS BASED ON DRAWING 302-359, REVISION 4.
2. THIS DRAWING INCLUDES THE FOLLOWING LICENSE RENEWAL SYSTEMS:
   SBO - STATION BLACKOUT & UPS DIESEL GENERATOR SYSTEMS
   WTD - WATER TREATMENT & DISTRIBUTION SYSTEM
3. THE TUBE SIDES AND THE SHELL SIDES OF THE JACKET COOLANT COOLER AND AIR COOLER ARE EVALUATED FOR AGING MANAGEMENT WITH THE SBO SYSTEM.
4. VALVE POSITION SHOWN FOR REFERENCE ONLY. ACTUAL POSITIONS CONTROLLED BY PROCEDURES.
5. ALL INSTRUMENT TAG NUMBERS ARE PREFIXED BY SYSTEM DESIGNATOR UNLESS OTHERWISE NOTED.

TABLE OF ADDITIONS & CHANGES

NO	DATE	DESCRIPTION	REV'D	CHK'D	APP'D
0	01 03 03	INITIAL ISSUE FOR LICENSE RENEWAL	A B	J M C	D P C

MECHANICAL

LICENSE RENEWAL DRAWING
STATION BLACKOUT DIESEL
GENERATOR JACKET COOLING SYSTEM
FLOW DIAGRAM

THREE MILE ISLAND
AmerGen

SHEET 1 OF 1 LR-302-359 REV 0

DWG.NO. LR-302-359 SH. 1

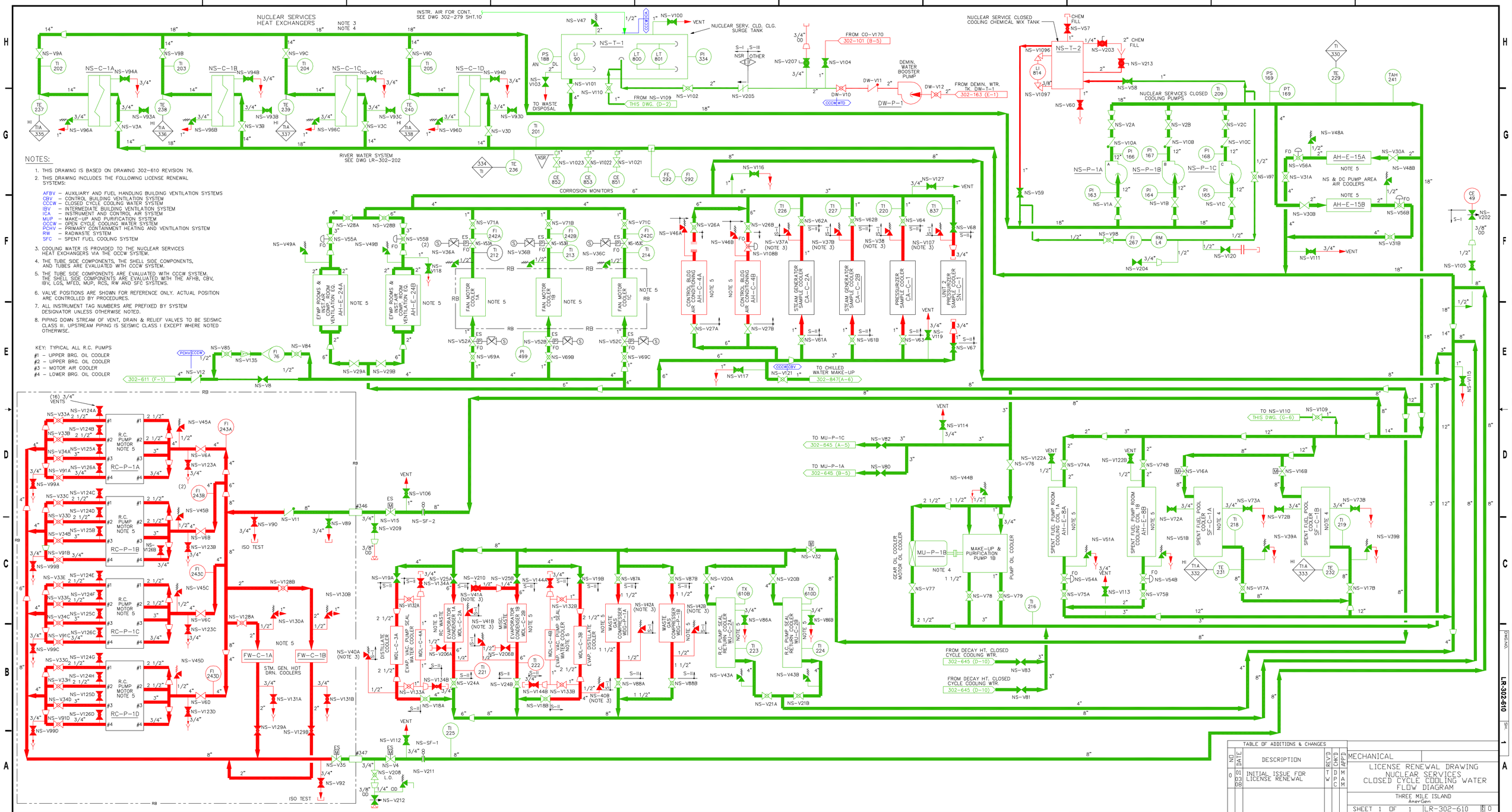
NUCLEAR SERVICES HEAT EXCHANGERS
NOTE 3
NOTE 4
INSTR. AIR FOR CONT. SEE DWG 302-279 SHT.10
NUCLEAR SERV. CLD. CLG. SURGE TANK
FROM CO-V170 302-101 (B-5)
DEMIN. WATER BOOSTER PUMP
FROM DEMIN. WTR. TK. DW-T-1 302-163 (E-1)
NUCLEAR SERVICE CLOSED COOLING CHEMICAL MIX TANK
NUCLEAR SERVICES CLOSED COOLING PUMPS
NS & DC PUMP AREA AIR COOLERS
RIVER WATER SYSTEM SEE DWG LR-302-202
CORROSION MONITORS
TO WASTE DISPOSAL
FROM NS-V109 THIS DWG. (D-2)
TO CHILLED WATER MAKE-UP 302-847(A-6)
TO MU-P-1C 302-645 (A-5)
TO MU-P-1A 302-645 (B-5)
TO NS-V110 THIS DWG. (G-6)
FROM DECAY HT. CLOSED CYCLE COOLING WTR. 302-645 (D-10)
EFWP ROOMS & COMP. ROOM VENTILATION EQ. AH-E-24A
EFWP ROOMS & COMP. ROOM VENTILATION EQ. AH-E-24B
FAN MOTOR COOLER 1A
FAN MOTOR COOLER 1B
FAN MOTOR COOLER 1C
CONTROL BLDG AIR CONDITIONING AH-C-4A
CONTROL BLDG AIR CONDITIONING AH-C-4B
STEAM GENERATOR SAMPLE COOLER CA-C-2A
STEAM GENERATOR SAMPLE COOLER CA-C-2B
PRESSURIZER SAMPLE COOLER CA-C-1
UNIT 2 PRESSURIZER SAMPLE COOLER SN-C-1
AH-E-15A
AH-E-15B
RC-P-1A
RC-P-1B
RC-P-1C
RC-P-1D
FW-C-1A
FW-C-1B
STM. GEN. HOT DRN. COOLERS
MU-P-1B
MAKE-UP & PURIFICATION PUMP 1B
SPENT FUEL POOL COOLER SF-C-1A
SPENT FUEL POOL COOLER SF-C-1B
DISTILLATE COOLER
EVAPORATOR CONDENSER
WASTE GAS COMPRESSOR
R.C. PUMP SEAL RETURN COOLER
ISO TEST
NOTES:
1. THIS DRAWING IS BASED ON DRAWING 302-610 REVISION 76.
2. THIS DRAWING INCLUDES THE FOLLOWING LICENSE RENEWAL SYSTEMS:
AFBV – AUXILIARY AND FUEL HANDLING BUILDING VENTILATION SYSTEMS
CBV – CONTROL BUILDING VENTILATION SYSTEM
CCCW – CLOSED CYCLE COOLING WATER SYSTEM
IBV – INTERMEDIATE BUILDING VENTILATION SYSTEM
ICA – INSTRUMENT AND CONTROL AIR SYSTEM
MUP – MAKE-UP AND PURIFICATION SYSTEM
OCCW – OPEN CYCLE COOLING WATER SYSTEM
PCHV – PRIMARY CONTAINMENT HEATING AND VENTILATION SYSTEM
RW – RADWASTE SYSTEM
SFC – SPENT FUEL COOLING SYSTEM
3. COOLING WATER IS PROVIDED TO THE NUCLEAR SERVICES HEAT EXCHANGERS VIA THE OCCW SYSTEM.
4. THE TUBE SIDE COMPONENTS, THE SHELL SIDE COMPONENTS, AND TUBES ARE EVALUATED WITH CCCW SYSTEM.
5. THE TUBE SIDE COMPONENTS ARE EVALUATED WITH CCCW SYSTEM. THE SHELL SIDE COMPONENTS ARE EVALUATED WITH THE AFHB, CBV, IBV, LGS, MFED, MUP, RCS, RW AND SFC SYSTEMS.
6. VALVE POSITIONS ARE SHOWN FOR REFERENCE ONLY. ACTUAL POSITION ARE CONTROLLED BY PROCEDURES.
7. ALL INSTRUMENT TAG NUMBERS ARE PREFIXED BY SYSTEM DESIGNATOR UNLESS OTHERWISE NOTED.
8. PIPING DOWN STREAM OF VENT, DRAIN & RELIEF VALVES TO BE SEISMIC CLASS III. UPSTREAM PIPING IS SEISMIC CLASS I EXCEPT WHERE NOTED OTHERWISE.
KEY: TYPICAL ALL R.C. PUMPS
#1 – UPPER BRG. OIL COOLER
#2 – UPPER BRG. OIL COOLER
#3 – MOTOR AIR COOLER
#4 – LOWER BRG. OIL COOLER
TABLE OF ADDITIONS & CHANGES
NO | DATE | DESCRIPTION | REV'D | CHK'D | APP'D
0 | 01 03 08 | INITIAL ISSUE FOR LICENSE RENEWAL | TW | DPC | MAM
MECHANICAL
LICENSE RENEWAL DRAWING
NUCLEAR SERVICES
CLOSED CYCLE COOLING WATER
FLOW DIAGRAM
THREE MILE ISLAND
AmerGen
SHEET 1 OF 1 LR-302-610 0
LR-302-610

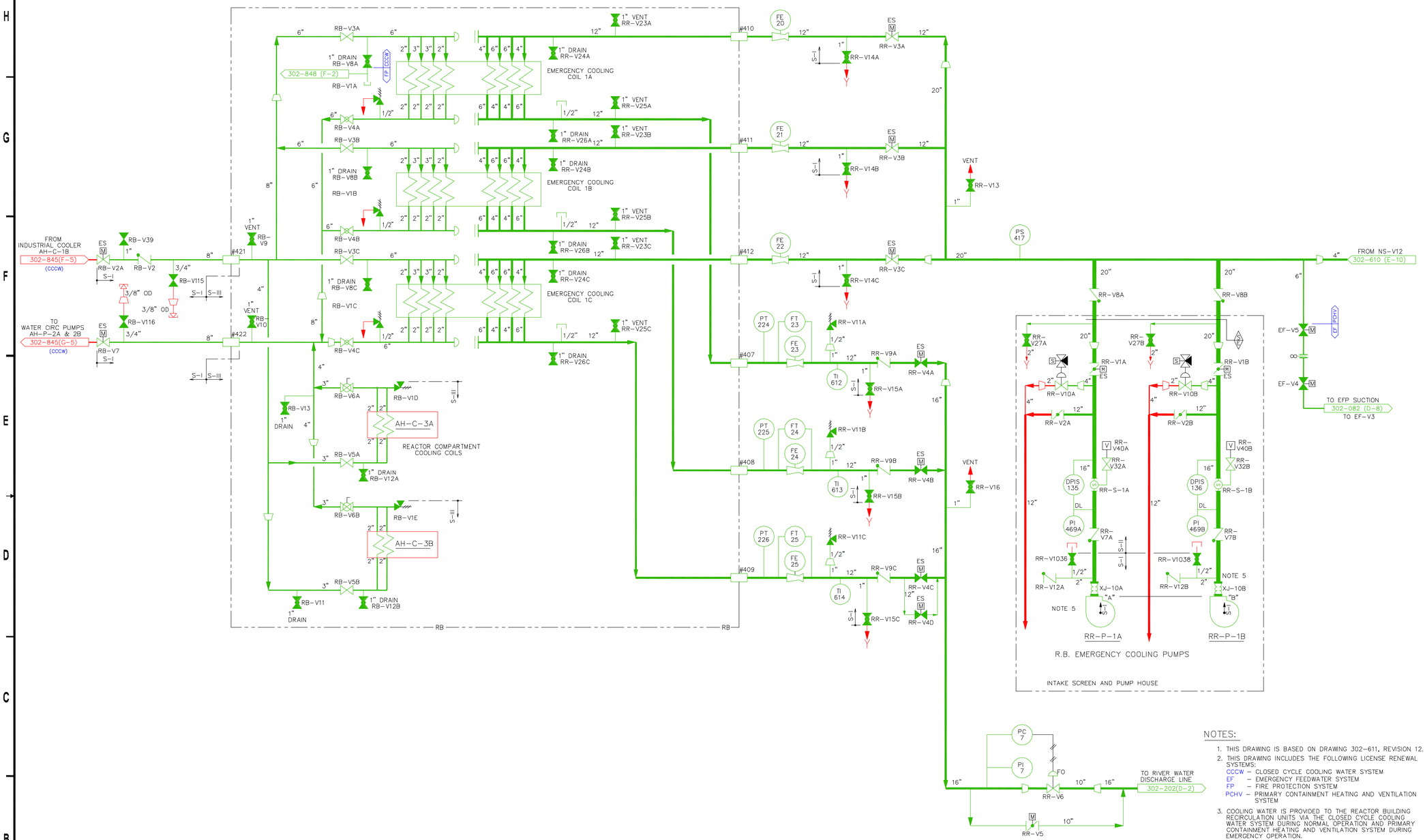

NOTES:

1. THIS DRAWING IS BASED ON DRAWING 302-611, REVISION 12.
2. THIS DRAWING INCLUDES THE FOLLOWING LICENSE RENEWAL SYSTEMS:
   - CCCW – CLOSED CYCLE COOLING WATER SYSTEM
   - EF – EMERGENCY FEEDWATER SYSTEM
   - FP – FIRE PROTECTION SYSTEM
   - PCHV – PRIMARY CONTAINMENT HEATING AND VENTILATION SYSTEM
3. COOLING WATER IS PROVIDED TO THE REACTOR BUILDING RECIRCULATION UNITS VIA THE CLOSED CYCLE COOLING WATER SYSTEM DURING NORMAL OPERATION AND PRIMARY CONTAINMENT HEATING AND VENTILATION SYSTEM DURING EMERGENCY OPERATION.
4. BOTH THE COOLING COILS AND THE SHELL OF THE REACTOR BUILDING RECIRCULATION UNITS ARE EVALUATED FOR AGING MANAGEMENT WITH THE PRIMARY CONTAINMENT HEATING AND VENTILATION SYSTEMS.
5. EXPANSION JOINTS RR-XJ-10A/B ARE CONSIDERED SHORT-LIVED COMPONENTS AND ARE NOT SUBJECT TO AGING MANAGEMENT REVIEW.
6. VALVE POSITION SHOWN FOR REFERENCE ONLY. ACTUAL POSITIONS CONTROLLED BY PROCEDURES.
7. ALL INSTRUMENT TAG NUMBERS ARE PREFIXED BY SYSTEM DESIGNATOR UNLESS OTHERWISE NOTED.

TABLE OF ADDITIONS & CHANGES

NO	DATE	DESCRIPTION	REV'D	CHK'D	APP'D
0	01 03 00	INITIAL ISSUE FOR LICENSE RENEWAL	A B	W H F	D P C

MECHANICAL

LICENSE RENEWAL DRAWING
REACTOR BUILDING NORMAL & EMERGENCY COOLING WATER SYS. FLOW DIAGRAM

THREE MILE ISLAND
AmerGen

SHEET 1 OF 1 | LR-302-611 | 0

DWG.NO. LR-302-611 SH. 1

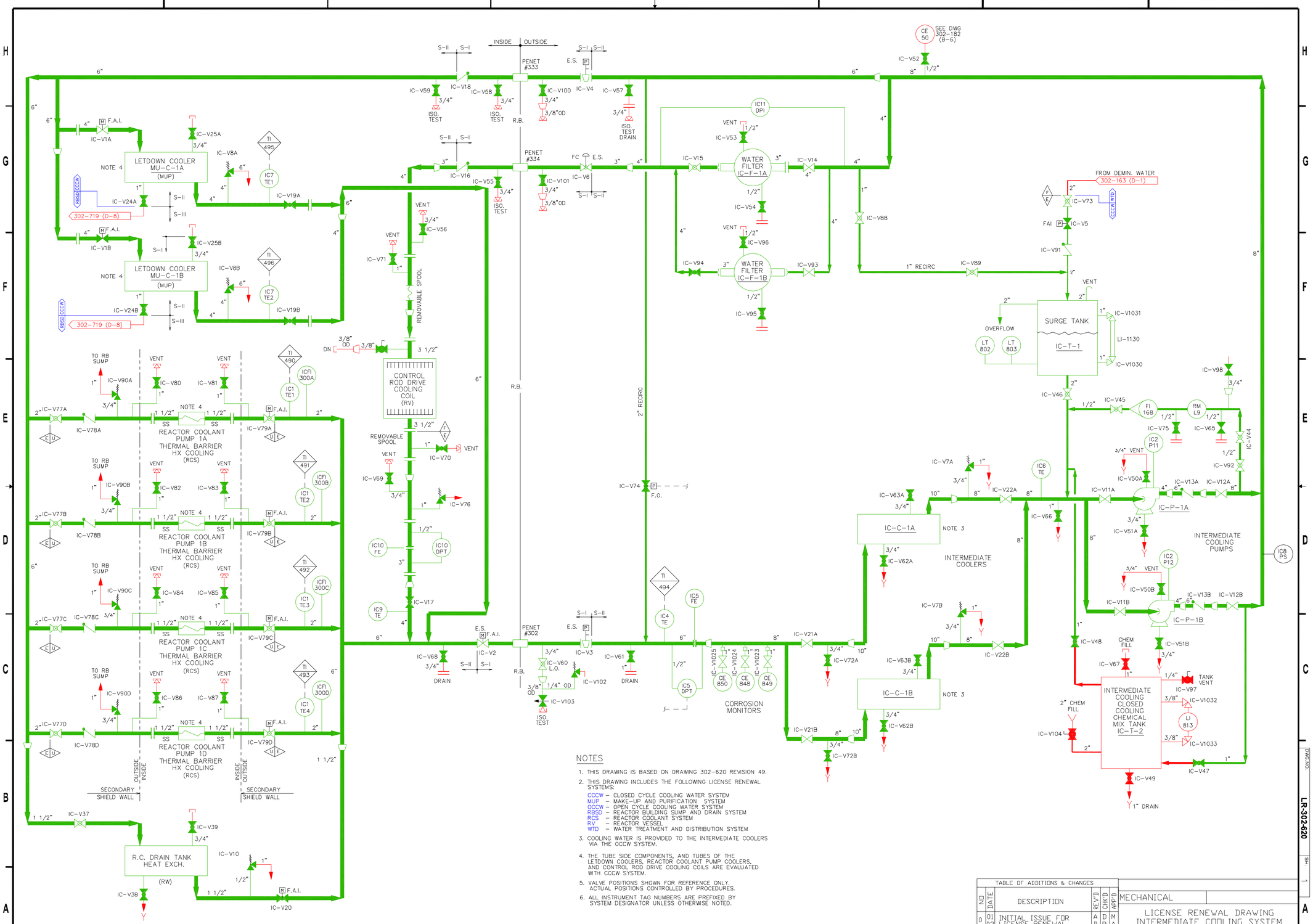

NOTES

1. THIS DRAWING IS BASED ON DRAWING 302-620 REVISION 49.
2. THIS DRAWING INCLUDES THE FOLLOWING LICENSE RENEWAL SYSTEMS:
   - CCCW – CLOSED CYCLE COOLING WATER SYSTEM
   - MUP – MAKE-UP AND PURIFICATION SYSTEM
   - OCCW – OPEN CYCLE COOLING WATER SYSTEM
   - RBSD – REACTOR BUILDING SUMP AND DRAIN SYSTEM
   - RCS – REACTOR COOLANT SYSTEM
   - RV – REACTOR VESSEL
   - WTD – WATER TREATMENT AND DISTRIBUTION SYSTEM
3. COOLING WATER IS PROVIDED TO THE INTERMEDIATE COOLERS VIA THE OCCW SYSTEM.
4. THE TUBE SIDE COMPONENTS, AND TUBES OF THE LETDOWN COOLERS, REACTOR COOLANT PUMP COOLERS, AND CONTROL ROD DRIVE COOLING COILS ARE EVALUATED WITH CCCW SYSTEM.
5. VALVE POSITIONS SHOWN FOR REFERENCE ONLY. ACTUAL POSITIONS CONTROLLED BY PROCEDURES.
6. ALL INSTRUMENT TAG NUMBERS ARE PREFIXED BY SYSTEM DESIGNATOR UNLESS OTHERWISE NOTED.

TABLE OF ADDITIONS & CHANGES

NO	DATE	DESCRIPTION	REV'D	CHK'D	APP'D
0	01 03 08	INITIAL ISSUE FOR LICENSE RENEWAL	A B	D P C	M A M

MECHANICAL

LICENSE RENEWAL DRAWING
INTERMEDIATE COOLING SYSTEM
FLOW DIAGRAM

THREE MILE ISLAND
AmerGen

SHEET 1 OF 1 | LR-302-620 | REV 0

DWG. NO. LR-302-620 SH. 1

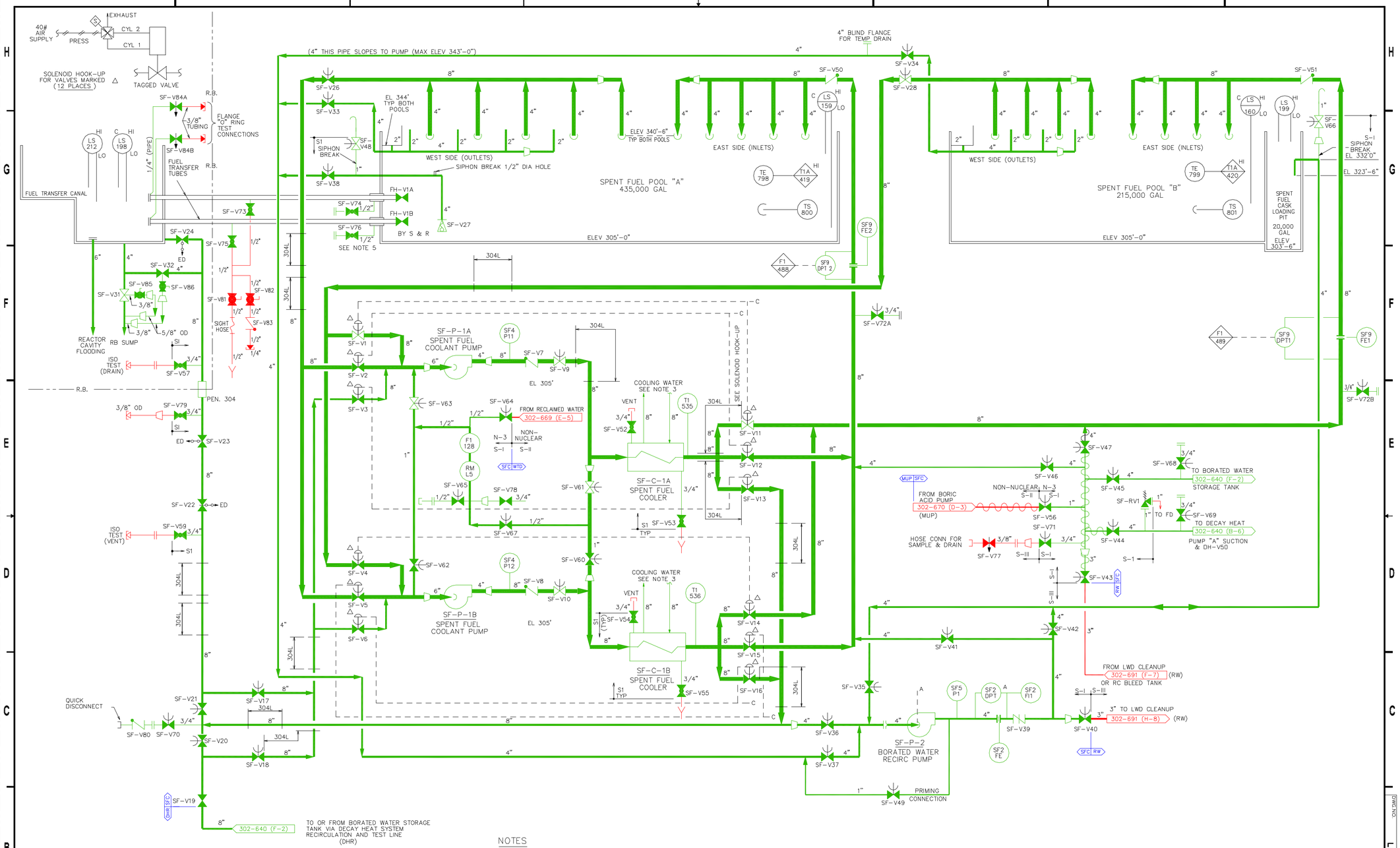

NOTES

1. THIS DRAWING IS BASED ON DRAWING 302-630 REVISION 31.
2. B & W THIS DRAWING INCLUDES THE FOLLOWING LICENSE RENEWAL SYSTEMS:
   - CCCW – CLOSED CYCLE COOLING SYSTEM
   - FHS – FUEL HANDLING AND FUEL STORAGE SYSTEM
   - MUP – MAKE-UP AND PURIFICATION SYSTEM
   - RW – RADWASTE SYSTEM
   - SFC – SPENT FUEL COOLING SYSTEM
   - WTD – WATER TREATMENT AND DISTRIBUTION SYSTEM
3. COOLING WATER IS PROVIDEDTO THE SPENT FUEL COOLERS VIA THE CLOSED CYCLE COOLING SYSTEM.
4. THE TUBE AND SHELL SIDE OF THE SPENT FUEL COOLERS ARE EVALUATED FOR AGING MANAGEMENT WITH THE CLOSED CYCLE COOLING SYSTEM.
5. THE FUEL TRANSFER TUBE DRAIN LINES, FLANGE TEST CONNECTIONS AND SPENT FUEL POOL ISOLATION VALVES ARE EVALUATED FOR AGING MANAGEMENT WITH THE FUEL HANDLING AND FUEL STORAGE SYSTEM.
6. VALVE POSITIONS SHOWN FOR REFERENCE ONLY. ACTUAL POSITIONS CONTROLLED BY PROCEDURES.
7. ALL INSTRUMENT TAG NUMBERS ARE PREFIXED BY SYSTEM DESIGNATOR UNLESS OTHERWISE NOTED.
8. VALVES ARE SHOWN IN NORMAL OPERATING POSITIONS OF COOLING AND FILTERING WATER IN SPENT FUEL POOL B. USING SF-P1A AND SF-C1A FOR COOLING.
9. ALL PIPING IS PIPE SPEC. [C], SEISMIC CLASS AS NOTED, & NUCLEAR CLASS N-3 (EXCEPT AS NOTED)

TABLE OF ADDITIONS & CHANGES

NO	DATE	DESCRIPTION	REV'D	CHK'D	APP'D
0	01 03 08	INITIAL ISSUE FOR LICENSE RENEWAL	A B	S C G	D P C

MECHANICAL

LICENSE RENEWAL DRAWING
SPENT FUEL COOLING SYSTEM
FLOW DIAGRAM

THREE MILE ISLAND
AmerGen

SHEET 1 OF 1 | LR-302-630 | REV 0

DWG NO. LR-302-630 SH. 1

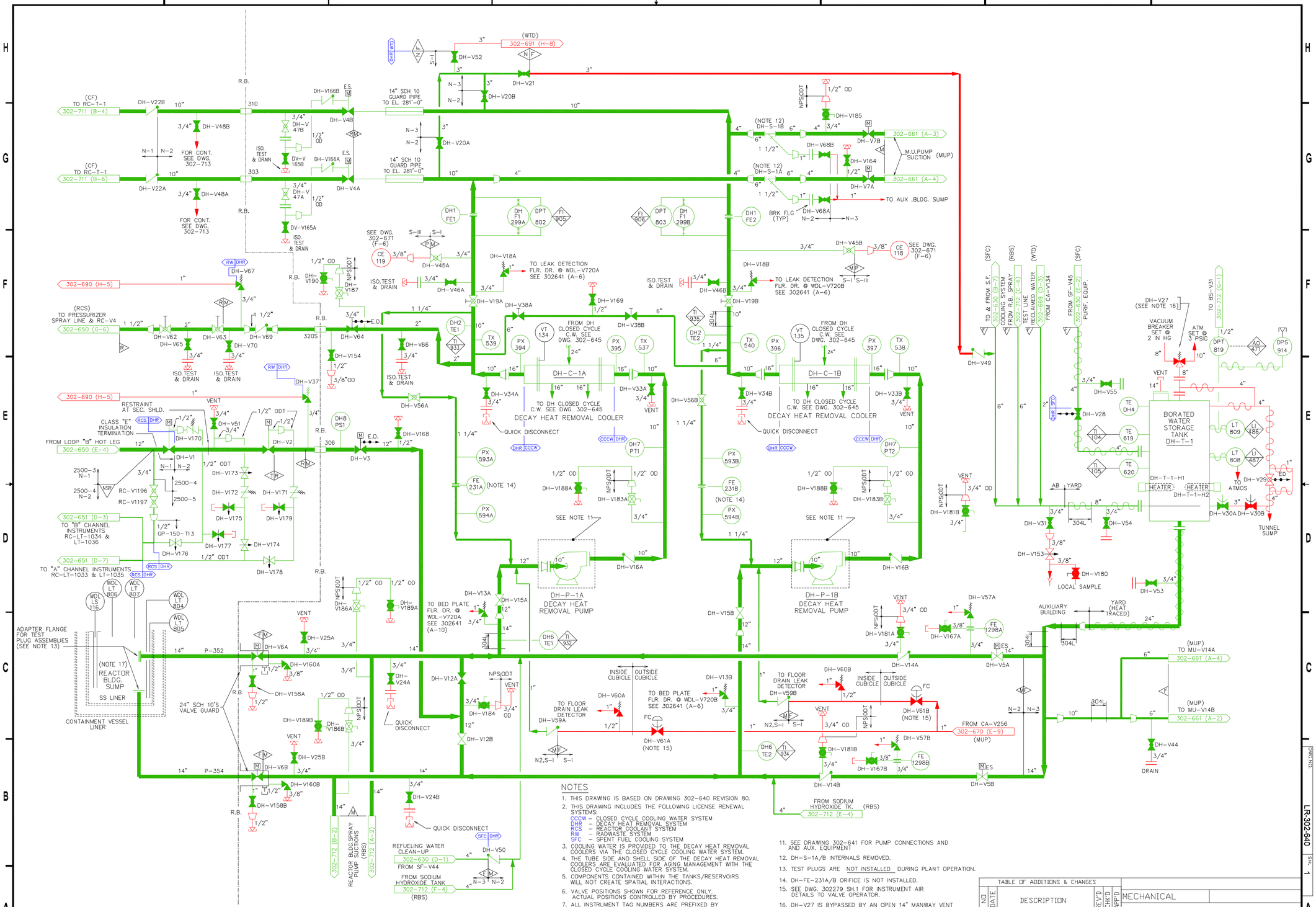

NOTES

1. THIS DRAWING IS BASED ON DRAWING 302-640 REVISION 80.
2. THIS DRAWING INCLUDES THE FOLLOWING LICENSE RENEWAL SYSTEMS:
   CCCW – CLOSED CYCLE COOLING WATER SYSTEM
   DHR – DECAY HEAT REMOVAL SYSTEM
   RCS – REACTOR COOLANT SYSTEM
   RW – RADWASTE SYSTEM
   SFC – SPENT FUEL COOLING SYSTEM
3. COOLING WATER IS PROVIDED TO THE DECAY HEAT REMOVAL COOLERS VIA THE CLOSED CYCLE COOLING WATER SYSTEM.
4. THE TUBE SIDE AND SHELL SIDE OF THE DECAY HEAT REMOVAL COOLERS ARE EVALUATED FOR AGING MANAGEMENT WITH THE CLOSED CYCLE COOLING WATER SYSTEM.
5. COMPONENTS CONTAINED WITHIN THE TANKS/RESERVOIRS WILL NOT CREATE SPATIAL INTERACTIONS.
6. VALVE POSITIONS SHOWN FOR REFERENCE ONLY. ACTUAL POSITIONS CONTROLLED BY PROCEDURES.
7. ALL INSTRUMENT TAG NUMBERS ARE PREFIXED BY SYSTEM DESIGNATOR UNLESS OTHERWISE NOTED.
8. SYSTEM DESIGN BASIS – SEISMIC CLASS I
9. NO INSULATION REQUIRED WITHIN THE AUXILIARY BUILDING EXCEPT FOR PERSONNEL PROTECTION.
10. FOR DESIGN CONDITIONS AND B.& W. INSTRUMENTATION SEE B.& W. DWG. 27554F & DWG. 135756E.
11. SEE DRAWING 302-641 FOR PUMP CONNECTIONS AND AND AUX. EQUIPMENT
12. DH-S-1A/B INTERNALS REMOVED.
13. TEST PLUGS ARE NOT INSTALLED DURING PLANT OPERATION.
14. DH-FE-231A/B ORIFICE IS NOT INSTALLED.
15. SEE DWG. 302279 SH.1 FOR INSTRUMENT AIR DETAILS TO VALVE OPERATOR.
16. DH-V27 IS BYPASSED BY AN OPEN 14" MANWAY VENT
17. REACTOR BUILDING SUMP SCREEN ASSEMBLY (NOT SHOWN) IS IN SCOPE FOR LICENSE RENEWAL AND IS INCLUDED WITH THE REACTOR BUILDING SUMP AND DRAIN SYSTEM.

TABLE OF ADDITIONS & CHANGES

NO	DATE	DESCRIPTION	REV'D	CHK'D	APP'D
0	01 03 08	INITIAL ISSUE FOR LICENSE RENEWAL	T W	S C G	D P C

MECHANICAL

LICENSE RENEWAL DRAWING
DECAY HEAT REMOVAL
FLOW DIAGRAM

THREE MILE ISLAND
AmerGen

SHEET 1 OF 1 LR-302-640 0

DWG.NO. LR-302-640 SH. 1

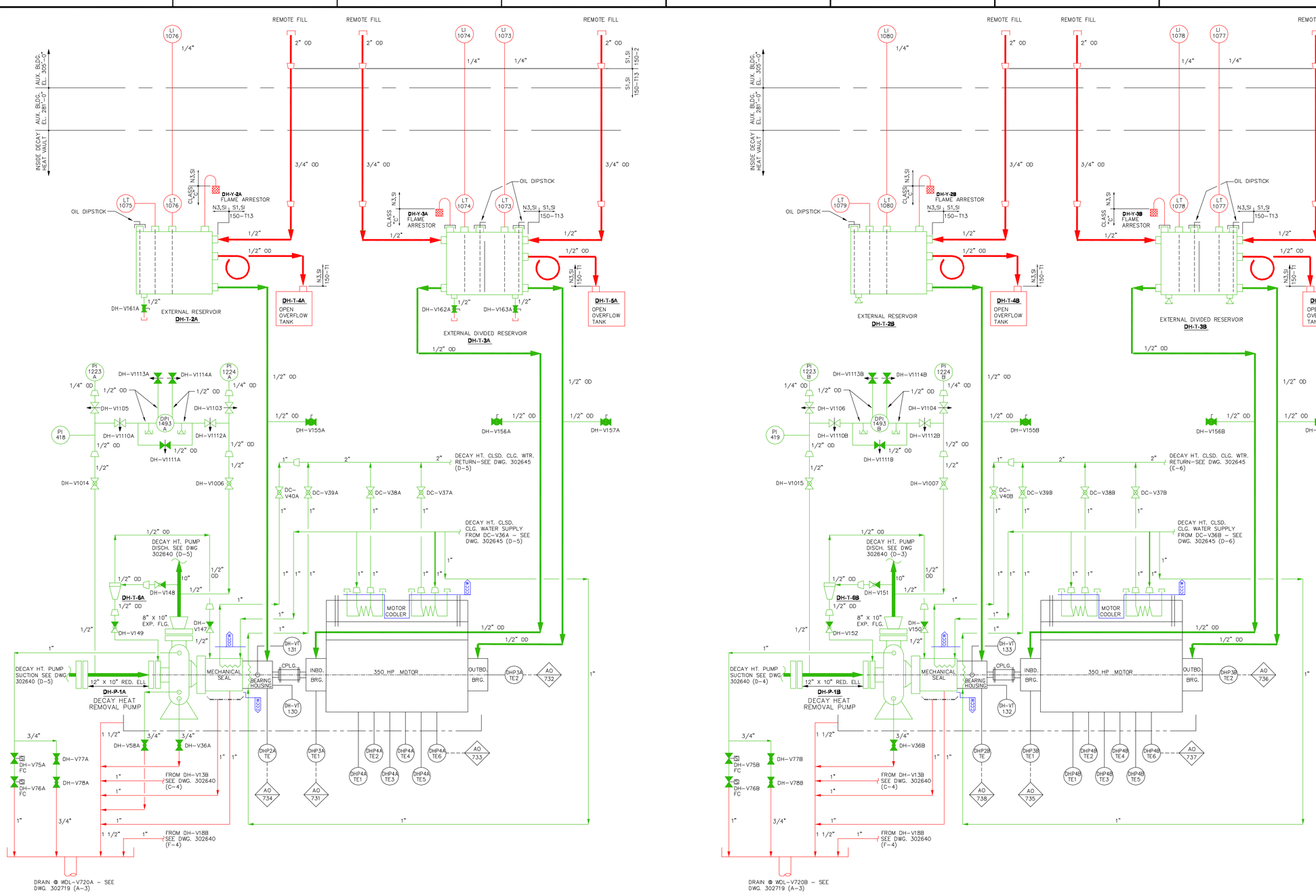

NOTES

1. THIS DRAWING IS BASED ON DRAWING 302-641, REVISION 6.
2. THIS DRAWING INCLUDES THE FOLLOWING LICENSE RENEWAL SYSTEMS:
   DHR – DECAY HEAT REMOVAL SYSTEM
   CCCW – CLOSED CYCLE COOLING WATER SYSTEM
3. COOLING WATER IS PROVIDED TO THE DECAY HEAT REMOVAL PUMP MECHANICAL SEALS AND BEARINGS, AND THE DECAY HEAT REMOVAL PUMP MOTOR COOLERS VIA THE CLOSED CYCLE COOLING WATER SYSTEM.
4. TEMPERATURE ELEMENTS ASSOCIATED WITH THE DECAY HEAT REMOVAL PUMP AND MOTOR BEARINGS ARE NOT INSTALLED IN A THERMOWELL AND ARE CONSIDERED ACTIVE INSTRUMENTS NOT SUBJECT TO AGING MANAGEMENT REVIEW.
5. DECAY HEAT REMOVAL PUMP MOTOR TEMPERATURE ELEMENTS ARE SUFACE MOUNTED AND DO NOT PERFORM A LEAKAGE BOUNDARY/PRESSURE BOUNDARY INTENDED FUNCTION.
6. COMPONENTS CONTAINED WITHIN THE TANKS/RESERVIORS WILL NOT CREATE SPATIAL INTERACTIONS.
7. COMPONENTS AND PIPING NOT PART OF THE DECAY HEAT REMOVAL SYSTEM ARE SHOWN FOR INFORMATION ONLY.
8. VALVE POSITIONS SHOWN FOR REFERENCE ONLY. ACTUAL POSITIONS CONTROLLED BY PROCEDURES.
9. ALL INSTRUMENT TAG NUMBERS ARE PREFIXED BY SYSTEM DESIGNATOR UNLESS OTHERWISE NOTED.
10. SYSTEM DESIGN BASIS – SEISMIC CLASS I

TABLE OF ADDITIONS & CHANGES

NO	DATE	DESCRIPTION	REV'D	CHK'D	APP'D
0	01 03 08	INITIAL ISSUE FOR LICENSE RENEWAL	A B	S C G	D P C

MECHANICAL

LICENSE RENEWAL DRAWING
DECAY HEAT REMOVAL
DECAY HT. PUMPS 1A/B AUX. SYSTEMS
FLOW DIAGRAM

THREE MILE ISLAND
AmerGen

SHEET 1 OF 1 LR-302-641 REV 0

DWG NO. LR-302-641 SH 1

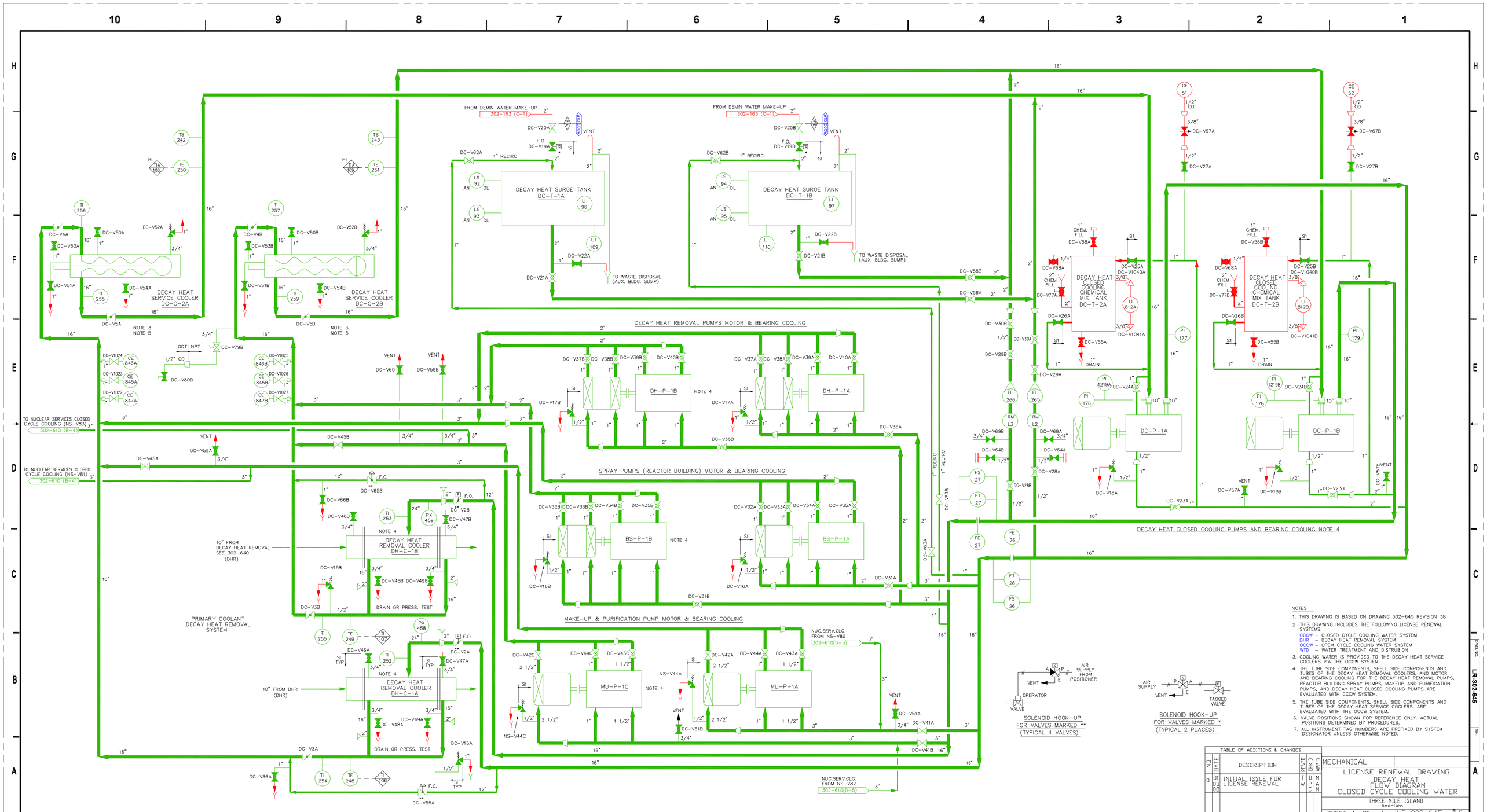

NOTES

1. THIS DRAWING IS BASED ON DRAWING 302-645 REVISION 38.
2. THIS DRAWING INCLUDES THE FOLLOWING LICENSE RENEWAL SYSTEMS:
   CCCW – CLOSED CYCLE COOLING WATER SYSTEM
   DHR – DECAY HEAT REMOVAL SYSTEM
   OCCW – OPEM CYCLE COOLING WATER SYSTEM
   WTD – WATER TREATMENT AND DISTRUBION
3. COOLING WATER IS PROVIDED TO THE DECAY HEAT SERVICE COOLERS VIA THE OCCW SYSTEM.
4. THE TUBE SIDE COMPONENTS, SHELL SIDE COMPONENTS AND TUBES OF THE DECAY HEAT REMOVAL COOLERS, AND MOTOR AND BEARING COOLING FOR THE DECAY HEAT REMOVAL PUMPS, REACTOR BUILDING SPRAY PUMPS, MAKEUP AND PURIFICATION PUMPS, AND DECAY HEAT CLOSED COOLING PUMPS ARE EVALUATED WITH CCCW SYSTEM.
5. THE TUBE SIDE COMPONENTS, SHELL SIDE COMPONENTS AND TUBES OF THE DECAY HEAT SERVICE COOLERS, ARE EVALUATED WITH THE OCCW SYSTEM.
6. VALVE POSITIONS SHOWN FOR REFERENCE ONLY. ACTUAL POSITIONS DETERMINED BY PROCEDURES.
7. ALL INSTRUMENT TAG NUMBERS ARE PREFIXED BY SYSTEM DESIGNATOR UNLESS OTHERWISE NOTED.

TABLE OF ADDITIONS & CHANGES

NO	DATE	DESCRIPTION	REV'D TW	DRW'D DPC	CHK'D	APP'D MAM
0	01 03 08	INITIAL ISSUE FOR LICENSE RENEWAL				

MECHANICAL

LICENSE RENEWAL DRAWING
DECAY HEAT
FLOW DIAGRAM
CLOSED CYCLE COOLING WATER

THREE MILE ISLAND
AmerGen

SHEET 1 OF 1 LR-302-645 0

DWG NO. LR-302-645 SH.

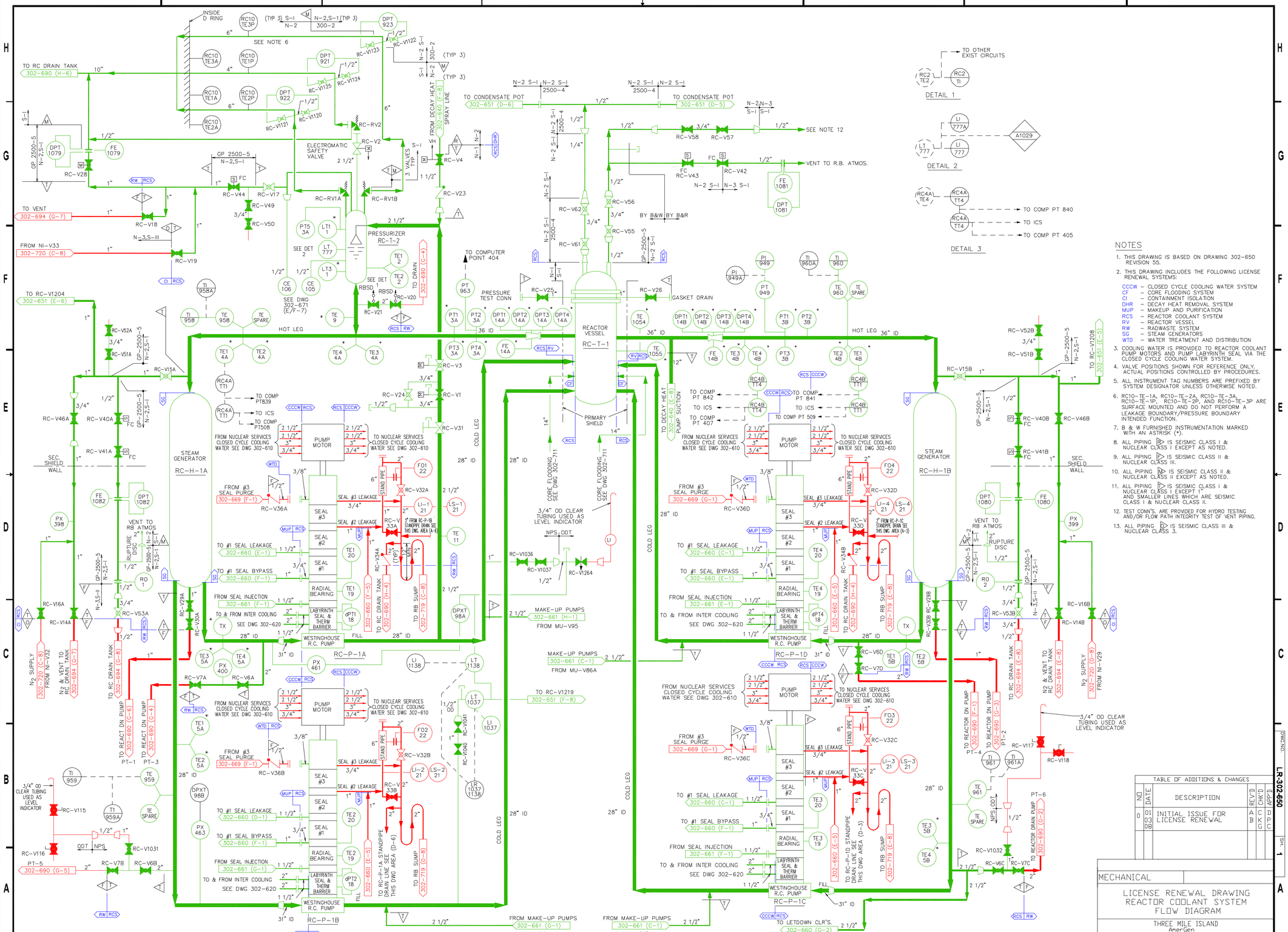

NOTES

1. THIS DRAWING IS BASED ON DRAWING 302-650 REVISION 55.
2. THIS DRAWING INCLUDES THE FOLLOWING LICENSE RENEWAL SYSTEMS:
   - CCCW – CLOSED CYCLE COOLING WATER SYSTEM
   - CF – CORE FLOODING SYSTEM
   - CI – CONTAINMENT ISOLATION
   - DHR – DECAY HEAT REMOVAL SYSTEM
   - MUP – MAKEUP AND PURIFICATION
   - RCS – REACTOR COOLANT SYSTEM
   - RV – REACTOR VESSEL
   - RW – RADWASTE SYSTEM
   - SG – STEAM GENERATORS
   - WTD – WATER TREATMENT AND DISTRIBUTION
3. COOLING WATER IS PROVIDED TO REACTOR COOLANT PUMP MOTORS AND PUMP LABYRINTH SEAL VIA THE CLOSED CYCLE COOLING WATER SYSTEM.
4. VALVE POSITIONS SHOWN FOR REFERENCE ONLY. ACTUAL POSITIONS CONTROLLED BY PROCEDURES.
5. ALL INSTRUMENT TAG NUMBERS ARE PREFIXED BY SYSTEM DESIGNATOR UNLESS OTHERWISE NOTED.
6. RC10–TE–1A, RC10–TE–2A, RC10–TE–3A, RC10–TE–1P, RC10–TE–2P, AND RC10–TE–3P ARE SURFACE MOUNTED AND DO NOT PERFORM A LEAKAGE BOUNDARY/PRESSURE BOUNDARY INTENDED FUNCTION.
7. B & W FURNISHED INSTRUMENTATION MARKED WITH AN ASTRISK (*).
8. ALL PIPING ▷ IS SEISMIC CLASS I & NUCLEAR CLASS I EXCEPT AS NOTED.
9. ALL PIPING ▷ IS SEISMIC CLASS II & NUCLEAR CLASS III.
10. ALL PIPING ▷ IS SEISMIC CLASS II & NUCLEAR CLASS II EXCEPT AS NOTED.
11. ALL PIPING ▷ IS SEISMIC CLASS I & NUCLEAR CLASS I EXCEPT FOR AND SMALLER LINES WHICH ARE SEISMIC CLASS I & NUCLEAR CLASS II.
12. TEST CONN'S. ARE PROVIDED FOR HYDRO TESTING AND/OR FLOW PATH INTEGRITY TEST OF VENT PIPING.
13. ALL PIPING ▷ IS SEISMIC CLASS III & NUCLEAR CLASS 3.

TABLE OF ADDITIONS & CHANGES

NO	DATE	DESCRIPTION	REV'D	CHK'D	APP'D
0	01 03 08	INITIAL ISSUE FOR LICENSE RENEWAL	A	C.T.	D.C.

MECHANICAL

LICENSE RENEWAL DRAWING
REACTOR COOLANT SYSTEM
FLOW DIAGRAM

THREE MILE ISLAND
AmerGen

SHEET 1 OF 1 | LR-302-650 | REV 0

DWG.NO. LR-302-650 SH. 1

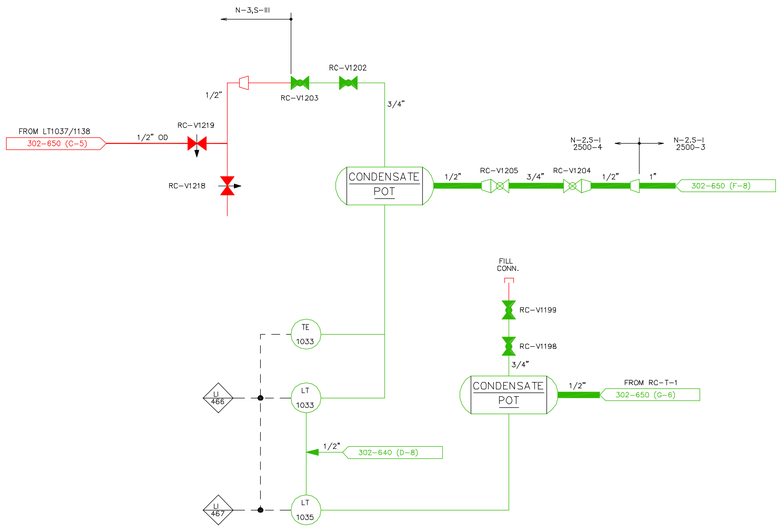

"A" CHANNEL INSTRUMENTS

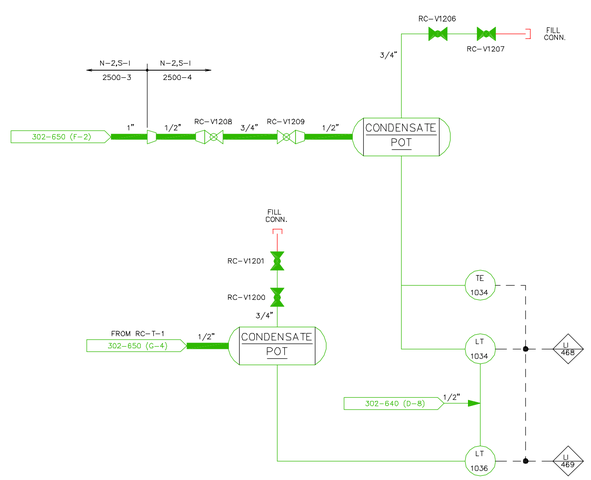

"B" CHANNEL INSTRUMENTS

NOTES

1. THIS DRAWING IS BASED ON DRAWING 302-651 REVISION 5.
2. THIS DRAWING INCLUDES THE FOLLOWING LICENSE RENEWAL SYSTEMS:
   RCS – REACTOR COOLANT SYSTEM
3. VALVE POSITIONS SHOWN FOR REFERENCE ONLY. ACTUAL POSITIONS DETERMINED BY PROCEDURES.
4. ALL INSTRUMENT TAG NUMBERS ARE PREFIXED BY SYSTEM DESIGNATOR UNLESS OTHERWISE NOTED.

TABLE OF ADDITIONS & CHANGES

NO	DATE	DESCRIPTION	REV'D	CHK'D	APP'D
0	01 03 03	INITIAL ISSUE FOR LICENSE RENEWAL	AB	CKG	DPC

MECHANICAL

LICENSE RENEWAL DRAWING
REACTOR COOLANT
FLOW DIAGRAM

THREE MILE ISLAND
AmerGen

SHEET 1 OF 1 | LR-302-651 | REV 0

DWG NO. LR-302-651 SH. 1

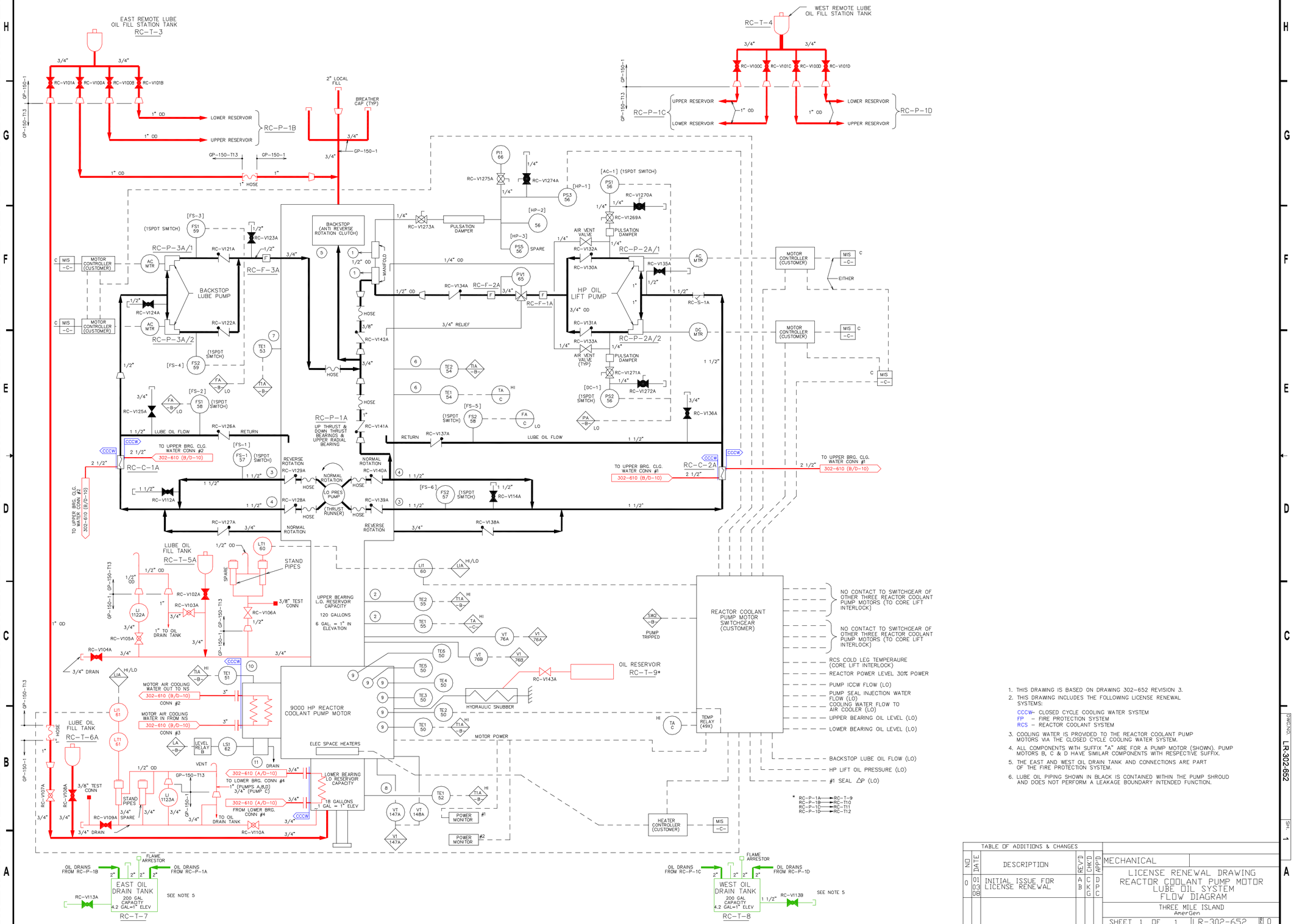

1. THIS DRAWING IS BASED ON DRAWING 302-652 REVISION 3.
2. THIS DRAWING INCLUDES THE FOLLOWING LICENSE RENEWAL SYSTEMS:
   CCCW- CLOSED CYCLE COOLING WATER SYSTEM
   FP - FIRE PROTECTION SYSTEM
   RCS - REACTOR COOLANT SYSTEM
3. COOLING WATER IS PROVIDED TO THE REACTOR COOLANT PUMP MOTORS VIA THE CLOSED CYCLE COOLING WATER SYSTEM.
4. ALL COMPONENTS WITH SUFFIX "A" ARE FOR A PUMP MOTOR (SHOWN). PUMP MOTORS B, C & D HAVE SIMILAR COMPONENTS WITH RESPECTIVE SUFFIX.
5. THE EAST AND WEST OIL DRAIN TANK AND CONNECTIONS ARE PART OF THE FIRE PROTECTION SYSTEM.
6. LUBE OIL PIPING SHOWN IN BLACK IS CONTAINED WITHIN THE PUMP SHROUD AND DOES NOT PERFORM A LEAKAGE BOUNDARY INTENDED FUNCTION.

* RC-P-1A→RC-T-9
RC-P-1B→RC-T10
RC-P-1C→RC-T11
RC-P-1D→RC-T12

TABLE OF ADDITIONS & CHANGES

NO	DATE	DESCRIPTION	REV'D	CHK'D	APP'D
0	01 03 08	INITIAL ISSUE FOR LICENSE RENEWAL	A B	C K G	D P C

MECHANICAL

LICENSE RENEWAL DRAWING
REACTOR COOLANT PUMP MOTOR
LUBE OIL SYSTEM
FLOW DIAGRAM

THREE MILE ISLAND
AmerGen

SHEET 1 OF 1 LR-302-652 REV 0

DWG.NO. LR-302-652 SH. 1

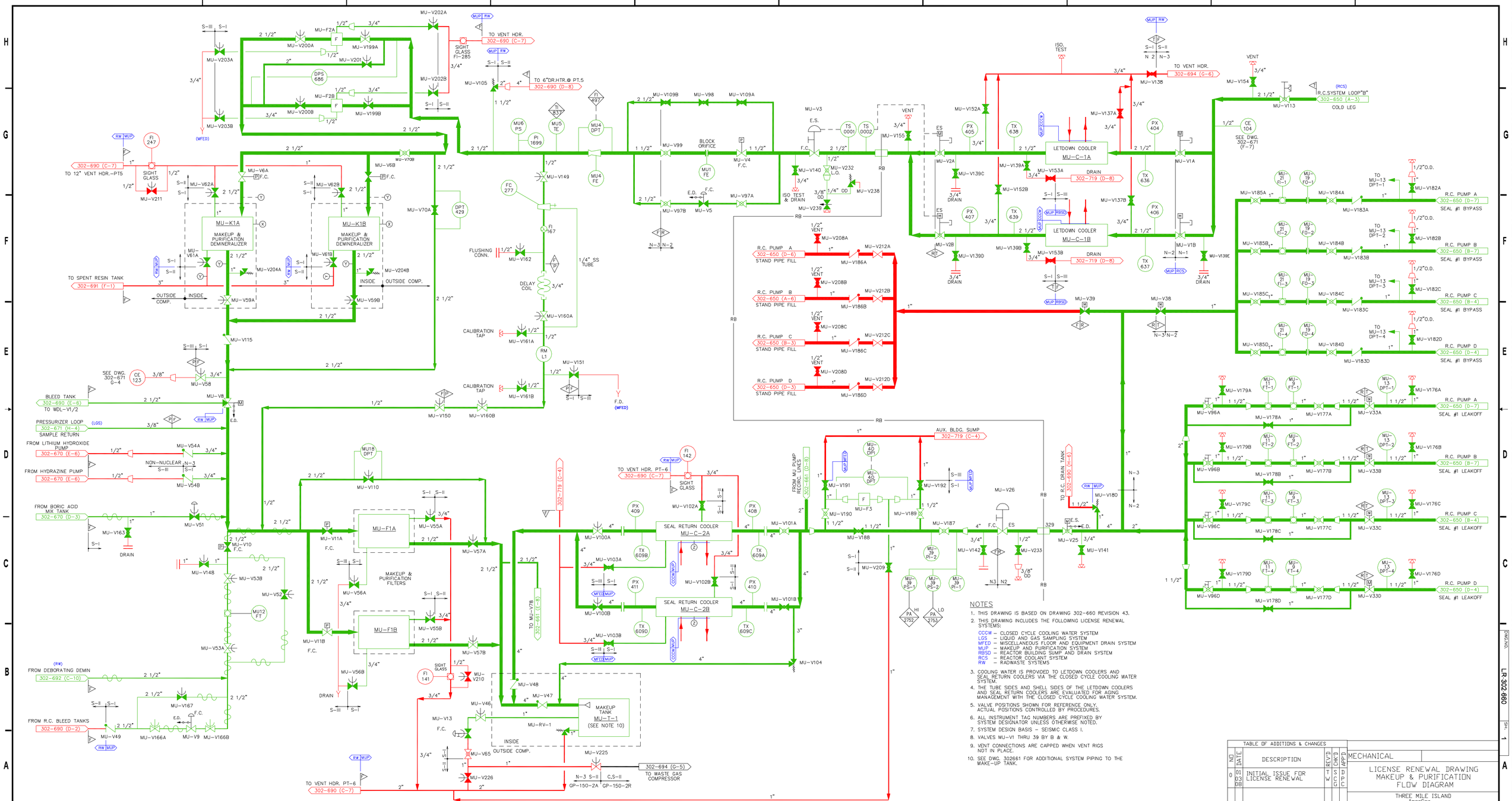
MAKEUP & PURIFICATION DEMINERALIZER
MU-K1A
MU-K1B
LETDOWN COOLER
MU-C-1A
MU-C-1B
SEAL RETURN COOLER
MU-C-2A
MU-C-2B
MU-F1A
MU-F1B
MAKEUP & PURIFICATION FILTERS
MAKEUP TANK
MU-T-1
(SEE NOTE 10)
R.C. PUMP A
R.C. PUMP B
R.C. PUMP C
R.C. PUMP D
SEAL #1 BYPASS
SEAL #1 LEAKOFF
TO VENT HDR.
302-690 (C-7)
TO SPENT RESIN TANK
302-691 (F-1)
BLEED TANK
302-690 (E-6)
PRESSURIZER LOOP
302-671 (H-4)
SAMPLE RETURN
FROM LITHIUM HYDROXIDE PUMP
302-670 (E-6)
FROM HYDRAZINE PUMP
302-670 (E-6)
FROM BORIC ACID MIX TANK
302-670 (D-3)
FROM DEBORATING DEMIN
302-692 (C-10)
FROM R.C. BLEED TANKS
302-690 (D-2)
TO VENT HDR. PT-6
302-690 (C-7)
302-694 (G-5)
TO WASTE GAS COMPRESSOR
AUX. BLDG. SUMP
302-719 (C-4)
TO R.C. DRAIN TANK
302-660 (H-6)
R.C.SYSTEM LOOP"B"
302-650 (A-3)
COLD LEG
SEE DWG. 302-671 (F-7)
SEE DWG. 302-671 G-4
TO 12" VENT HDR.-PT5
TO 6"DR.HTR.@ PT.5
302-690 (D-8)
302-694 (G-6)
302-719 (D-8)
302-650 (D-6)
302-650 (A-6)
302-650 (B-3)
302-650 (D-3)
302-650 (B-7)
302-650 (D-7)
302-650 (B-4)
302-650 (D-4)
302-660 (H-6)
302-661 (D-8)
302-718 (C-4)
302-661 (C-8)
302-661 (C-5)
NOTES
1. THIS DRAWING IS BASED ON DRAWING 302-660 REVISION 43.
2. THIS DRAWING INCLUDES THE FOLLOWING LICENSE RENEWAL SYSTEMS:
CCCW – CLOSED CYCLE COOLING WATER SYSTEM
LGS – LIQUID AND GAS SAMPLING SYSTEM
MFED – MISCELLANEOUS FLOOR AND EQUIPMENT DRAIN SYSTEM
MUP – MAKEUP AND PURIFICATION SYSTEM
RBSD – REACTOR BUILDING SUMP AND DRAIN SYSTEM
RCS – REACTOR COOLANT SYSTEM
RW – RADWASTE SYSTEMS
3. COOLING WATER IS PROVIDED TO LETDOWN COOLERS AND SEAL RETURN COOLERS VIA THE CLOSED CYCLE COOLING WATER SYSTEM.
4. THE TUBE SIDES AND SHELL SIDES OF THE LETDOWN COOLERS AND SEAL RETURN COOLERS ARE EVALUATED FOR AGING MANAGEMENT WITH THE CLOSED CYCLE COOLING WATER SYSTEM.
5. VALVE POSITIONS SHOWN FOR REFERENCE ONLY. ACTUAL POSITIONS CONTROLLED BY PROCEDURES.
6. ALL INSTRUMENT TAG NUMBERS ARE PREFIXED BY SYSTEM DESIGNATOR UNLESS OTHERWISE NOTED.
7. SYSTEM DESIGN BASIS – SEISMIC CLASS I.
8. VALVES MU-V1 THRU 39 BY B & W.
9. VENT CONNECTIONS ARE CAPPED WHEN VENT RIGS NOT IN PLACE.
10. SEE DWG. 302661 FOR ADDITIONAL SYSTEM PIPING TO THE MAKE-UP TANK.
TABLE OF ADDITIONS & CHANGES
NO | DATE | DESCRIPTION | REV'D | CK'D | APP'D
0 | 01 03 88 | INITIAL ISSUE FOR LICENSE RENEWAL | T W | S C G | D P C
MECHANICAL
LICENSE RENEWAL DRAWING
MAKEUP & PURIFICATION
FLOW DIAGRAM
THREE MILE ISLAND
AmerGen
SHEET 1 OF 1
LR-302-660
REV 0
DWG NO. LR-302-660
SH. 1

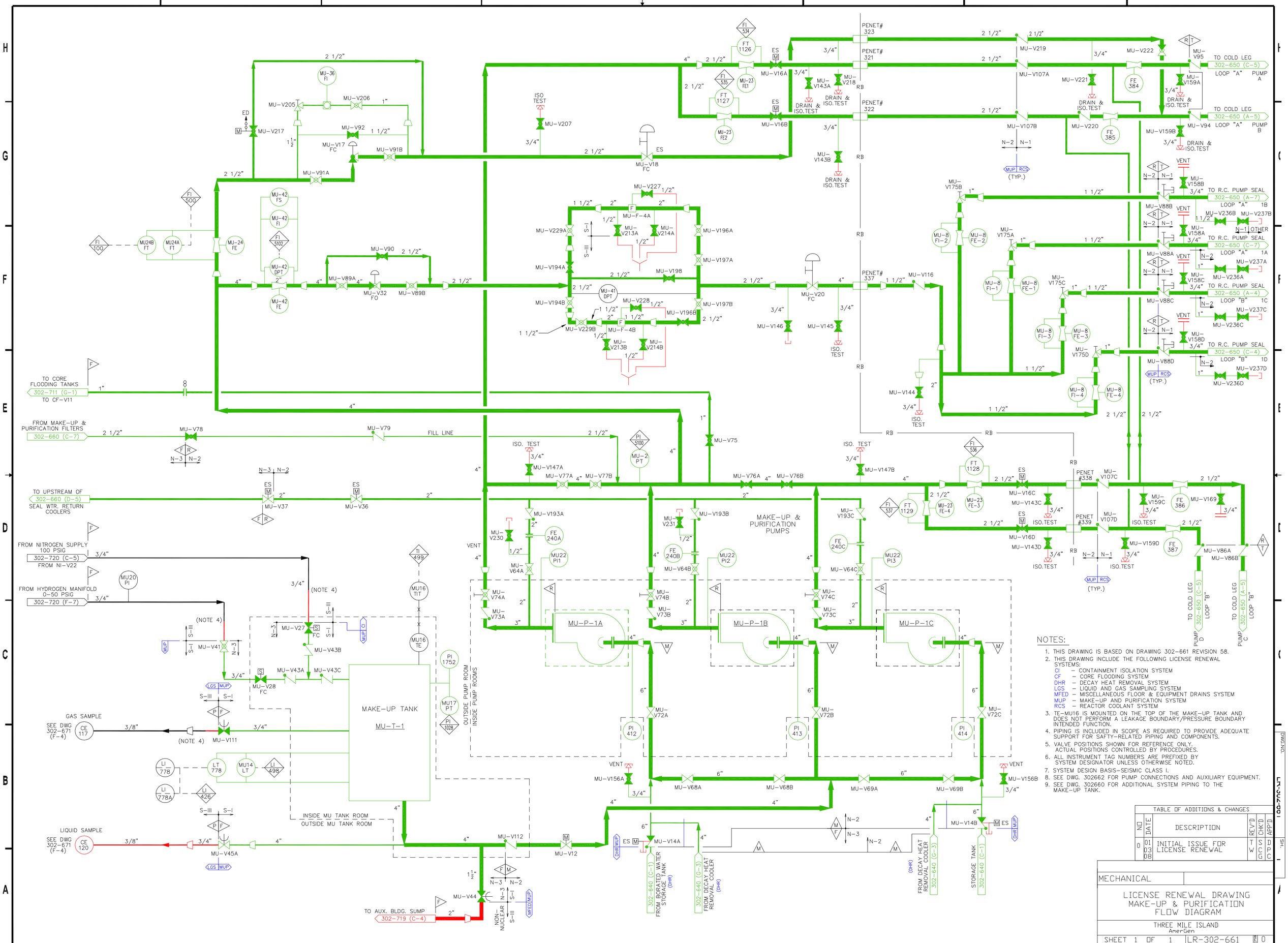

NOTES:

1. THIS DRAWING IS BASED ON DRAWING 302-661 REVISION 58.
2. THIS DRAWING INCLUDE THE FOLLOWING LICENSE RENEWAL SYSTEMS:
   - CI – CONTAINMENT ISOLATION SYSTEM
   - CF – CORE FLOODING SYSTEM
   - DHR – DECAY HEAT REMOVAL SYSTEM
   - LGS – LIQUID AND GAS SAMPLING SYSTEM
   - MFED – MISCELLANEOUS FLOOR & EQUIPMENT DRAINS SYSTEM
   - MUP – MAKE-UP AND PURIFICATION SYSTEM
   - RCS – REACTOR COOLANT SYSTEM
3. TE-MU16 IS MOUNTED ON THE TOP OF THE MAKE-UP TANK AND DOES NOT PERFORM A LEAKAGE BOUNDARY/PRESSURE BOUNDARY INTENDED FUNCTION.
4. PIPING IS INCLUDED IN SCOPE AS REQUIRED TO PROVIDE ADEQUATE SUPPORT FOR SAFTY-RELATED PIPING AND COMPONENTS.
5. VALVE POSITIONS SHOWN FOR REFERENCE ONLY. ACTUAL POSITIONS CONTROLLED BY PROCEDURES.
6. ALL INSTRUMENT TAG NUMBERS ARE PREFIXED BY SYSTEM DESIGNATOR UNLESS OTHERWISE NOTED.
7. SYSTEM DESIGN BASIS–SEISMIC CLASS I.
8. SEE DWG. 302662 FOR PUMP CONNECTIONS AND AUXILIARY EQUIPMENT.
9. SEE DWG. 302660 FOR ADDITIONAL SYSTEM PIPING TO THE MAKE-UP TANK.

TABLE OF ADDITIONS & CHANGES

NO	DATE	DESCRIPTION	REV'D	CHK'D	APP'D
0	01 03 08	INITIAL ISSUE FOR LICENSE RENEWAL	T W	S G C	D C C

MECHANICAL

LICENSE RENEWAL DRAWING
MAKE-UP & PURIFICATION
FLOW DIAGRAM

THREE MILE ISLAND
AmerGen

SHEET 1 OF 1 | LR-302-661 | REV 0

DWG NO: LR-302-661 SH 1

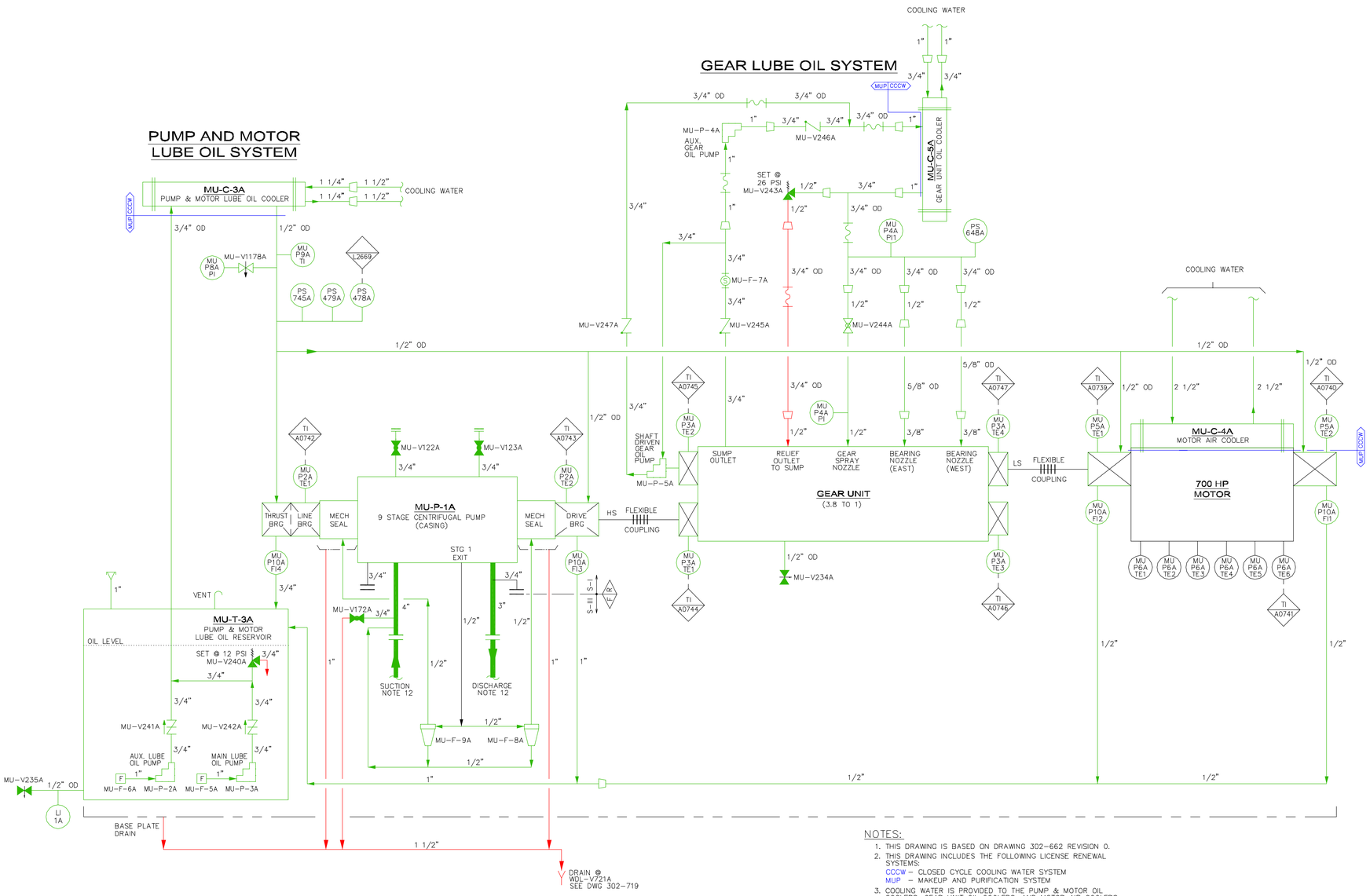

INSTRUMENT NUMBERS		
MU-P-1A	MU-P-1B	MU-P-1C
MUP2ATE1 (A0742)	MUP2BTE1 (A0751)	MUP2CTE1 (A0760)
MUP2ATE2 (A0743)	MUP2BTE2 (A0752)	MUP2CTE2 (A0761)
MUP3ATE1 (A0744)	MUP3BTE1 (A0753)	MUP3CTE1 (A0762)
MUP3ATE2 (A0745)	MUP3BTE2 (A0754)	MUP3CTE2 (A0763)
MUP3ATE.3 (A0746)	MUP3BTE3 (A0755)	MUP3CTE.3 (A0764)
MUP3ATE4 (A0747)	MUP3BTE4 (A0756)	MUP3CTE4 (A0765)
MUP5ATE1 (A0739)	MUP5BTE1 (A0748)	MUP5CTE1 (A0757)
MUP5ATE2 (A0740)	MUP5BTE2 (A0749)	MUP5CTE2 (A0758)
MUP6ATE6 (A0741)	MUP6BTE6 (A0750)	MUP6CTE6 (A0759)
MU-PS-478A (L2669)	MU-PS-478B (L2670)	MU-PS-478C (L2665)

NOTES:

1. THIS DRAWING IS BASED ON DRAWING 302-662 REVISION 0.
2. THIS DRAWING INCLUDES THE FOLLOWING LICENSE RENEWAL SYSTEMS:
   CCCW – CLOSED CYCLE COOLING WATER SYSTEM
   MUP – MAKEUP AND PURIFICATION SYSTEM
3. COOLING WATER IS PROVIDED TO THE PUMP & MOTOR OIL COOLERS, GEAR UNIT OIL COOLERS, AND MOTOR AIR COOLERS VIA THE CLOSED CYCLE COOLING WATER SYSTEM.
4. THE TUBE AND SHELL SIDES OF THE PUMP & MOTOR OIL COOLERS, GEAR UNIT OIL COOLERS, AND MOTOR AIR COOLERS ARE EVALUATED FOR AGING MANAGEMENT WITH THE CLOSED CYCLE COOLING WATER SYSTEM.
5. TEMPERATURE INDICATORS NOT INSTALLED IN THERMOWELLS ARE CONSIDERED ACTIVE INSTRUMENTS NOT SUBJECT TO AGING MANAGEMENT REVIEW.
6. TEMPERATURE ELEMENTS LOCATED IN THERMOWELLS DO NOT PERFORM A LEAKAGE BOUNDARY/PRESSURE BOUNDARY INTENDED FUNCTION.
7. COMPONENTS CONTAINED WITHIN THE TANK/RESERVIOR WILL NOT CREATE SPATIAL INTERACTIONS.
8. VALVE POSITIONS SHOWN FOR REFERENCE ONLY. ACTUAL POSITIONS CONTROLLED BY PROCEDURES.
9. ALL INSTRUMENT TAG NUMBERS ARE PREFIXED BY SYSTEM DESIGNATOR UNLESS OTHERWISE NOTED.
10. SYSTEM DESIGN BASIS–SEISMIC CLASS I.
11. PUMP MU-P-1A SHOWN, TYPICAL FOR PUMPS MU-P-1B AND 1C.
12. SEE DWG. 302-661 FOR PUMP SUCTION AND DISCHARGE CONTINUATION.

TABLE OF ADDITIONS & CHANGES

NO	DATE	DESCRIPTION	REV'D	CHK'D	APP'D
0	01 03 08	INITIAL ISSUE FOR LICENSE RENEWAL	A B	S C G	D P C

MECHANICAL

LICENSE RENEWAL DRAWING
MAKE-UP & PURIFICATION
MU PUMP AUXILIARY SYSTEMS
FLOW DIAGRAM

THREE MILE ISLAND
AmerGen

SHEET 1 OF 1 | LR-302-662 | REV 0

DWG. NO. LR-302-662 SH. 1

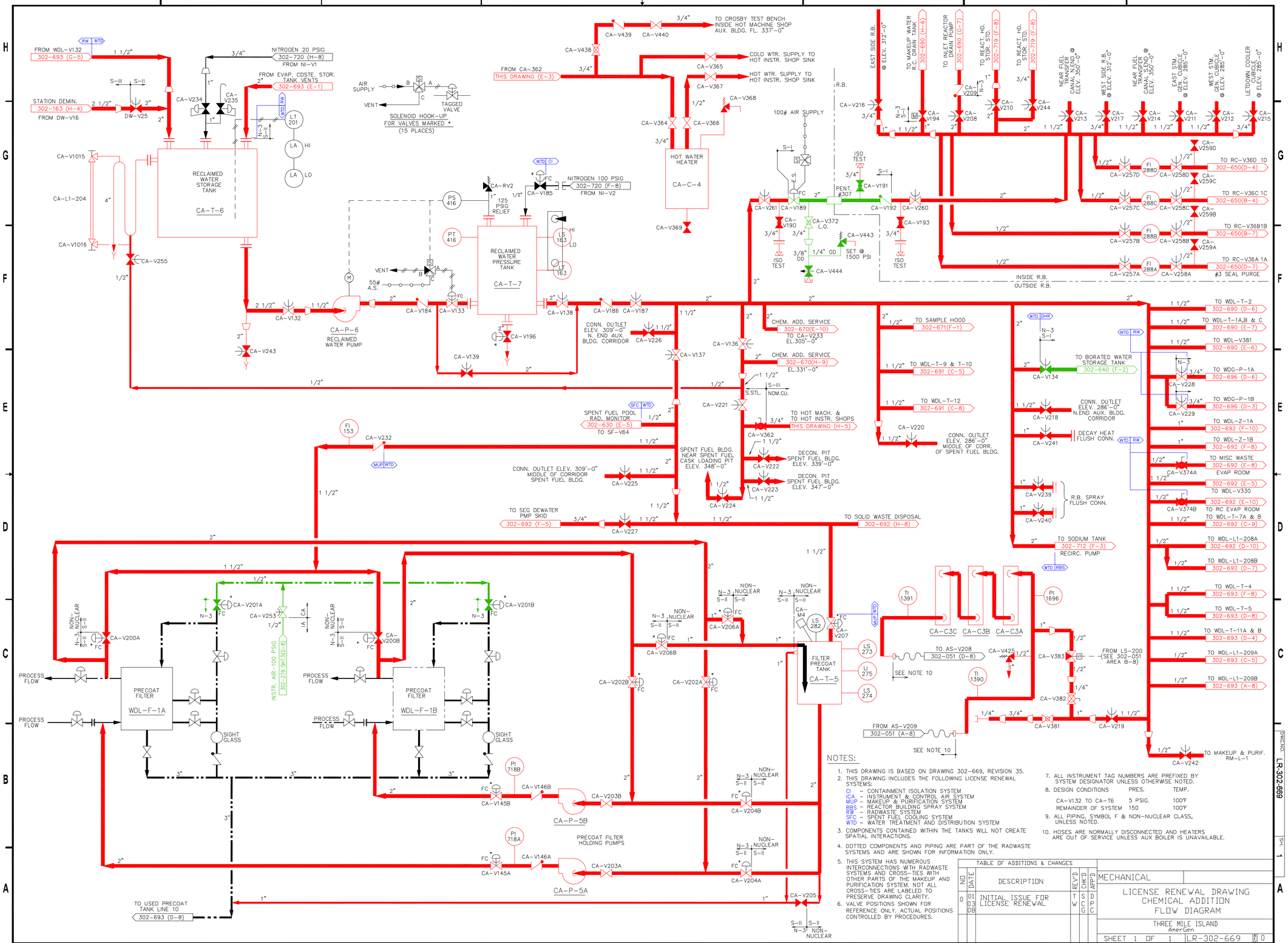

NOTES:

1. THIS DRAWING IS BASED ON DRAWING 302-669, REVISION 35.
2. THIS DRAWING INCLUDES THE FOLLOWING LICENSE RENEWAL SYSTEMS:
   - CI – CONTAINMENT ISOLATION SYSTEM
   - ICA – INSTRUMENT & CONTROL AIR SYSTEM
   - MUP – MAKEUP & PURIFICATION SYSTEM
   - RBS – REACTOR BUILDING SPRAY SYSTEM
   - RW – RADWASTE SYSTEM
   - SFC – SPENT FUEL COOLING SYSTEM
   - WTD – WATER TREATMENT AND DISTRIBUTION SYSTEM
3. COMPONENTS CONTAINED WITHIN THE TANKS WILL NOT CREATE SPATIAL INTERACTIONS.
4. DOTTED COMPONENTS AND PIPING ARE PART OF THE RADWASTE SYSTEMS AND ARE SHOWN FOR INFORMATION ONLY.
5. THIS SYSTEM HAS NUMEROUS INTERCONNECTIONS WITH RADWASTE SYSTEMS AND CROSS-TIES WITH OTHER PARTS OF THE MAKEUP AND PURIFICATION SYSTEM. NOT ALL CROSS-TIES ARE LABELED TO PRESERVE DRAWING CLARITY.
6. VALVE POSITIONS SHOWN FOR REFERENCE ONLY. ACTUAL POSITIONS CONTROLLED BY PROCEDURES.
7. ALL INSTRUMENT TAG NUMBERS ARE PREFIXED BY SYSTEM DESIGNATOR UNLESS OTHERWISE NOTED.
8. DESIGN CONDITIONS

	PRES.	TEMP.
CA-V132 TO CA-T6	5 PSIG.	100°F
REMAINDER OF SYSTEM	150	100°F

9. ALL PIPING, SYMBOL F & NON-NUCLEAR CLASS, UNLESS NOTED.
10. HOSES ARE NORMALLY DISCONNECTED AND HEATERS ARE OUT OF SERVICE UNLESS AUX BOILER IS UNAVAILABLE.

TABLE OF ADDITIONS & CHANGES

NO	DATE	DESCRIPTION	REV'D	CHK'D	APP'D
0	01 03 08	INITIAL ISSUE FOR LICENSE RENEWAL	T W	S C G	D P C

MECHANICAL

LICENSE RENEWAL DRAWING
CHEMICAL ADDITION
FLOW DIAGRAM

THREE MILE ISLAND
AmerGen

SHEET 1 OF 1 | LR-302-669 | REV 0

DWG.NO. LR-302-669 SH. 1

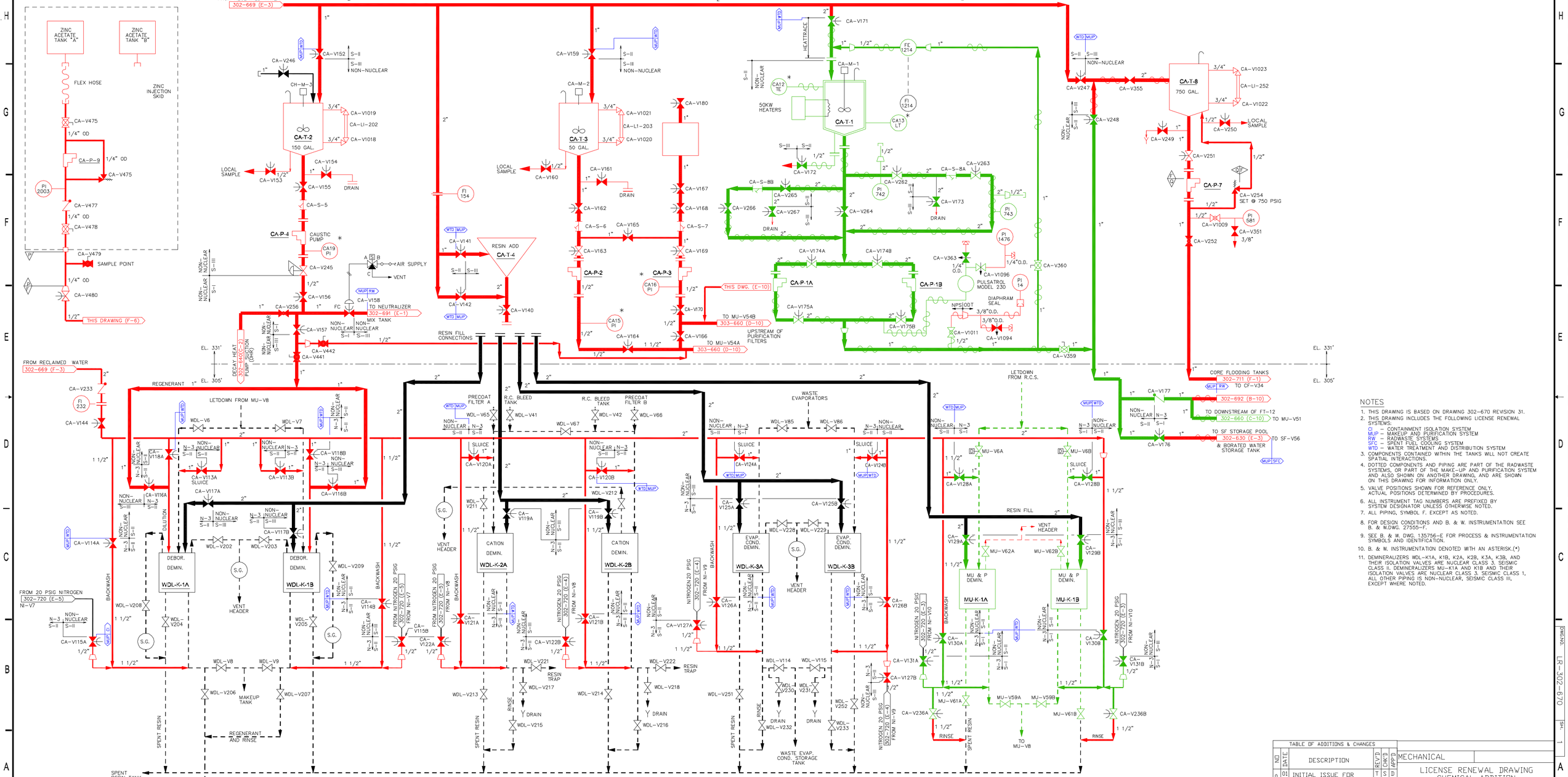

NOTES

1. THIS DRAWING IS BASED ON DRAWING 302-670 REVISION 31.
2. THIS DRAWING INCLUDES THE FOLLOWING LICENSE RENEWAL SYSTEMS:
   CI – CONTAINMENT ISOLATION SYSTEM
   MUP – MAKEUP AND PURIFICATION SYSTEM
   RW – RADWASTE SYSTEMS
   SFC – SPENT FUEL COOLING SYSTEM
   WTD – WATER TREATMENT AND DISTRIBUTION SYSTEM
3. COMPONENTS CONTAINED WITHIN THE TANKS WILL NOT CREATE SPATIAL INTERACTIONS.
4. DOTTED COMPONENTS AND PIPING ARE PART OF THE RADWASTE SYSTEMS, OR PART OF THE MAKE-UP AND PURIFICATION SYSTEM AND ALSO SHOWN ON ANOTHER DRAWING, AND ARE SHOWN ON THIS DRAWING FOR INFORMATION ONLY.
5. VALVE POSITIONS SHOWN FOR REFERENCE ONLY. ACTUAL POSITIONS DETERMINED BY PROCEDURES.
6. ALL INSTRUMENT TAG NUMBERS ARE PREFIXED BY SYSTEM DESIGNATOR UNLESS OTHERWISE NOTED.
7. ALL PIPING, SYMBOL F. EXCEPT AS NOTED.
8. FOR DESIGN CONDITIONS AND B. & W. INSTRUMENTATION SEE B. & W.DWG. 27555–F.
9. SEE B. & W. DWG. 135756–E FOR PROCESS & INSTRUMENTATION SYMBOLS AND IDENTIFICATION.
10. B. & W. INSTRUMENTATION DENOTED WITH AN ASTERISK.(*)
11. DEMINERALIZERS WDL–K1A, K1B, K2A, K2B, K3A, K3B, AND THEIR ISOLATION VALVES ARE NUCLEAR CLASS 3. SEISMIC CLASS II. DEMINERALIZERS MU–K1A AND K1B AND THEIR ISOLATION VALVES ARE NUCLEAR CLASS 3. SEISMIC CLASS 1, ALL OTHER PIPING IS NON–NUCLEAR, SEISMIC CLASS III, EXCEPT WHERE NOTED.

TABLE OF ADDITIONS & CHANGES

NO	DATE	DESCRIPTION	REV'D	CHK'D	APP'D
0	01 03 08	INITIAL ISSUE FOR LICENSE RENEWAL	TW	SCG	DPC

MECHANICAL

LICENSE RENEWAL DRAWING
CHEMICAL ADDITION
FLOW DIAGRAM

THREE MILE ISLAND
AmerGen

SHEET 1 OF 1 LR-302-670 0

DWG NO LR-302-670 SHS 1

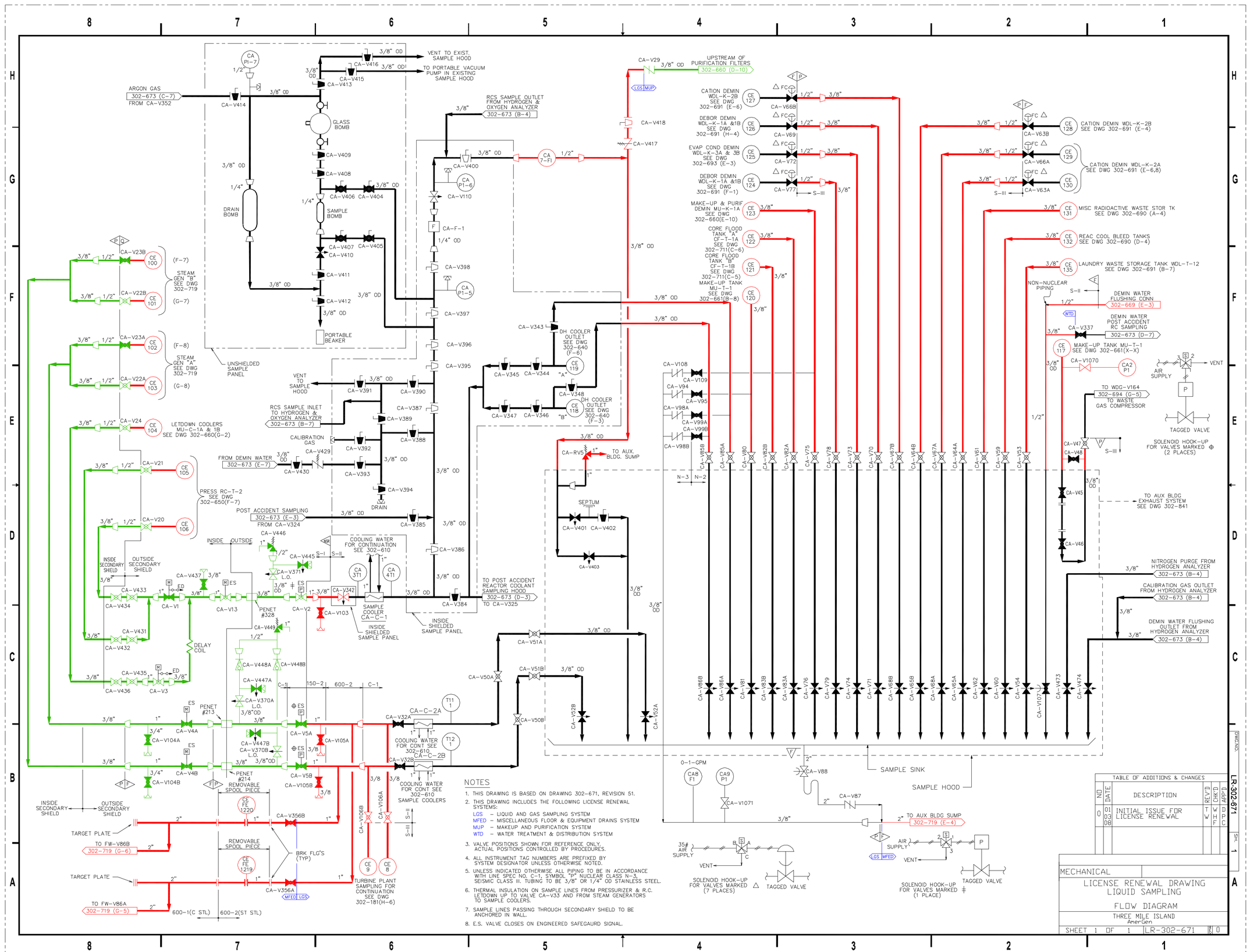

NOTES

1. THIS DRAWING IS BASED ON DRAWING 302-671, REVISION 51.
2. THIS DRAWING INCLUDES THE FOLLOWING LICENSE RENEWAL SYSTEMS:
   - LGS – LIQUID AND GAS SAMPLING SYSTEM
   - MFED – MISCELLANEOUS FLOOR & EQUIPMENT DRAINS SYSTEM
   - MUP – MAKEUP AND PURIFICATION SYSTEM
   - WTD – WATER TREATMENT & DISTRIBUTION SYSTEM
3. VALVE POSITIONS SHOWN FOR REFERENCE ONLY. ACTUAL POSITIONS CONTROLLED BY PROCEDURES.
4. ALL INSTRUMENT TAG NUMBERS ARE PREFIXED BY SYSTEM DESIGNATOR UNLESS OTHERWISE NOTED.
5. UNLESS INDICATED OTHERWISE ALL PIPING TO BE IN ACCORDANCE WITH LINE SPEC NO. C-1, SYMBOL "P" NUCLEAR CLASS N-3, SEISMIC CLASS III. TUBING TO BE 3/8" OR 1/4" OD STAINLESS STEEL.
6. THERMAL INSULATION ON SAMPLE LINES FROM PRESSURIZER & R.C. LETDOWN UP TO VALVE CA-V33 AND FROM STEAM GENERATORS TO SAMPLE COOLERS.
7. SAMPLE LINES PASSING THROUGH SECONDARY SHIELD TO BE ANCHORED IN WALL.
8. E.S. VALVE CLOSES ON ENGINEERED SAFEGAURD SIGNAL.

TABLE OF ADDITIONS & CHANGES

NO	DATE	DESCRIPTION	REV'D	CHK'D	DRFT'D
0	01 03 08	INITIAL ISSUE FOR LICENSE RENEWAL	T W	W H F	D B C

MECHANICAL

LICENSE RENEWAL DRAWING
LIQUID SAMPLING

FLOW DIAGRAM

THREE MILE ISLAND
AmerGen

SHEET 1 OF 1 | LR-302-671 | REV 0

DWG.NO. LR-302-671 SH. 1

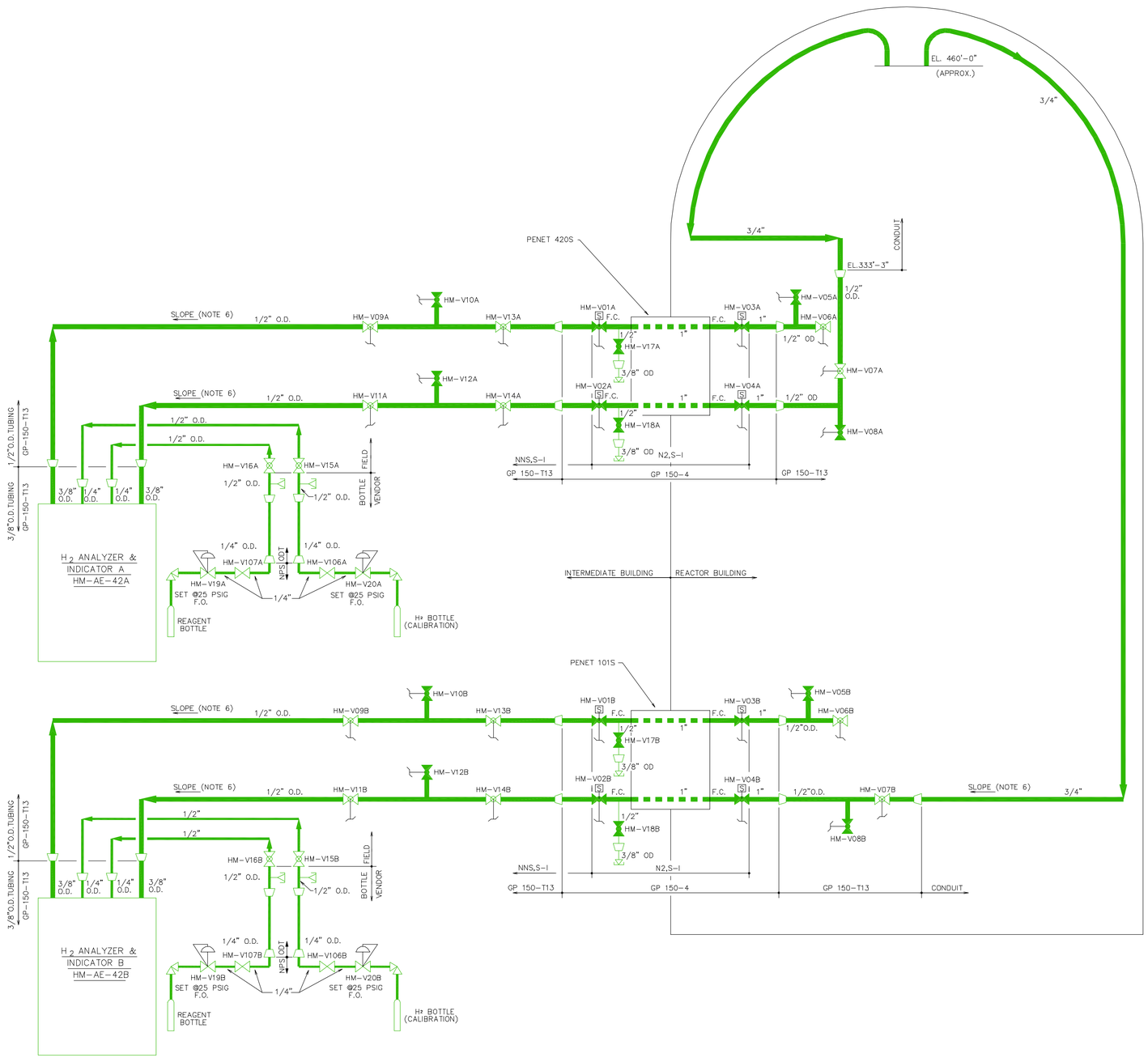

NOTES

1. THIS DRAWING IS BASED ON DRAWING 302-674 REVISION 10.
2. THIS DRAWING INCLUDES THE FOLLOWING LICENSE RENEWAL SYSTEMS:
   HM – HYDROGEN MONITORING
3. VALVE POSITIONS SHOWN FOR REFERENCE ONLY. ACTUAL POSITIONS CONTROLLED BY PROCEDURES.
4. ALL INSTRUMENT TAG NUMBERS ARE PREFIXED BY SYSTEM DESIGNATOR UNLESS OTHERWISE NOTED.
5. NO SLOPE REQ'D.ON THE WELDED PIPING ASSOCIATED WITH PENETRATIONS.
6. TUBING TO BE SLOPED 1/8" PER FOOT MINIMUM TOWARD HYDROGEN ANALYZER.
7. FLOW IN THIS DIRECTION IS OVER SEAT. FLOW IN THIS DIRECTION IS UNDER SEAT.
8. NNS IS ABBREVIATION FOR NON-NUCLEAR SERVICE.

TABLE OF ADDITIONS & CHANGES

NO	DATE	DESCRIPTION	REV'D	CHK'D	APP'D
0	01 03 08	INITIAL ISSUE FOR LICENSE RENEWAL	A B	W H F	D P C

MECHANICAL

LICENSE RENEWAL DRAWING
POST ACCIDENT MONITORING
CONTAINMENT HYDROGEN
FLOW DIAGRAM

THREE MILE ISLAND
AmerGen

SHEET 1 OF 1 | LR-302-674 | REV 0

DWG.NO. LR-302-674 SH. 1