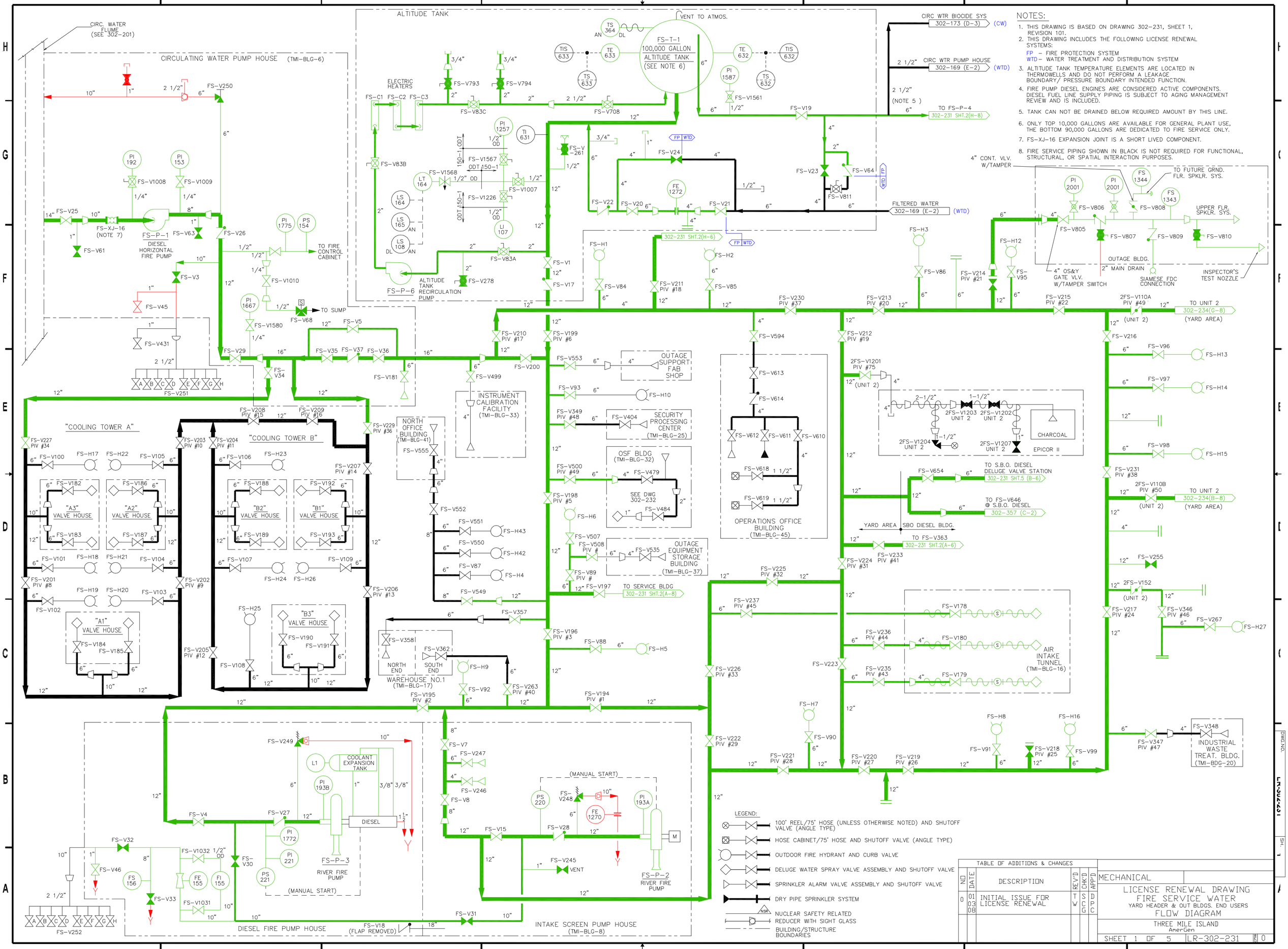

NOTES:

1. THIS DRAWING IS BASED ON DRAWING 302-231, SHEET 1, REVISION 101.
2. THIS DRAWING INCLUDES THE FOLLOWING LICENSE RENEWAL SYSTEMS:
   FP – FIRE PROTECTION SYSTEM
   WTD – WATER TREATMENT AND DISTRIBUTION SYSTEM
3. ALTITUDE TANK TEMPERATURE ELEMENTS ARE LOCATED IN THERMOWELLS AND DO NOT PERFORM A LEAKAGE BOUNDARY/ PRESSURE BOUNDARY INTENDED FUNCTION.
4. FIRE PUMP DIESEL ENGINES ARE CONSIDERED ACTIVE COMPONENTS. DIESEL FUEL LINE SUPPLY PIPING IS SUBJECT TO AGING MANAGEMENT REVIEW AND IS INCLUDED.
5. TANK CAN NOT BE DRAINED BELOW REQUIRED AMOUNT BY THIS LINE.
6. ONLY TOP 10,000 GALLONS ARE AVAILABLE FOR GENERAL PLANT USE, THE BOTTOM 90,000 GALLONS ARE DEDICATED TO FIRE SERVICE ONLY.
7. FS-XJ-16 EXPANSION JOINT IS A SHORT LIVED COMPONENT.
8. FIRE SERVICE PIPING SHOWN IN BLACK IS NOT REQUIRED FOR FUNCTIONAL, STRUCTURAL, OR SPATIAL INTERACTION PURPOSES.

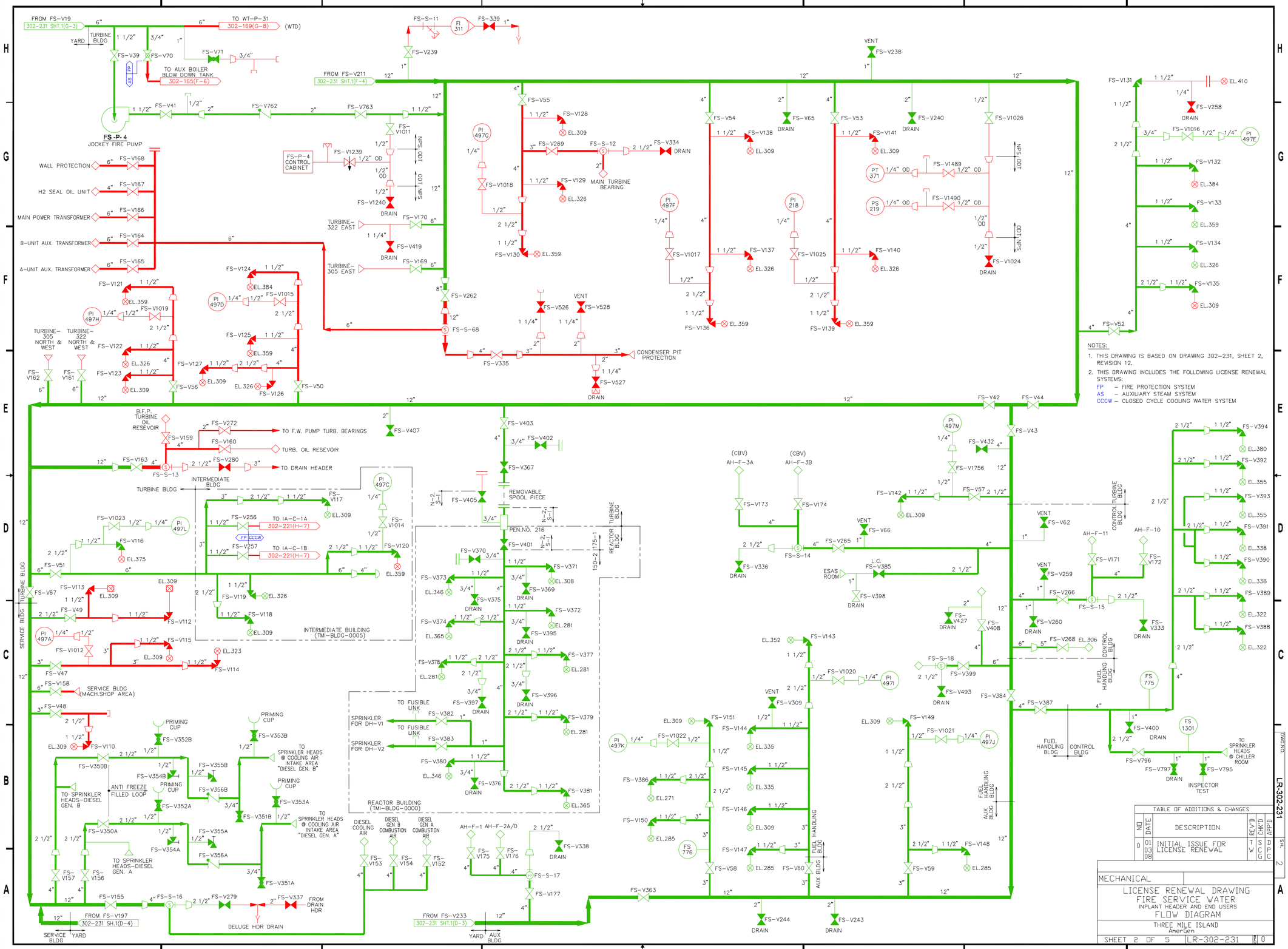

NOTES:

1. THIS DRAWING IS BASED ON DRAWING 302-231, SHEET 2, REVISION 12.
2. THIS DRAWING INCLUDES THE FOLLOWING LICENSE RENEWAL SYSTEMS:
   - FP – FIRE PROTECTION SYSTEM
   - AS – AUXILIARY STEAM SYSTEM
   - CCCW – CLOSED CYCLE COOLING WATER SYSTEM

TABLE OF ADDITIONS & CHANGES

NO	DATE	DESCRIPTION	REV'D	CHK'D	DRFT'D
0	01 03 08	INITIAL ISSUE FOR LICENSE RENEWAL	T W	S C G	D P C

MECHANICAL

LICENSE RENEWAL DRAWING
FIRE SERVICE WATER
INPLANT HEADER AND END USERS
FLOW DIAGRAM

THREE MILE ISLAND
AmerGen

SHEET 2 OF 5 | LR-302-231 | REV. 0

DWG.NO. LR-302-231 SH. 2

FIRE SERVICE WATER TRIM VALVE AND INSTRUMENT DATA

PROCESS VALVE NUMBER	DELUGE VALVE NUMBER	TRIM VALVE NUMBERS																	P.I. NUMBERS			P.S. NUMBERS			STRAINER NUMBERS
		A	B	C	D	E	F	G	H	I	J	K	L	M	N	O	P	Q	A	B	C	A	B	C	
FS-V182	FS-V728	FS-V1644	FS-V1301	FS-V1046	FS-V1041	FS-V1047	FS-V1044	FS-V1645	FS-V1646	FS-V1416	FS-V1299	FS-V1647	FS-V1300	FS-V1648	FS-V1649	FS-V1465	FS-V1466	FS-V1453	500B	502B	501B	DG1-1-2A	579B	582B	39
FS-V183	FS-V729	FS-V1650	FS-V1304	FS-V1042	FS-V1043	FS-V1045	FS-V1040	FS-V1651	FS-V1652	FS-V1417	FS-V1302	FS-V1653	FS-V1303	FS-V1654	FS-V1655	FS-V1467	FS-V1468	FS-V1454	500A	502A	501A	DG1-1-1A	579A	582A	40
FS-V184	FS-V730	FS-V1656	FS-V1307	FS-V1050	FS-V1051	FS-V1049	FS-V1048	FS-V1657	FS-V1658	FS-V1418	FS-V1305	FS-V1659	FS-V1306	FS-V1660	FS-V1661	FS-V1469	FS-V1470	FS-V1455	500C	502C	501C	DG1-1-3A	579C	582C	41
FS-V185	FS-V731	FS-V1662	FS-V1310	FS-V1054	FS-V1055	FS-V1053	FS-V1052	FS-V1663	FS-V1664	FS-V1419	FS-V1308	FS-V1665	FS-V1309	FS-V1666	FS-V1667	FS-V1471	FS-V1472	FS-V1456	500D	502D	501D	DG1-1-4A	579D	582D	42
FS-V186	FS-V732	FS-V1668	FS-V1313	FS-V1058	FS-V1059	FS-V1057	FS-V1056	FS-V1669	FS-V1670	FS-V1420	FS-V1311	FS-V1671	FS-V1312	FS-V1672	FS-V1673	FS-V1473	FS-V1474	FS-V1457	500E	502E	501E	DG1-1-5A	579E	582E	43
FS-V187	FS-V733	FS-V1674	FS-V1316	FS-V1062	FS-V1063	FS-V1061	FS-V1060	FS-V1675	FS-V1676	FS-V1421	FS-V1314	FS-V1677	FS-V1315	FS-V1678	FS-V1679	FS-V1475	FS-V1476	FS-V1458	500F	502F	501F	DG1-1-6A	579F	582F	44
FS-V188	FS-V734	FS-V1680	FS-V1066	FS-V1067	FS-V1319	FS-V1065	FS-V1064	FS-V1681	FS-V1682	FS-V1422	FS-V1317	FS-V1683	FS-V1318	FS-V1684	FS-V1685	FS-V1477	FS-V1478	FS-V1459	503E	505E	504E	DG1-1-5B	580E	583E	45
FS-V189	FS-V735	FS-V1686	FS-V1070	FS-V1071	FS-V1322	FS-V1069	FS-V1068	FS-V1687	FS-V1688	FS-V1423	FS-V1320	FS-V1689	FS-V1321	FS-V1690	FS-V1691	FS-V1479	FS-V1480	FS-V1460	503F	505F	504F	DG1-1-6B	580F	583F	46
FS-V190	FS-V736	FS-V1692	FS-V1074	FS-V1075	FS-V1325	FS-V1073	FS-V1072	FS-V1693	FS-V1694	FS-V1424	FS-V1323	FS-V1695	FS-V1324	FS-V1696	FS-V1697	FS-V1481	FS-V1482	FS-V1461	503B	505B	504B	DG1-1-2B	580B	583B	47
FS-V191	FS-V737	FS-V1698	FS-V1078	FS-V1079	FS-V1328	FS-V1077	FS-V1076	FS-V1699	FS-V1700	FS-V1425	FS-V1326	FS-V1701	FS-V1327	FS-V1702	FS-V1703	FS-V1483	FS-V1484	FS-V1462	503A	505A	504A	DG1-1-1B	580A	583A	48
FS-V192	FS-V738	FS-V1704	FS-V1082	FS-V1083	FS-V1331	FS-V1081	FS-V1080	FS-V1705	FS-V1706	FS-V1426	FS-V1329	FS-V1707	FS-V1330	FS-V1708	FS-V1709	FS-V1485	FS-V1486	FS-V1463	503C	505C	504C	DG1-1-3B	580C	583C	49
FS-V193	FS-V739	FS-V1710	FS-V1086	FS-V1087	FS-V1334	FS-V1085	FS-V1084	FS-V1711	FS-V1712	FS-V1427	FS-V1332	FS-V1713	FS-V1333	FS-V1714	FS-V1715	FS-V1487	FS-V1488	FS-V1464	503D	505D	504D	DG1-1-4B	580D	583D	50

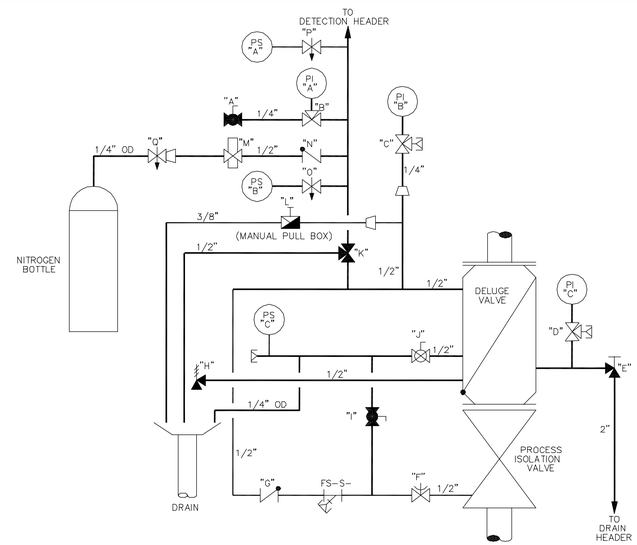

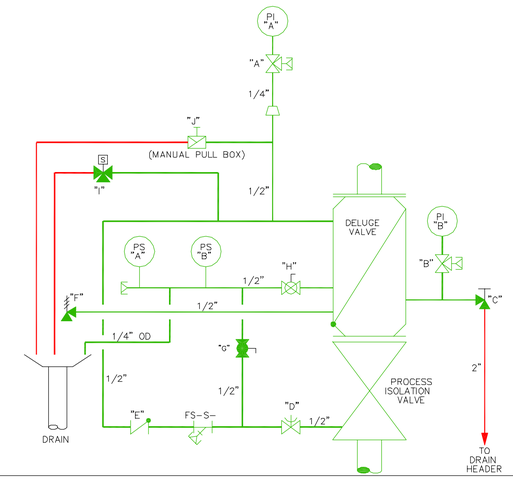

FIRE SERVICE WATER TRIM VALVE AND INSTRUMENT DATA

PROCESS VALVE NUMBER	DELUGE VALVE NUMBER	TRIM VALVE NUMBERS										P.I. NUMBERS		P.S. NUMBERS		STRAINER NUMBERS
		A	B	C	D	E	F	G	H	I	J	A	B	A	B	
FS-V152	FS-V800	FS-V1099	FS-V1100	FS-V1098	FS-V1097	FS-V678	FS-V1585	FS-V1389	FS-V1264	FS-V1586	FS-V1265	513D	513C	507A	507B	19
FS-V153	FS-V709	FS-V1103	FS-V1104	FS-V1102	FS-V1101	FS-V677	FS-V1588	FS-V1390	FS-V1267	FS-V1589	FS-V1268	513E	513A	507C	507D	20
FS-V154	FS-V710	FS-V1107	FS-V1108	FS-V1106	FS-V1105	FS-V676	FS-V1591	FS-V1391	FS-V1270	FS-V1592	FS-V1271	513F	513B	507E	507F	21
FS-V159	FS-V711	FS-V1120	FS-V1121	FS-V1119	FS-V1118	FS-V1593	FS-V1594	FS-V1402	FS-V1242	FS-V1595	FS-V1241	510D	510C	500B	500A	22
FS-V160	FS-V712	FS-V1128	FS-V1129	FS-V1127	FS-V1126	FS-V1596	FS-V1598	FS-V1403	FS-V1244	FS-V1598	FS-V1243	510B	510A	501B	501A	23
FS-V164	FS-V713	FS-V1138	FS-V1139	FS-V1137	FS-V1136	FS-V1599	FS-V1600	FS-V1406	FS-V1247	FS-V1601	FS-V1248	511B	511G	503B	503A	24
FS-V165	FS-V714	FS-V1142	FS-V1143	FS-V1141	FS-V1140	FS-V1602	FS-V1603	FS-V1407	FS-V1249	FS-V1604	FS-V1250	511A	511F	502B	502A	25
FS-V166	FS-V715	FS-V1146	FS-V1147	FS-V1145	FS-V1144	FS-V1605	FS-V1606	FS-V1408	FS-V1251	FS-V1607	FS-V1252	511C	511H	504B	504A	26
FS-V167	FS-V716	FS-V1150	FS-V1151	FS-V1149	FS-V1148	FS-V1608	FS-V1609	FS-V1409	FS-V1253	FS-V1610	FS-V1254	511D	511I	505B	505A	27
FS-V168	FS-V717	FS-V1154	FS-V1155	FS-V1153	FS-V1152	FS-V1611	FS-V1612	FS-V1410	FS-V1255	FS-V1613	FS-V1256	511E	511J	506B	506A	28
FS-V171	FS-V718	FS-V1179	FS-V1180	FS-V1182	FS-V1181	FS-V1614	FS-V1615	FS-V1397	FS-V1281	FS-V1616	FS-V1282	515H	515D	509G	509H	29
FS-V172	FS-V719	FS-V1183	FS-V1184	FS-V1178	FS-V1177	FS-V1617	FS-V1618	FS-V1398	FS-V1283	FS-V1619	FS-V1284	515G	515C	509E	509F	30
FS-V173	FS-V720	FS-V1171	FS-V1172	FS-V1170	FS-V1169	FS-V1620	SEE NOTE 2	FS-V1399	FS-V1285	FS-V1622	FS-V1286	515E	515A	509A	509B	31
FS-V174	FS-V721	FS-V1175	FS-V1176	FS-V1174	FS-V1173	FS-V1623	SEE NOTE 2	FS-V1400	FS-V1287	FS-V1625	FS-V1288	515F	515B	509C	509D	32
FS-V175	FS-V722	FS-V1191	FS-V1192	FS-V1190	FS-V1189	FS-V695	FS-V1627	FS-V1414	FS-V1277	FS-V1628	FS-V1278	517D	517B	510C	510D	33
FS-V176	FS-V723	FS-V1187	FS-V1188	FS-V1186	FS-V1185	FS-V694	FS-V1630	FS-V1415	FS-V1279	FS-V1631	FS-V1280	517C	517A	510A	510B	34
FS-V178	FS-V724	FS-V1196	FS-V1195	FS-V1194	FS-V1193	FS-V700	FS-V1633	FS-V1386	FS-V1335	FS-V1634	FS-V1336	514F	514C	508E	508F	35
FS-V179	FS-V725	FS-V1200	FS-V1199	FS-V1198	FS-V1197	FS-V699	FS-V1636	FS-V1387	FS-V1337	FS-V1637	FS-V1338	514E	514B	508D	508C	36
FS-V180	FS-V726	FS-V1204	FS-V1203	FS-V1202	FS-V1201	FS-V698	FS-V1639	FS-V1388	FS-V1339	FS-V1640	FS-V1340	514D	514A	508B	508A	37

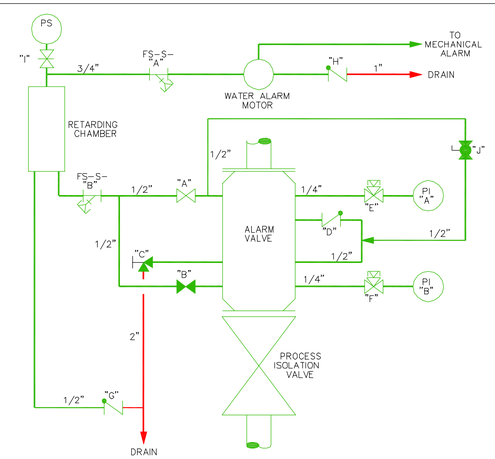

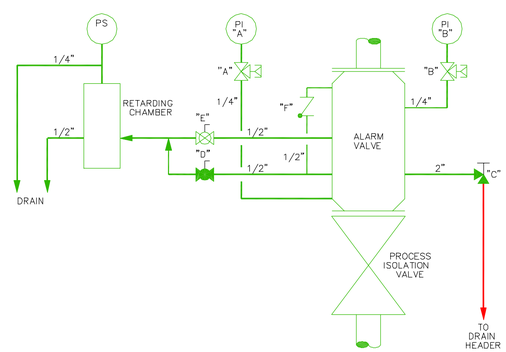

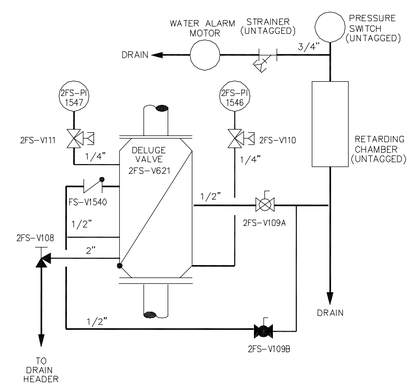

FIRE SERVICE WATER TRIM VALVE AND INSTRUMENT DATA

PROCESS VALVE NUMBER	ALARM VALVE NUMBER	TRIM VALVE NUMBERS						P.I. NUMBERS		P.S. NUMBER	RETARDING CHAMBER NUMBER
		A	B	C	D	E	F	A	B		
FS-V156	FS-V743	FS-V1110	FS-V1111	FS-V1109	FS-V1392	FS-V1273	FS-V675	512A	512B	160I	FS-T-12
FS-V157	FS-V744	FS-V1113	FS-V1114	FS-V1112	FS-V1393	FS-V1275	FS-V674	512C	512D	160J	FS-T-13
FS-V158	FS-V745	FS-V1117	FS-V1116	FS-V1115	FS-V1413	FS-V1276	FS-V673	512E	512F	160H	FS-T-14
FS-V161	FS-V746	FS-V1131	FS-V1132	FS-V1130	FS-V1404	FS-V1245	N/A	509G	509H	160D	FS-T-15
FS-V162	FS-V747	FS-V1134	FS-V1135	FS-V1133	FS-V1405	FS-V1246	N/A	509E	509F	160C	FS-T-16
FS-V169	FS-V748	FS-V1160	FS-V1161	FS-V1159	FS-V1411	FS-V1257	N/A	509A	509B	160B	FS-T-17
FS-V170	FS-V749	FS-V1157	FS-V1158	FS-V1156	FS-V1412	FS-V1258	N/A	509C	509D	160A	FS-T-18
FS-V181	FS-V750	FS-V1089	FS-V1090	FS-V1088	FS-V1394	FS-V1230	FS-V765	520A	520B	160G	FS-T-19
FS-V268	FS-V751	FS-V1168	FS-V1167	FS-V1166	FS-V1401	FS-V1225	FS-V683	516B	516A	160N	FS-T-20
FS-V358	FS-V752	FS-V1352	FS-V1351	FS-V359	FS-V1431	FS-V1350	FS-V684	1665	1666	1438	FS-T-21
FS-V246	FS-V753	FS-V1093	FS-V1092	FS-V1091	FS-V1395	FS-V1237	FS-V766	502	501	160F	FS-T-22
FS-V247	FS-V754	FS-V1096	FS-V1095	FS-V1094	FS-V1396	FS-V1238	FS-V767	504	503	160E	FS-T-23
2FS-V626	2FS-V625	2FS-V1544	2FS-V1543	2FS-V629	2FS-V1801A	2FS-V1801B	2FS-V1545	1542*	1543*	1519*	2FS-T-5

*-DENOTES A UNIT 2 NUMBER

FIRE SERVICE WATER TRIM VALVE AND INSTRUMENT DATA

PROCESS VALVE NUMBER	ALARM VALVE NUMBER	TRIM VALVE NUMBERS												P.S. NUMBER	STRAINER NO.		RETARDING CHAMBER NUMBER
		A	B	C	D	E	F	G	H	I	J	A	B		A	B	
FS-V555	FS-V581	FS-V585	FS-V584	FS-V588	FS-V586	FS-V582	FS-V583	FS-V587	FS-V579	N/A	N/A	1456	1457	1461	54	55	FS-T-5
FS-V404	FS-V704	FS-V1370	FS-V1371	FS-V1222	N/A	FS-V1373	FS-V1372	FS-V686	FS-V685	N/A	N/A	1657	1658	1672	N/A	N/A	FS-T-6
FS-V499	FS-V498	FS-V1445	FS-V1444	FS-V1448	FS-V1739	FS-V1446	FS-V1447	N/A	N/A	N/A	N/A	1357	1358	1668	56	57	FS-T-7
FS-V348	FS-V705	FS-V1379	FS-V1378	FS-V1375	FS-V1740	FS-V1377	FS-V1376	FS-V1741	N/A	N/A	N/A	1664	1663	903	58	N/A	FS-T-8
FS-V553	FS-V589	FS-V591	FS-V592	FS-V590	FS-V679	FS-V589	FS-V1570	N/A	N/A	N/A	N/A	1465	1464	1221	N/A	59	FS-T-9
FS-V612	FS-V706	FS-V1511	FS-V1512	FS-V621	FS-V1493	FS-V1513	FS-V1514	N/A	FS-V1515	FS-V1770	N/A	1525	1526	1514	60	61	FS-T-10
N/A	FS-V408	FS-V430	N/A	FS-V429	FS-V693	FS-V1298	FS-V1297	N/A	N/A	N/A	N/A	1659	1660	1246	N/A	62	FS-T-11
2FS-V1206	2FS-V1205	2FS-V301	N/A	2FS-V302	2FS-V1208	2FS-V1209	2FS-V1210	N/A	N/A	N/A	2FS-V300	6051*	6052*	6050*	1*	2*	2FS-T-3
2FS-V1061	2FS-V1060	2FS-V1802B	2FS-V1802A	2FS-V624	2FS-V1064	2FS-V1531	2FS-V1532	2FS-V1063	N/A	N/A	N/A	1545*	1544*	N/A	N/A	N/A	2FS-T-4
FS-V535	FS-V540	FS-V538	FS-V534	FS-V530	FS-V532	FS-V533	FS-V531	FS-V537	N/A	N/A	N/A	1366	1365	1369	N/A	6	FS-T-28

*-DENOTES A UNIT 2 NUMBER

NOTES

1. THIS DRAWING IS BASED ON DRAWING 302-231, SHEET 3, REVISION 13.
2. THIS DRAWING INCLUDES THE FOLLOWING LICENSE RENEWAL SYSTEMS:
   FP- FIRE PROTECTION SYSTEM

TABLE OF ADDITIONS & CHANGES

NO	DATE	DESCRIPTION	REV'D	CHK'D
0	01 03 08	INITIAL ISSUE FOR LICENSE RENEWAL	TW	SCG

DWG.NO. LR-302-231 SH. 3

MECHANICAL

LICENSE RENEWAL DRAWING
FIRE SERVICE WATER
DELUGE AND ALARM VALVE SCHEMATIC DETAILS
FLOW DIAGRAM

THREE MILE ISLAND
AmerGen

SHEET 3 OF 5 LR-302-231 REV 0

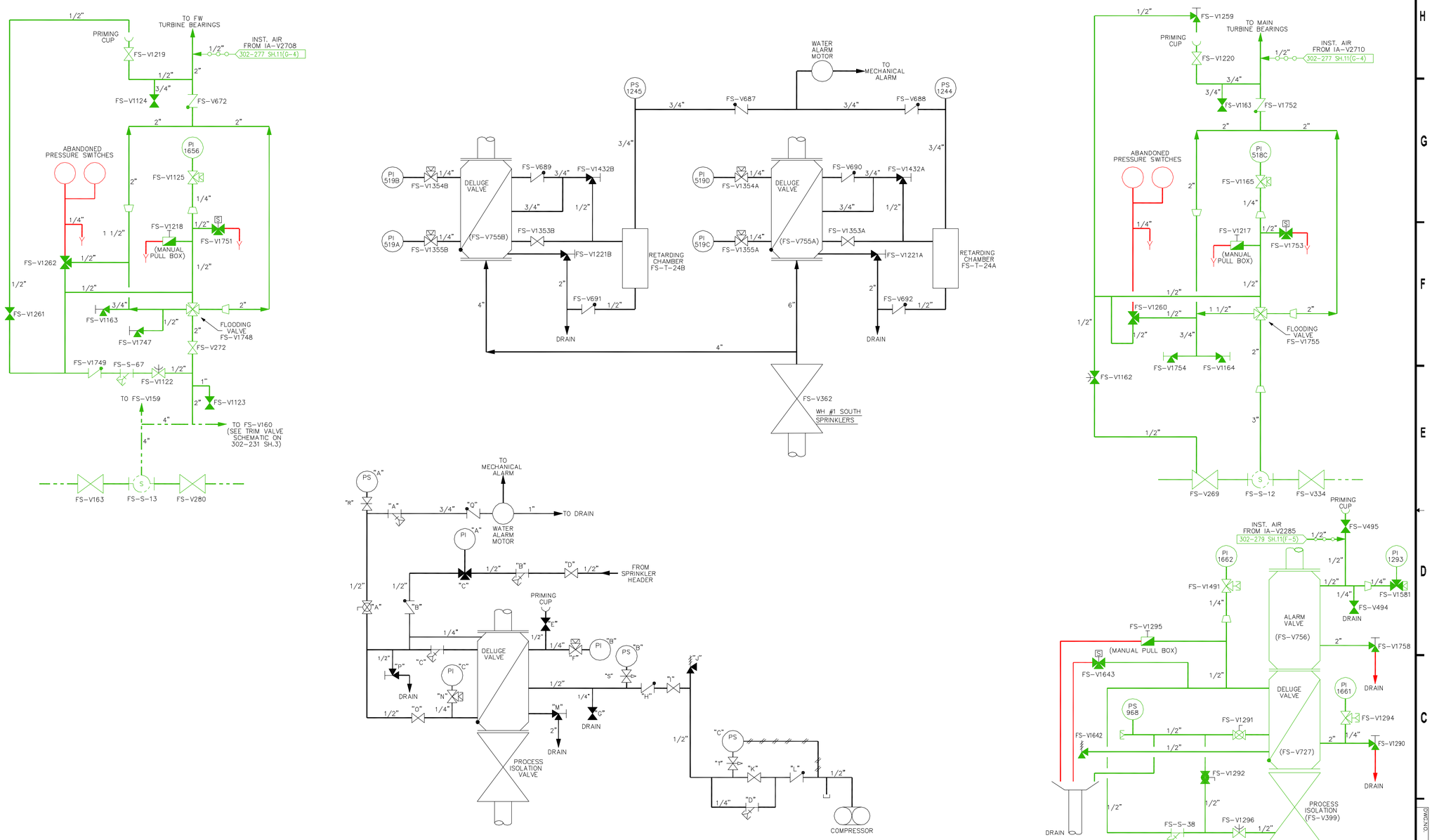

FIRE SERVICE WATER TRIM VALVE AND INSTRUMENT DATA

PROCESS VALVE NUMBER	DELUGE VALVE NUMBER	TRIM VALVE NUMBERS																				P.I. NUMBERS			P.S. NUMBERS			STRAINER NUMBERS				COMPRESSOR NUMBERS
		A	B	C	D	E	F	G	H	I	J	K	L	M	N	O	P	Q	R	S	T	A	B	C	A	B	C	A	B	C	D	
FS-V611	FS-V707	FS-V1504	N/A	N/A	N/A	FS-V1502	FS-V1506	FS-V1503	FS-V1510	FS-V1509	FS-V1501	N/A	N/A	FS-V620	FS-V1507	FS-V1505	N/A	FS-V1508	FS-V1769	FS-V1771	FS-V1772	N/A	1523	1524	1513	1515	1516	N/A	N/A	FS-S-65	FS-S-66	FS-P-11
N/A	FS-V522	FS-V520	N/A	N/A	N/A	FS-V512	FS-V513	FS-V519	FS-V518	FS-V517	FS-V524	FS-V529	N/A	FS-V512	FS-V515	FS-V516	FS-V521	N/A	N/A	N/A	N/A	N/A	1359	1360	1364	1363	1362	N/A	N/A	FS-S-3	FS-S-5	FS-P-9

NOTES:

1. THIS DRAWING IS BASE ON DRAWING 302-231, SHEET4, REVISION 6.
2. THIS DRAWING INCLUDES THE FOLLOWING LICENSE RENEWAL SYSTEMS:
   FP – FIRE PROTECTION SYSTEM

TABLE OF ADDITIONS & CHANGES

NO	DATE	DESCRIPTION	REV'D	CHK'D	APP'D
0	01 03 08	INITIAL ISSUE FOR LICENSE RENEWAL	TW	SCG	DPC

MECHANICAL

LICENSE RENEWAL DRAWING
FIRE SERVICE WATER
MISC. SCHEMATIC DETAILS
FLOW DIAGRAM

THREE MILE ISLAND
AmerGen

SHEET 4 OF 5 | LR-302-231 | REV 0

DWG.NO. LR-302-231 SH. 4

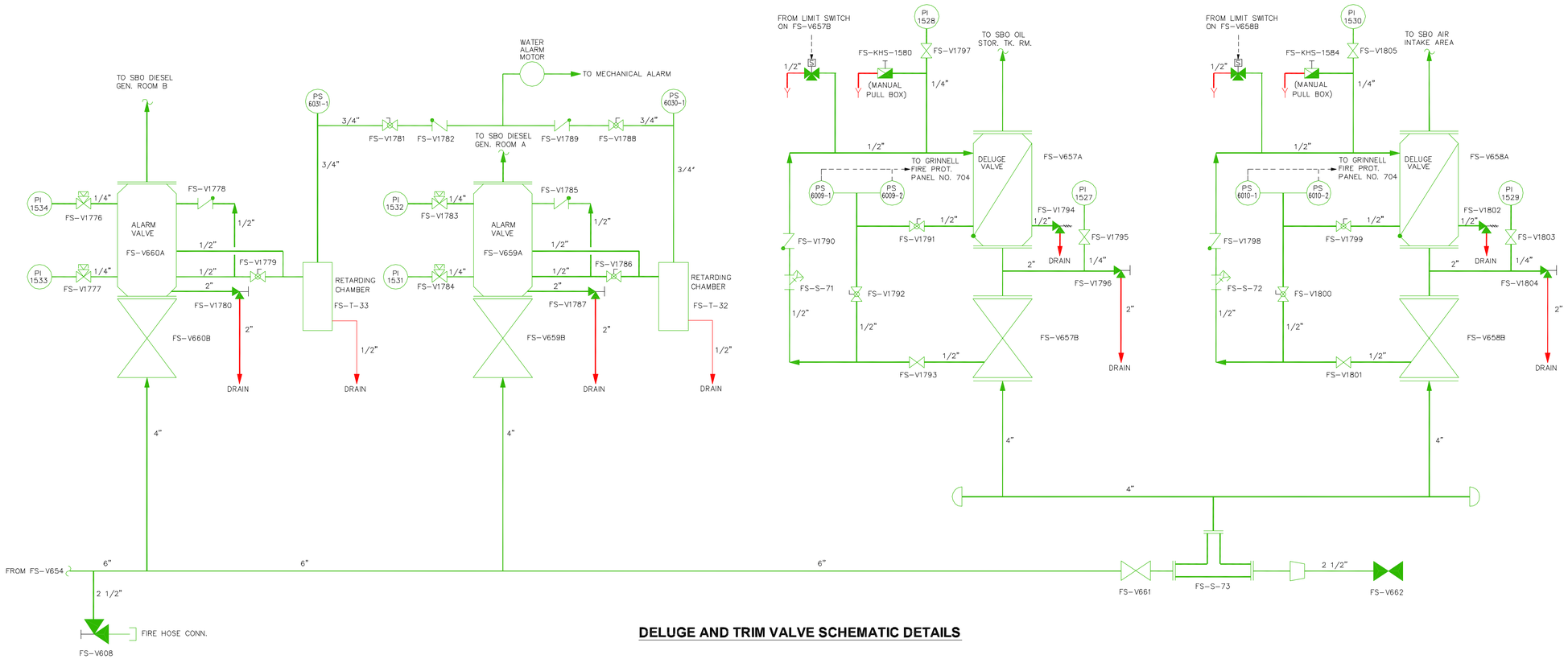

DELUGE AND TRIM VALVE SCHEMATIC DETAILS

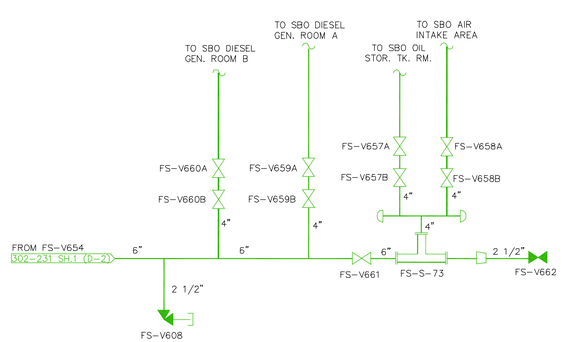

FLOW DIAGRAM

NOTES:

1. THIS DRAWING IS BASED ON DRAWING 302-231, SHEET 5, REVISION 1.
2. THIS DRAWING INCLUDES THE FOLLOWING LICENSE RENEWAL SYSTEMS:
   FP – FIRE PROTECTION SYSTEM

TABLE OF ADDITIONS & CHANGES

NO	DATE	DESCRIPTION	REV'D	CHK'D	APP'D
0	01 03 08	INITIAL ISSUE FOR LICENSE RENEWAL	T W	S C G	D P C

MECHANICAL

LICENSE RENEWAL DRAWING
FIRE SERVICE WATER
SBO DIESEL GEN BLDG DELUGE AND TRIM VALVE SCHEMATIC DETAILS
FLOW DIAGRAM

THREE MILE ISLAND
AmerGen

SHEET 5 OF 5 | LR-302-231 | REV 0

DWG.NO. LR-302-231 SH. 5

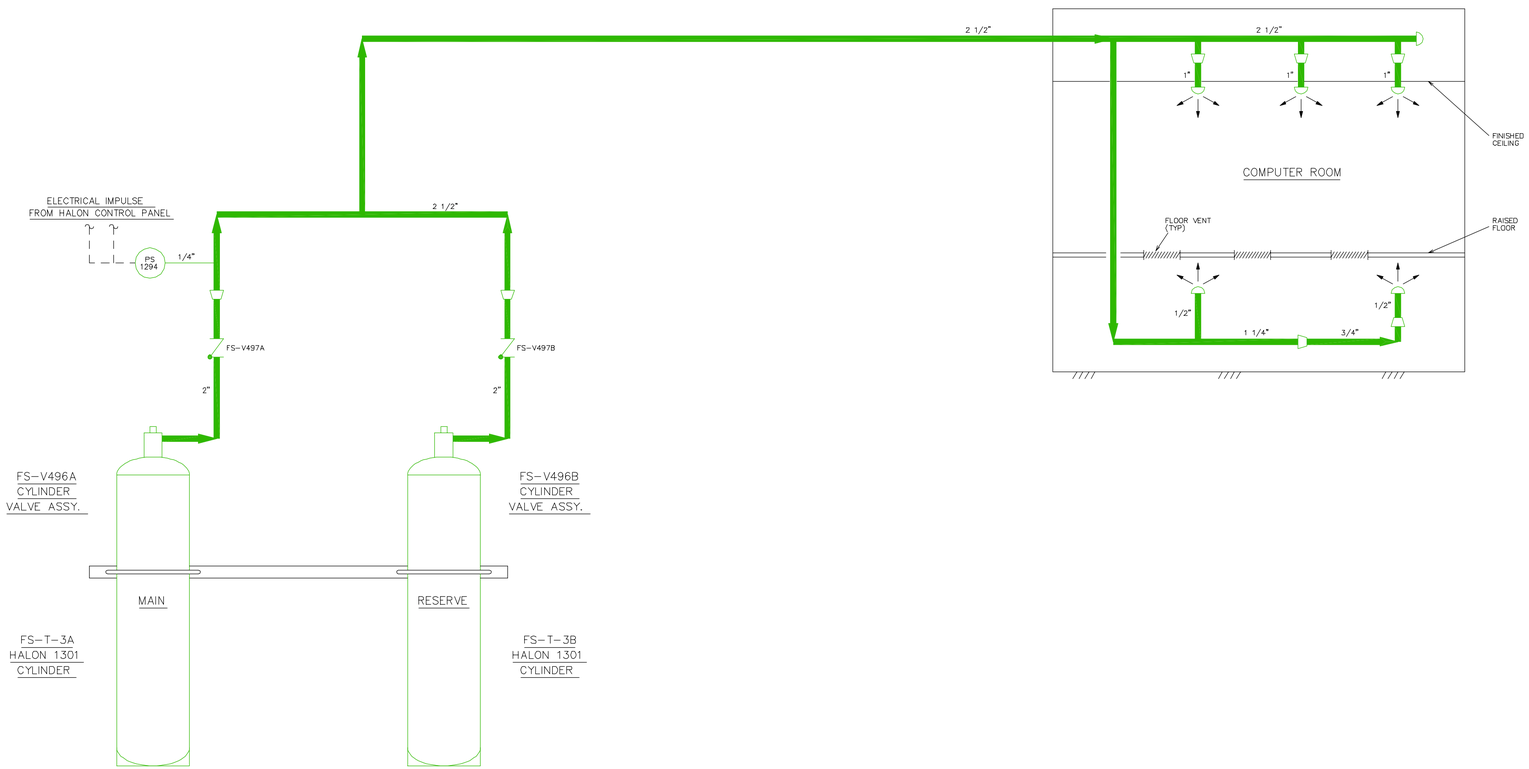

NOTES:

1. THIS DRAWING IS BASED N DRAWING 302-233, REVISION 1.
2. THIS DRAWING INCLUDES THE FOLLOWING LICENSE RENEWAL SYSTEMS:
   FP - FIRE PROTECTION SYSTEM

TABLE OF ADDITIONS & CHANGES

NO	DATE	DESCRIPTION	REV'D	CHK'D	APP'D
0	01 03 08	INITIAL ISSUE FOR LICENSE RENEWAL	T W	S C G	D P C

MECHANICAL

LICENSE RENEWAL DRAWING
FIRE PROT. - HALON SYS.
OPERATIONS SUPPORT FACILITY
FLOW DIAGRAM

THREE MILE ISLAND
AmerGen

SHEET 1 OF 1 | LR-302-233 | REV 0

DWG.NO. LR-302-233 SH. 1

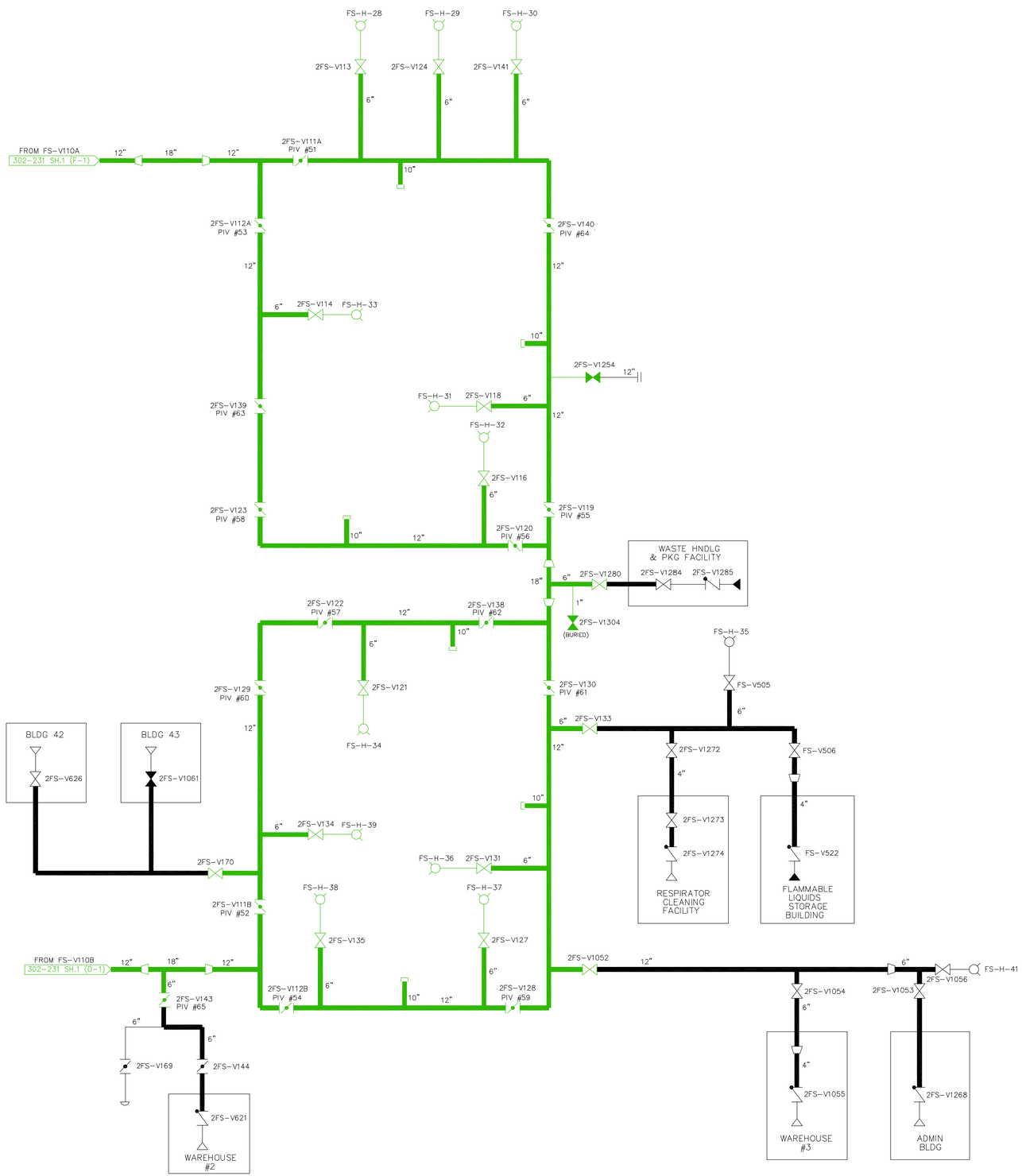

NOTES

1. THIS DRAWING IS BASED ON DRAWING 302-234, REVISION 10.
2. THIS DRAWING INCLUDES THE FOLLOWING LICENSE RENEWAL SYSTEMS:
   FP – FIRE PROTECTION SYSTEM
3. FIRE SERVICE PIPING SHOWN IN BLACK IS NOT REQUIRED FOR FUNCTIONAL, STRUCTURAL, OR SPATIAL INTERACTION PURPOSES.

TABLE OF ADDITIONS & CHANGES

NO	DATE	DESCRIPTION	REV'D	CHK'D	APP'D
0	01 03 03	INITIAL ISSUE FOR LICENSE RENEWAL	T W	S C G	D P C

MECHANICAL

LICENSE RENEWAL DRAWING
FIRE SERVICE WATER
UNIT II HEADERS (YARD AREA)
FLOW DIAGRAM

THREE MILE ISLAND
AmerGen

SHEET 1 OF 1 | LR-302-234 | REV 0

DWG.NO. LR-302-234 SH. 1

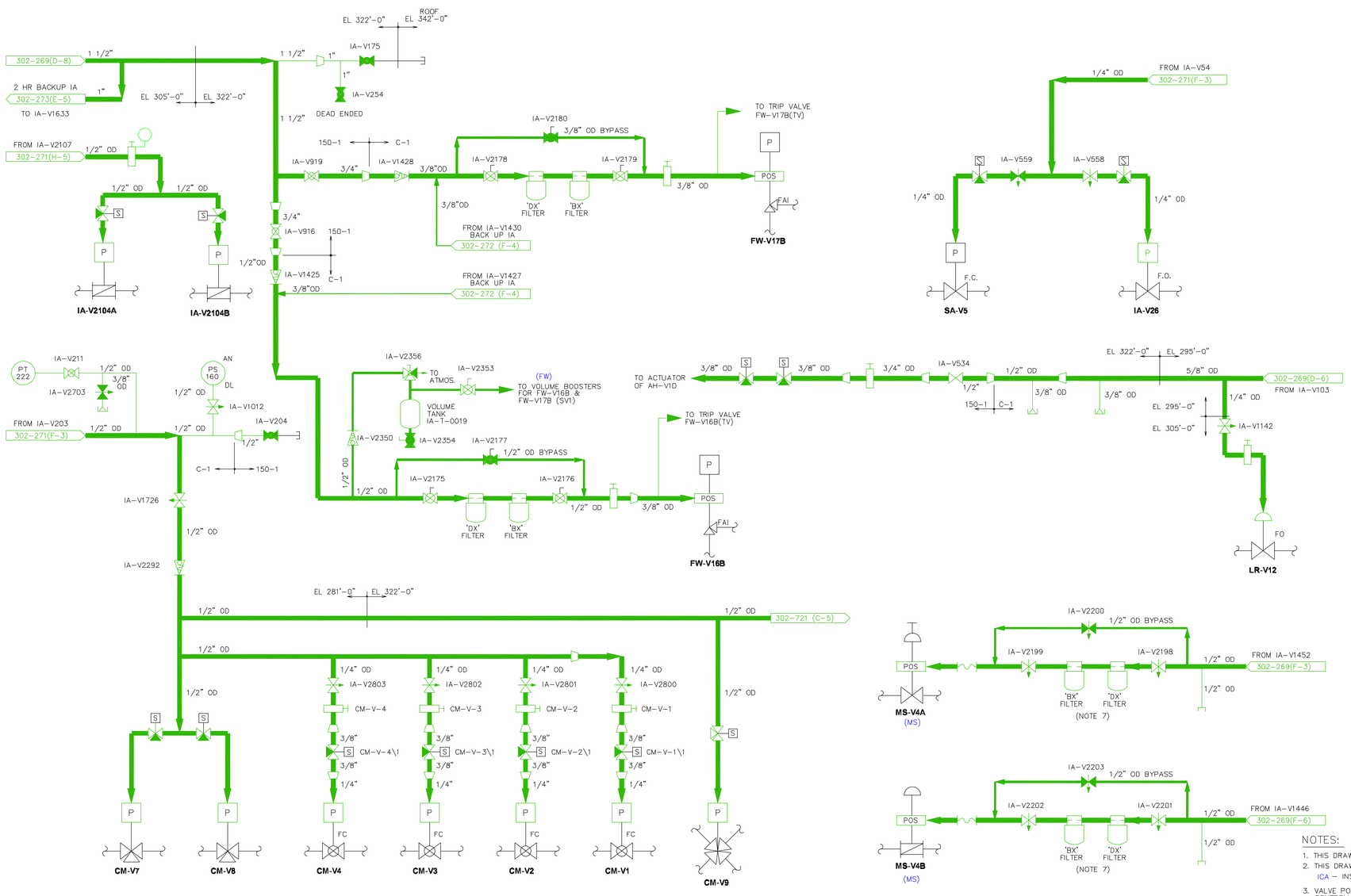

NOTES:

1. THIS DRAWING IS BASED ON DRAWING: 302-268, REVISION 17.
2. THIS DRAWING INCLUDES THE FOLLOWING LICENSE RENEWAL SYSTEMS:
   ICA – INSTRUMENT & CONTROL AIR SYSTEM
3. VALVE POSITIONS SHOWN FOR REFERENCE ONLY. ACTUAL POSITIONS CONTROLLED BY PROCEDURES.
4. ALL INSTRUMENT TAG NUMBERS ARE PREFIXED BY SYSTEM DESIGNATOR UNLESS OTHERWISE NOTED.
5. VALVE BODY SCOPING IS IDENTIFIED ON THE LICENSE RENEWAL DRAWING FOR THE APPLICABLE SYSTEM.
6. THE PRESSURE BOUNDARY SHOWN ON THE INSTRUMENT & CONTROL AIR SYSTEM DRAWINGS INCLUDES TUBING AND TERMINATING COMPONENTS; FOR EXAMPLE, VALVE OPERATORS, CONTROLLERS, SOLENOIDS AND POSITIONERS. THESE ARE ACTIVE COMPONENTS (LOCATED IN NON-SAFETY-RELATED PIPING) AND ARE NOT SUBJECT TO AN AGING MANAGEMENT REVIEW.
7. THE INTERNAL FILTER ELEMENT(S) ARE PERIODICALLY REPLACED AND THEREFORE SHORT-LIVED AND NOT SUBJECT TO AN AGING MANAGEMENT REVIEW.

TABLE OF ADDITIONS & CHANGES

NO	DATE	DESCRIPTION	REV'D	CHK'D	APP'D
0	01 03 08	INITIAL ISSUE FOR LICENSE RENEWAL	T W	J M C	D P C

MECHANICAL

LICENSE RENEWAL DRAWING
INSTRUMENT AIR
INTER BLDG HEADERS & END USERS
FLOW DIAGRAM

THREE MILE ISLAND
AmerGen

SHEET 1 OF 1 LR-302-268 REV 0

DWG.NO. LR-302-268 SH. 1 OF 1

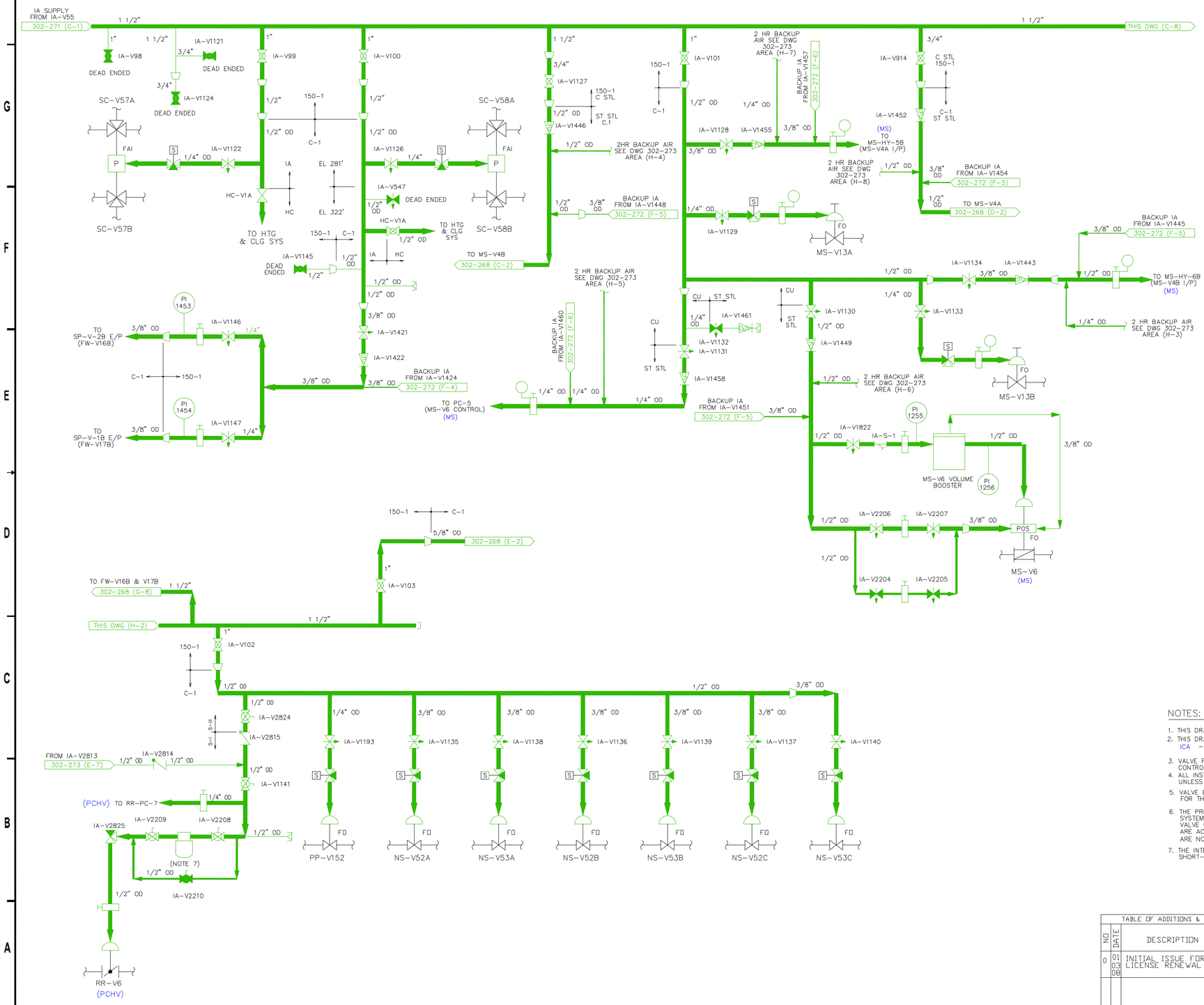

NOTES:

1. THIS DRAWING IS BASED ON DRAWING: 302-269, REVISION 11.
2. THIS DRAWING INCLUDES THE FOLLOWING LICENSE RENEWAL SYSTEMS:
   ICA – INSTRUMENT & CONTROL AIR SYSTEM
3. VALVE POSITIONS SHOWN FOR REFERENCE ONLY. ACTUAL POSITIONS CONTROLLED BY PROCEDURES.
4. ALL INSTRUMENT TAG NUMBERS ARE PREFIXED BY SYSTEM DESIGNATOR UNLESS OTHERWISE NOTED.
5. VALVE BODY SCOPING IS IDENTIFIED ON THE LICENSE RENEWAL DRAWING FOR THE APPLICABLE SYSTEM.
6. THE PRESSURE BOUNDARY SHOWN ON THE INSTRUMENT & CONTROL AIR SYSTEM DRAWINGS INCLUDES TERMINATING COMPONENTS; FOR EXAMPLE, VALVE OPERATORS, CONTROLLERS, SOLENOIDS AND POSITIONERS. THESE ARE ACTIVE COMPONENTS (LOCATED IN NON-SAFETY-RELATED PIPING) AND ARE NOT SUBJECT TO AN AGING MANAGEMENT REVIEW.
7. THE INTERNAL FILTER ELEMENT(S) ARE PERIODICALLY REPLACED AND THEREFORE SHORT-LIVED AND NOT SUBJECT TO AN AGING MANAGEMENT REVIEW.

TABLE OF ADDITIONS & CHANGES

NO	DATE	DESCRIPTION	REV'D	CHK'D	APP'D
0	01 03 08	INITIAL ISSUE FOR LICENSE RENEWAL	TW	JMC	DPC

MECHANICAL

LICENSE RENEWAL DRAWING
INSTRUMENT AIR
INTER BLDG HEADERS & END USERS
FLOW DIAGRAM

THREE MILE ISLAND
AmerGen

SHEET 1 OF 1 | LR-302-269 | REV 0

DWG.NO. LR-302-269 SH. 1 OF 1

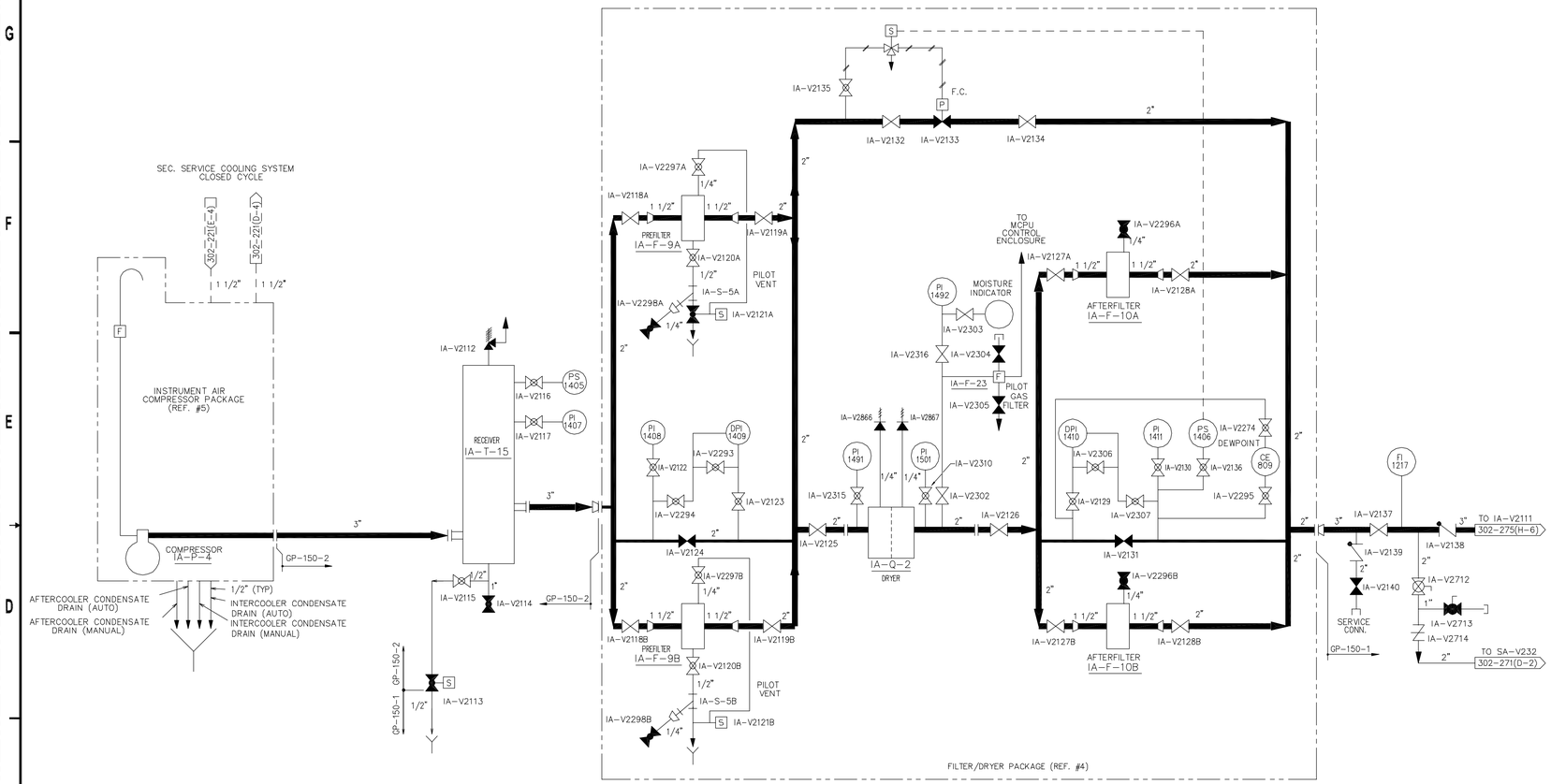

NOTES:

1. THIS DRAWING IS BASED ON DRAWING: 302-270, REVISION 5..
2. THIS DRAWING INCLUDESTHE FOLLOWING LICENSE RENEWAL SYSTEMS:
   ICA - INSTRUMENT & CONTROL AIR SYSTEM
3. VALVE POSITIONS SHOWN FOR REFERENCE ONLY. ACTUAL POSITIONS CONTROLLED BY PROCEDURES.
4. ALL INSTRUMENT TAG NUMBERS ARE PREFIXED BY SYSTEM DESIGNATOR UNLESS OTHERWISE NOTED.
5. VALVE BODY SCOPING IS IDENTIFIED ON THE LICENSE RENEWAL DRAWING FOR THE APPLICABLE SYSTEM.
6. THE PRESSURE BOUNDARY SHOWN ON THE INSTRUMENT & CONTROL AIR SYSTEM DRAWINGS INCLUDES TERMINATING COMPONENTS; FOR EXAMPLE, VALVE OPERATORS, CONTROLLERS, SOLENOIDS AND POSITIONERS. THESE ARE ACTIVE COMPONENTS (LOCATED IN NON-SAFETY-RELATED PIPING) AND ARE NOT SUBJECT TO AN AGING MANAGEMENT REVIEW.
7. ALL PIPING AND EQUIPMENT ON THIS DRAWING IS SEISMIC CLASS III.

TABLE OF ADDITIONS & CHANGES

NO	DATE	DESCRIPTION	REV'D	CHK'D	APP'D
0	01 03 08	INITIAL ISSUE FOR LICENSE RENEWAL	T W	J M C	D P C

MECHANICAL

LICENSE RENEWAL DRAWING
INSTRUMENT AIR
TURBINE BLDG. INSTRUMENT AIR COMPRESSOR AND DRYER
FLOW DIAGRAM

THREE MILE ISLAND
AmerGen

SHEET 1 OF 1 | LR-302-270 | REV 0

DWG.NO. LR-302-270 SH. 1 OF 1

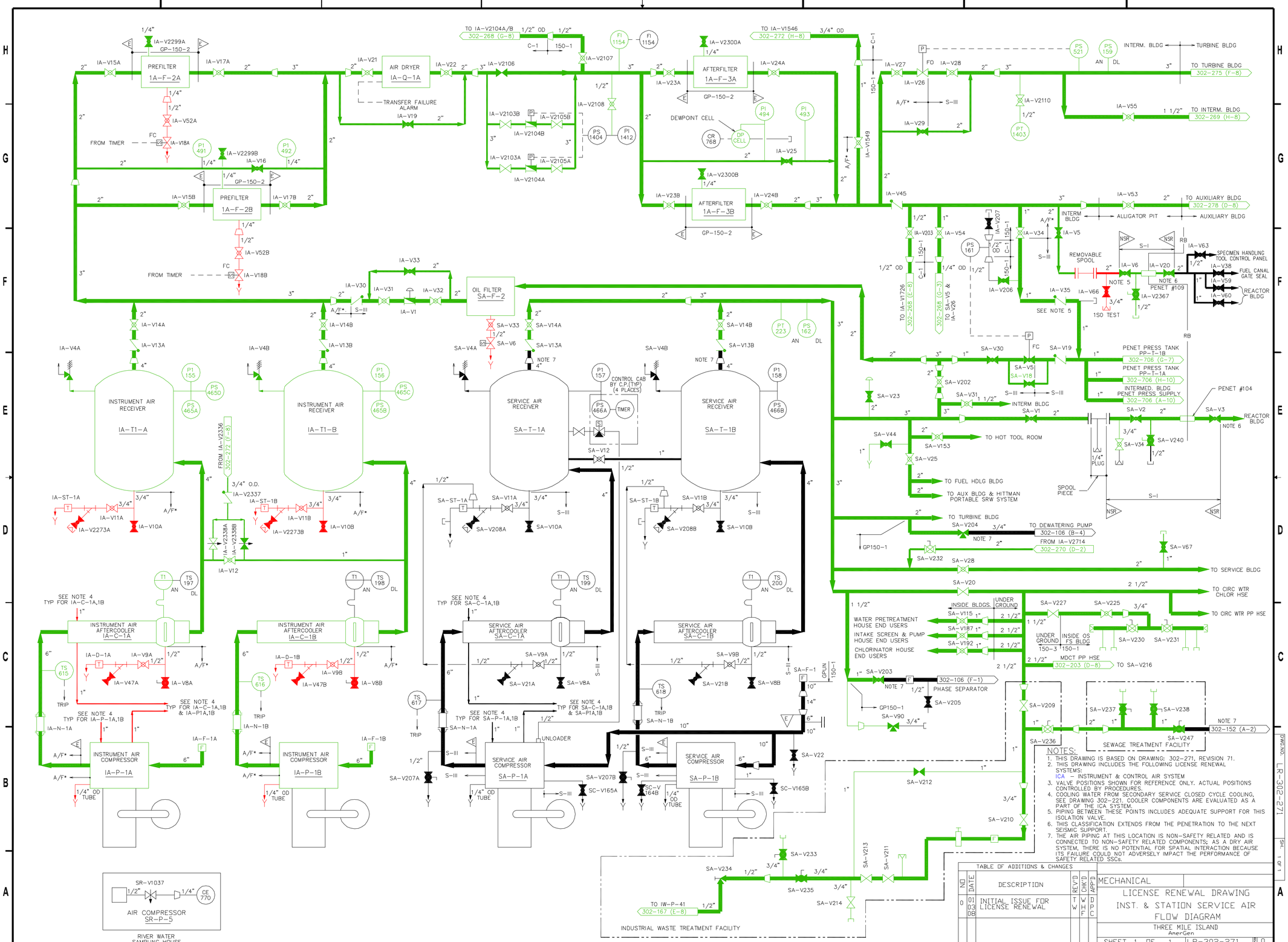

NOTES:

1. THIS DRAWING IS BASED ON DRAWING: 302-271, REVISION 71.
2. THIS DRAWING INCLUDES THE FOLLOWING LICENSE RENEWAL SYSTEMS:
   ICA – INSTRUMENT & CONTROL AIR SYSTEM
3. VALVE POSITIONS SHOWN FOR REFERENCE ONLY. ACTUAL POSITIONS CONTROLLED BY PROCEDURES.
4. COOLING WATER FROM SECONDARY SERVICE CLOSED CYCLE COOLING, SEE DRAWING 302-221. COOLER COMPONENTS ARE EVALUATED AS A PART OF THE ICA SYSTEM.
5. PIPING BETWEEN THESE POINTS INCLUDES ADEQUATE SUPPORT FOR THIS ISOLATION VALVE.
6. THIS CLASSIFICATION EXTENDS FROM THE PENETRATION TO THE NEXT SEISMIC SUPPORT.
7. THE AIR PIPING AT THIS LOCATION IS NON-SAFETY RELATED AND IS CONNECTED TO NON-SAFETY RELATED COMPONENTS; AS A DRY AIR SYSTEM, THERE IS NO POTENTIAL FOR SPATIAL INTERACTION BECAUSE ITS FAILURE COULD NOT ADVERSELY IMPACT THE PERFORMANCE OF SAFETY RELATED SSCs.

TABLE OF ADDITIONS & CHANGES

NO	DATE	DESCRIPTION	REV'D	CHK'D	APP'D
0	01 03 08	INITIAL ISSUE FOR LICENSE RENEWAL	TW	WHF	DPC

MECHANICAL

LICENSE RENEWAL DRAWING
INST. & STATION SERVICE AIR
FLOW DIAGRAM

THREE MILE ISLAND
AmerGen

SHEET 1 OF 1 | LR-302-271 | 0

DWG.NO. LR-302-271 | SH. 1 OF 1

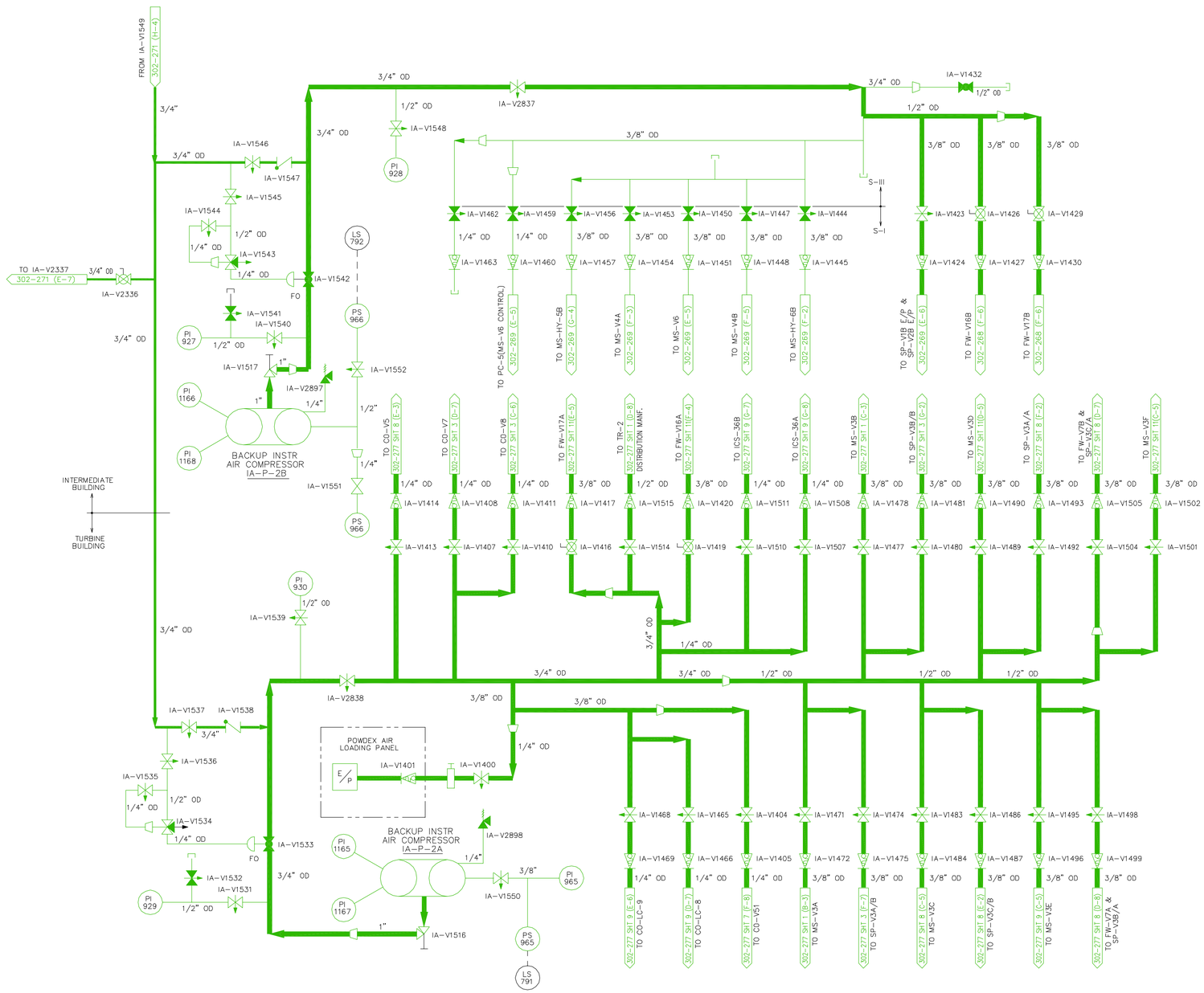

NOTES:

1. THIS DRAWING IS BASED ON DRAWING: 302-272, REVISION 18..
2. THIS DRAWING INCLUDES THE FOLLOWING LICENSE RENEWAL SYSTEMS:
   ICA – INSTRUMENT & CONTROL AIR SYSTEM
3. VALVE POSITIONS SHOWN FOR REFERENCE ONLY. ACTUAL POSITIONS CONTROLLED BY PROCEDURES.
4. ALL INSTRUMENT TAG NUMBERS ARE PREFIXED BY SYSTEM DESIGNATOR UNLESS OTHERWISE NOTED.
5. THE PRESSURE BOUNDARY SHOWN ON THE INSTRUMENT & CONTROL AIR SYSTEM DRAWINGS INCLUDES TERMINATING COMPONENTS; FOR EXAMPLE; VALVE OPERATORS, CONTROLLERS, SOLENOIDS AND POSITIONERS. THESE ARE ACTIVE COMPONENTS (LOCATED IN NON-SAFETY-RELATED PIPING) AND ARE NOT SUBJECT TO AN AGING MANAGEMENT REVIEW.

TABLE OF ADDITIONS & CHANGES

NO	DATE	DESCRIPTION	REV'D	CHK'D	APP'D
0	01 03 08	INITIAL ISSUE FOR LICENSE RENEWAL	T W	J M C	D P C

MECHANICAL

LICENSE RENEWAL DRAWING

BACKUP INSTRUMENT AIR FLOW DIAGRAM

THREE MILE ISLAND
AmerGen

SHEET 1 OF 1 | LR-302-272 | REV 0

DWG.NO. LR-302-272 | SH. 1 OF 1

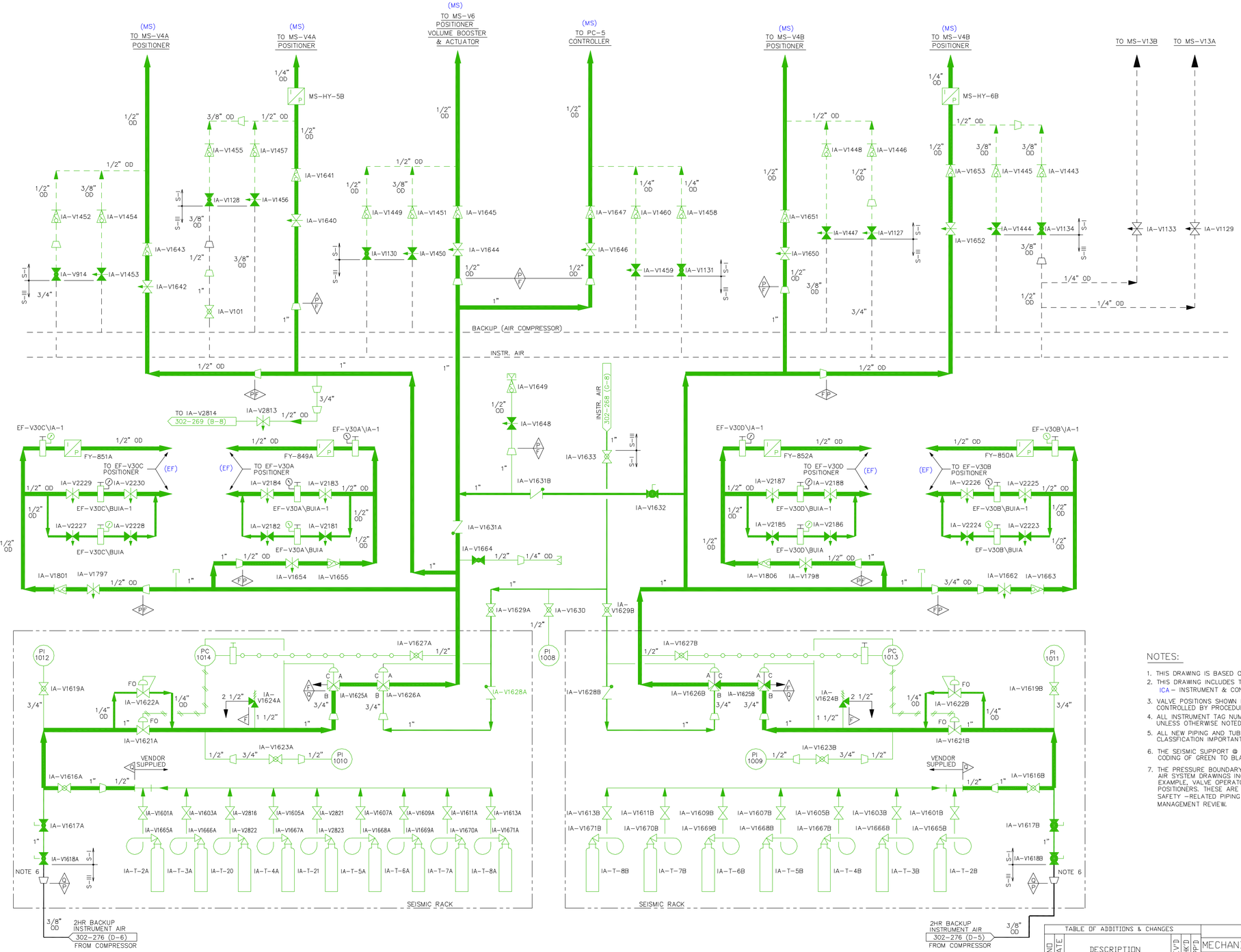

NOTES:

1. THIS DRAWING IS BASED ON DRAWING: 302-273, REVISION 21.
2. THIS DRAWING INCLUDES THE FOLLOWING LICENSE RENEWAL SYSTEMS: ICA – INSTRUMENT & CONTROL AIR SYSTEM
3. VALVE POSITIONS SHOWN FOR REFERENCE ONLY. ACTUAL POSITIONS CONTROLLED BY PROCEDURES.
4. ALL INSTRUMENT TAG NUMBERS ARE PREFIXED BY SYSTEM DESIGNATOR UNLESS OTHERWISE NOTED.
5. ALL NEW PIPING AND TUBING IS SEISMIC CLASS I, QUAILITY CLASSFICATION IMPORTANT TO SAFETY.
6. THE SEISMIC SUPPORT @ VALVE IA-V-1618 A/B ALLOWS THE COLOR CODING OF GREEN TO BLACK.
7. THE PRESSURE BOUNDARY SHOWN ON THE INSTRUMENT & CONTROL AIR SYSTEM DRAWINGS INCLUDES TERMINATING COMPONENTS; FOR EXAMPLE, VALVE OPERATORS, CONTROLLERS, SOLENOIDS AND POSITIONERS. THESE ARE ACTIVE COMPONENTS (LOCATED IN NON-SAFETY -RELATED PIPING) AND ARE NOT SUBJECT TO AN AGING MANAGEMENT REVIEW.

TABLE OF ADDITIONS & CHANGES

NO	DATE	DESCRIPTION	REV'D	CHK'D	APP'D
0	01 03 08	INITIAL ISSUE FOR LICENSE RENEWAL	T W	J M C	D P C

MECHANICAL

LICENSE RENEWAL DRAWING
EMERGENCY FEEDWATER
& MAIN STEAM VALVE, 2 HOUR BACKUP SUPPLY AIR
FLOW DIAGRAM

THREE MILE ISLAND
AmerGen

SHEET 1 OF 1 | LR-302-273 | 0

DWG.NO. LR-302-273 | SH. 1 OF 1

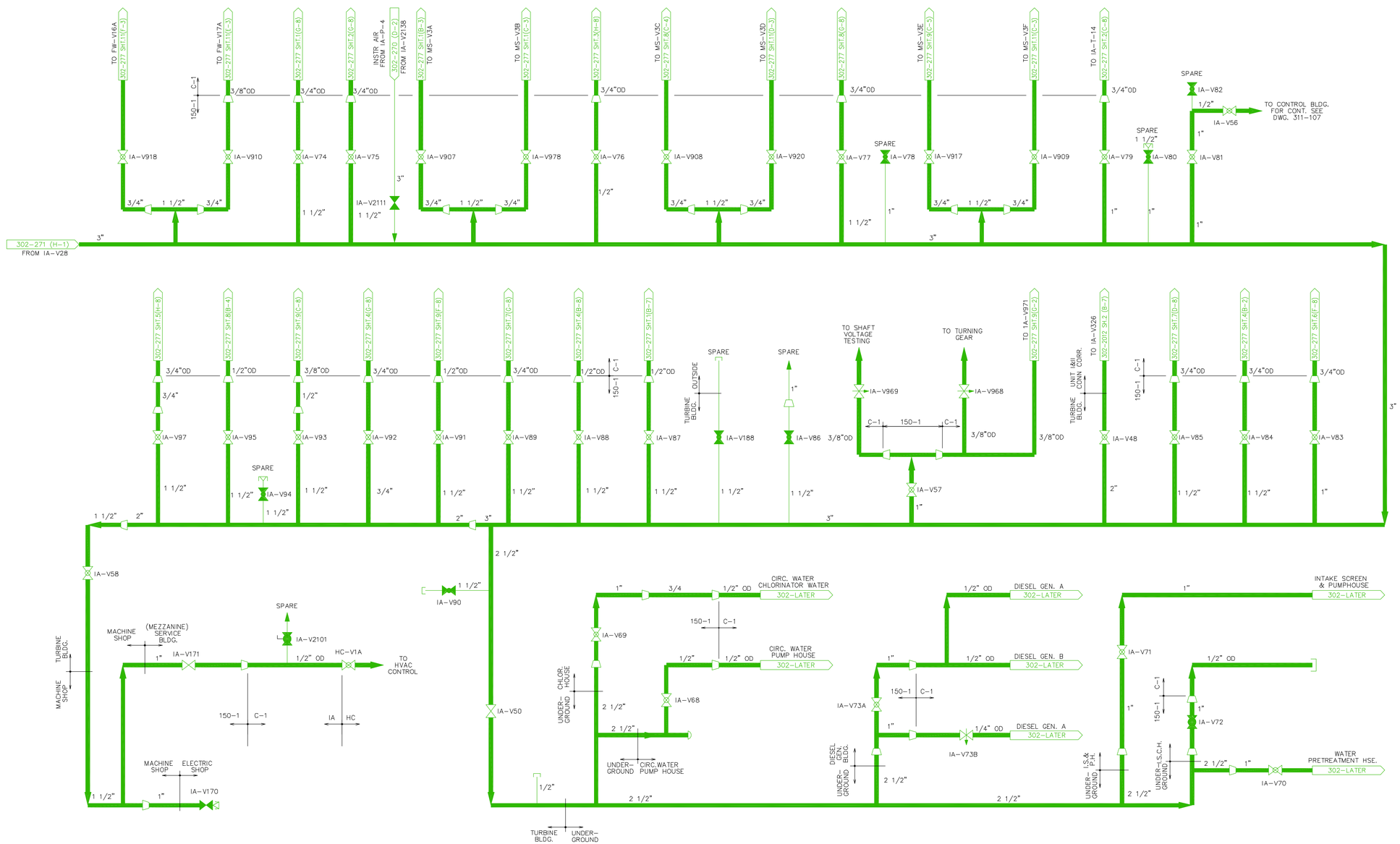

NOTES:

1. THIS DRAWING IS BASED ON DRAWING: 302-275, REVISION 13..
2. THIS DRAWING INCLUDES THE FOLLOWING LICENSE RENEWAL SYSTEMS:
   ICA – INSTRUMENT &CONTROL AIR SYSTEM
2. VALVE POSITIONS SHOWN FOR REFERENCE ONLY. ACTUAL POSITIONS CONTROLLED BY PROCEDURES.
3. ALL INSTRUMENT TAG NUMBERS ARE PREFIXED BY SYSTEM DESIGNATOR UNLESS OTHERWISE NOTED.
4. 302-LATER DEPICTS THAT A NEW DRAWING WILL BE MADE TO DETERMINE I.A. END USERS.
5. THE PRESSURE BOUNDARY SHOWN ON THE INSTRUMENT & CONTROL AIR SYSTEM DRAWINGS INCLUDES TERMINATING COMPONENTS. FOR EXAMPLE, VALVE OPERATORS, CONTROLLERS, SOLENOIDS AND POSITIONERS. THESE ARE ACTIVE COMPONENTS (LOCATED IN NON-SAFETY-RELATED PIPING) AND ARE NOT SUBJECT TO AN AGING MANAGEMENT REVIEW.

TABLE OF ADDITIONS & CHANGES

NO	DATE	DESCRIPTION	REV'D	CHK'D	APP'D
0	01 03 03	INITIAL ISSUE FOR LICENSE RENEWAL	T W	J M C	D P C

MECHANICAL

LICENSE RENEWAL DRAWING
INSTRUMENT AIR
TURBINE & OUT BUILDINGS-HEADER
FLOW DIAGRAM

THREE MILE ISLAND
AmerGen

SHEET 1 OF 1 | LR-302-275 | REV 0

DWG.NO. LR-302-275 SH. 1 OF 1

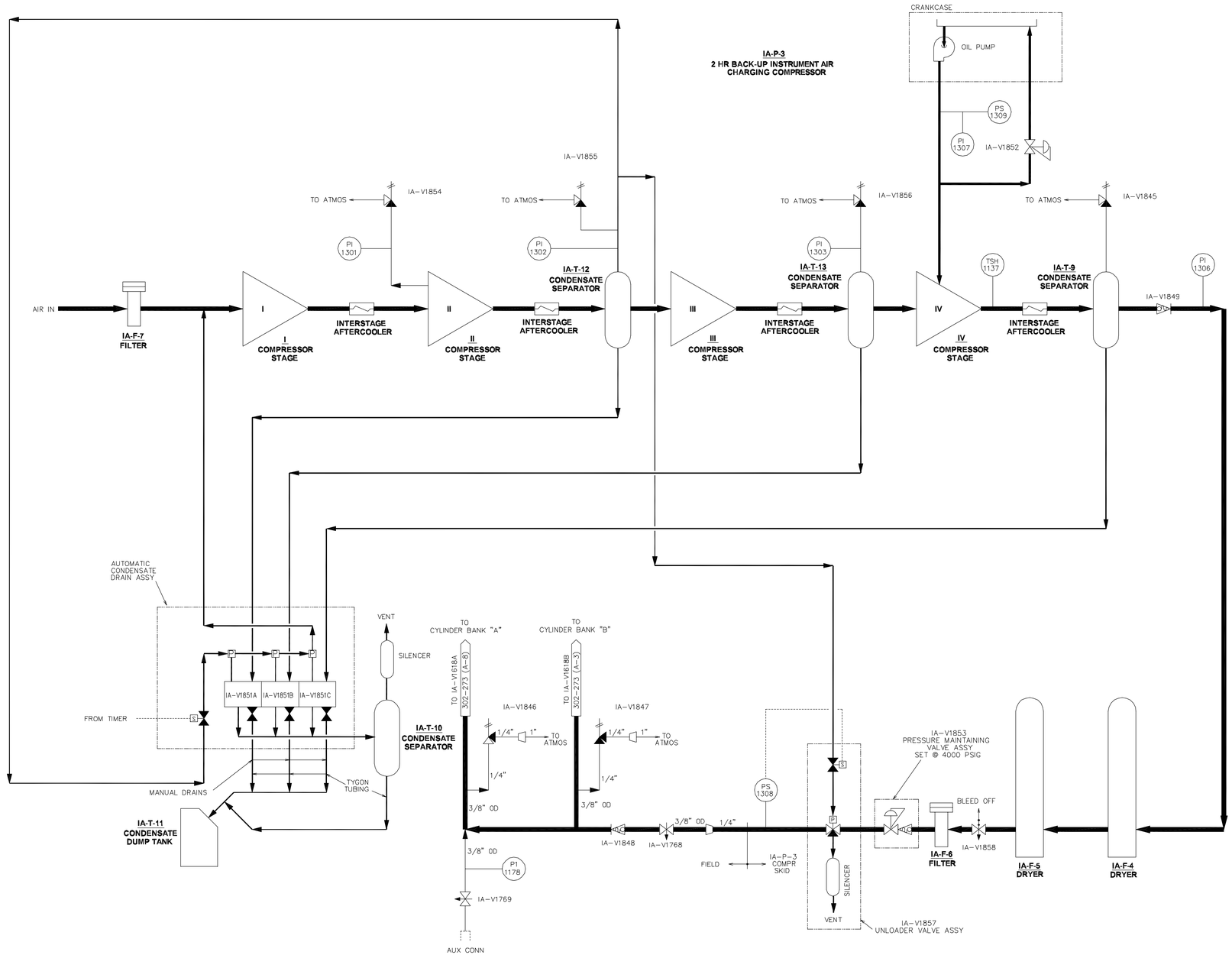

NOTES

1. THIS DRAWING IS BASED ON DRAWING 302-276, REVISION 6.
2. THIS DRAWING INCLUDES THE FOLLOWING LICENSE RENEWAL SYSTEMS:
   ICA - INSTRUMENT AND CONTROL AIR SYSTEM
2. VALVE POSITIONS SHOWN FOR REFERENCE ONLY. ACTUAL POSITIONS CONTROLLED BY PROCEDURES.
3. ALL INSTRUMENT TAG NUMBERS ARE PREFIXED BY SYSTEM DESIGNATOR UNLESS OTHERWISE NOTED.

TABLE OF ADDITIONS & CHANGES

NO	DATE	DESCRIPTION	REV'D	CHK'D	APP'D
0	01 03 08	INITIAL ISSUE FOR LICENSE RENEWAL	T W	J M C	D P C

MECHANICAL

LICENSE RENEWAL DRAWING
INSTRUMENT AIR
2 HR BACKUP INSTR AIR CHARGING COMP
FLOW DIAGRAM

THREE MILE ISLAND
AmerGen

SHEET 1 OF 1 LR-302-276 REV 0

DWG.NO. LR-302-276 SH. 1

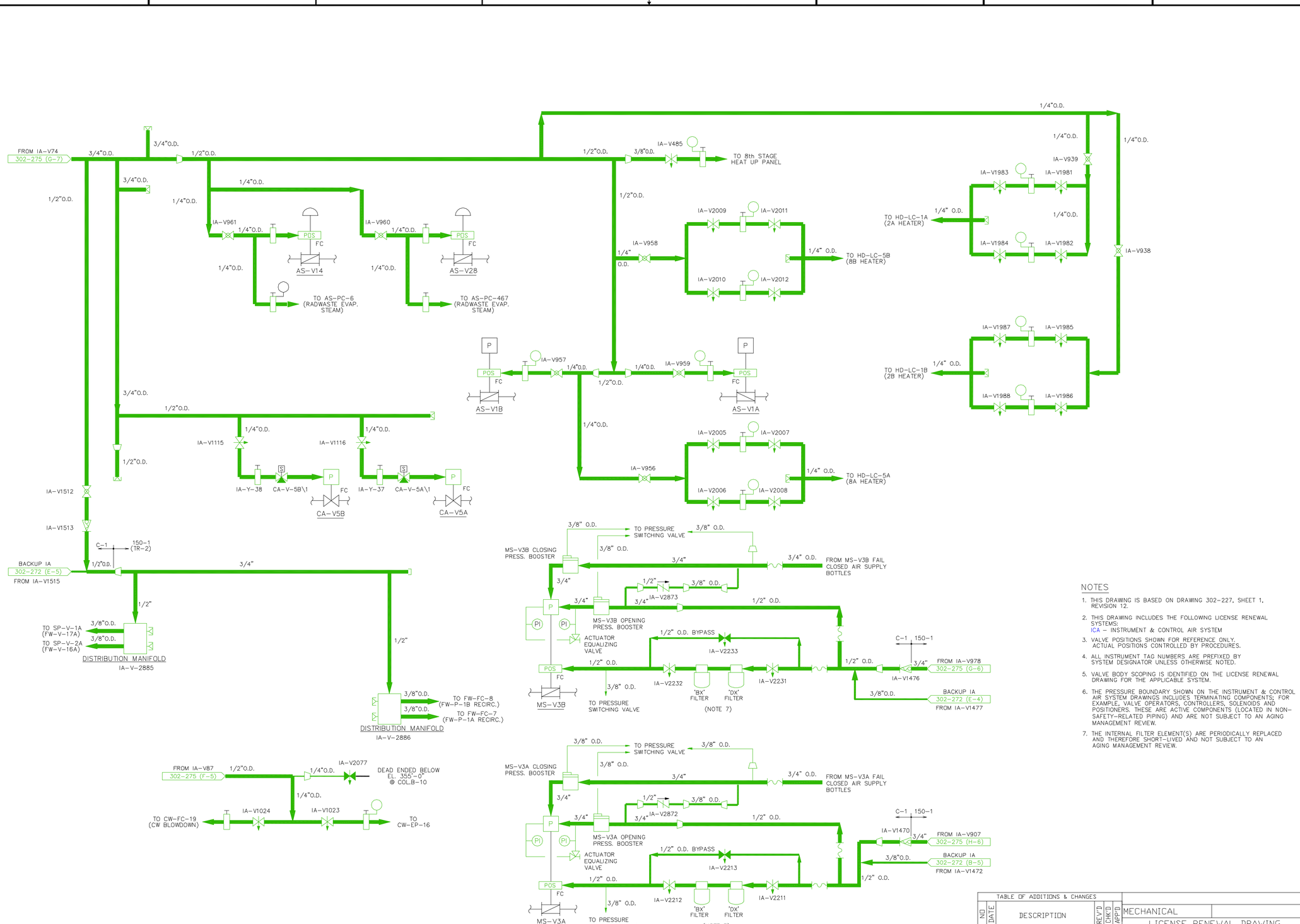

NOTES

1. THIS DRAWING IS BASED ON DRAWING 302-227, SHEET 1, REVISION 12.
2. THIS DRAWING INCLUDES THE FOLLOWING LICENSE RENEWAL SYSTEMS:
   ICA – INSTRUMENT & CONTROL AIR SYSTEM
3. VALVE POSITIONS SHOWN FOR REFERENCE ONLY. ACTUAL POSITIONS CONTROLLED BY PROCEDURES.
4. ALL INSTRUMENT TAG NUMBERS ARE PREFIXED BY SYSTEM DESIGNATOR UNLESS OTHERWISE NOTED.
5. VALVE BODY SCOPING IS IDENTIFIED ON THE LICENSE RENEWAL DRAWING FOR THE APPLICABLE SYSTEM.
6. THE PRESSURE BOUNDARY SHOWN ON THE INSTRUMENT & CONTROL AIR SYSTEM DRAWINGS INCLUDES TERMINATING COMPONENTS; FOR EXAMPLE, VALVE OPERATORS, CONTROLLERS, SOLENOIDS AND POSITIONERS. THESE ARE ACTIVE COMPONENTS (LOCATED IN NON-SAFETY-RELATED PIPING) AND ARE NOT SUBJECT TO AN AGING MANAGEMENT REVIEW.
7. THE INTERNAL FILTER ELEMENT(S) ARE PERIODICALLY REPLACED AND THEREFORE SHORT-LIVED AND NOT SUBJECT TO AN AGING MANAGEMENT REVIEW.

TABLE OF ADDITIONS & CHANGES

NO	DATE	DESCRIPTION	REV'D	CHK'D	APP'D
0	01 03 08	INITIAL ISSUE FOR LICENSE RENEWAL	T W	J M C	D P C

MECHANICAL

LICENSE RENEWAL DRAWING
INSTRUMENT AIR
TURBINE BUILDING END USERS
FLOW DIAGRAM

THREE MILE ISLAND
AmerGen

SHEET 1 OF 13 | LR-302-277 | REV 0

DWG.NO. LR-302-277 SH. 1

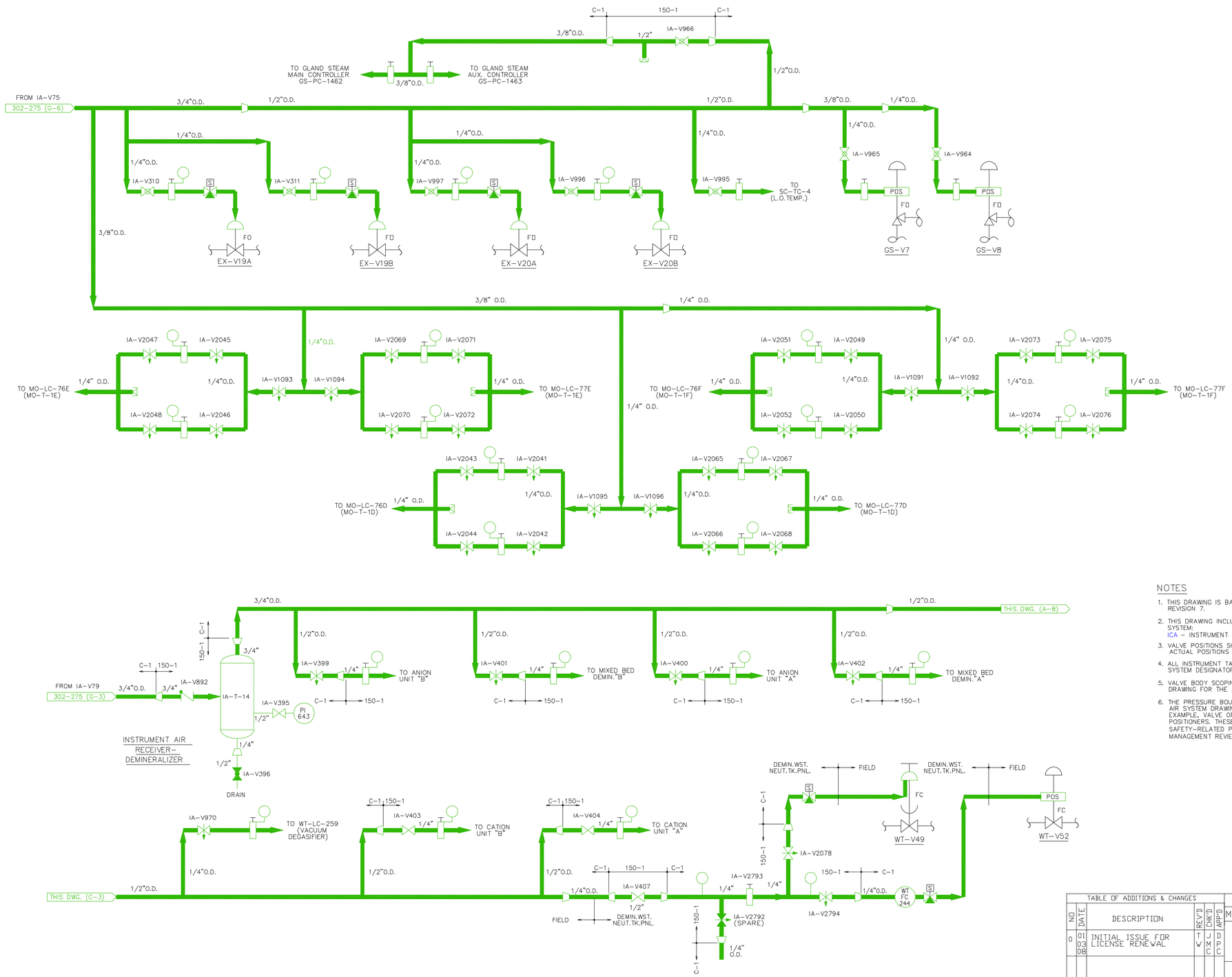

NOTES

1. THIS DRAWING IS BASED ON DRAWING 302-227, SHEET 2, REVISION 7.
2. THIS DRAWING INCLUDES THE FOLLOWING LICENSE RENEWAL SYSTEM:
   ICA – INSTRUMENT & CONTROL AIR SYSTEM
3. VALVE POSITIONS SHOWN FOR REFERENCE ONLY. ACTUAL POSITIONS CONTROLLED BY PROCEDURES.
4. ALL INSTRUMENT TAG NUMBERS ARE PREFIXED BY SYSTEM DESIGNATOR UNLESS OTHERWISE NOTED.
5. VALVE BODY SCOPING IS IDENTIFIED ON THE LICENSE RENEWAL DRAWING FOR THE APPLICABLE SYSTEM.
6. THE PRESSURE BOUNDARY SHOWN ON THE INSTRUMENT & CONTROL AIR SYSTEM DRAWINGS INCLUDES TERMINATING COMPONENTS; FOR EXAMPLE, VALVE OPERATORS, CONTROLLERS, SOLENOIDS AND POSITIONERS. THESE ARE ACTIVE COMPONENTS (LOCATED IN NON-SAFETY-RELATED PIPING) AND ARE NOT SUBJECT TO AN AGING MANAGEMENT REVIEW.

TABLE OF ADDITIONS & CHANGES

NO	DATE	DESCRIPTION	REV'D	CHK'D	APP'D
0	01 03 03	INITIAL ISSUE FOR LICENSE RENEWAL	TW	JMC	DPC

MECHANICAL

LICENSE RENEWAL DRAWING
INSTRUMENT AIR
TURBINE BUILDING END USERS
FLOW DIAGRAM

THREE MILE ISLAND
AmerGen

SHEET 2 OF 13 LR-302-277 REV 0

DWG.NO. LR-302-277 SH. 2

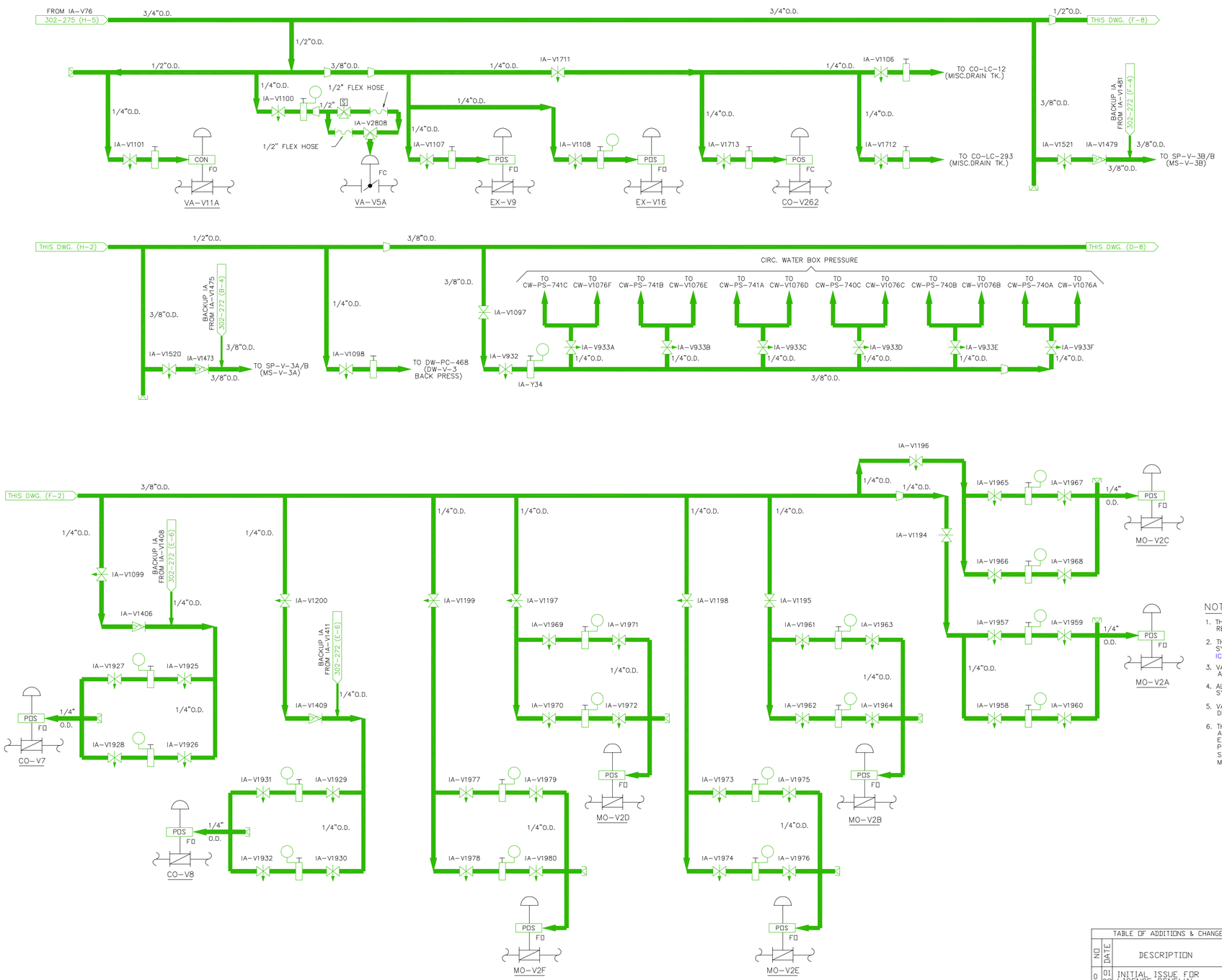

NOTES

1. THIS DRAWING IS BASED ON DRAWING 302-227, SHEET 3, REVISION 8.
2. THIS DRAWING INCLUDES THE FOLLOWING LICENSE RENEWAL SYSTEM:
   ICA – INSTRUMENT & CONTROL AIR SYSTEM
3. VALVE POSITIONS SHOWN FOR REFERENCE ONLY. ACTUAL POSITIONS CONTROLLED BY PROCEDURES.
4. ALL INSTRUMENT TAG NUMBERS ARE PREFIXED BY SYSTEM DESIGNATOR UNLESS OTHERWISE NOTED.
5. VALVE BODY SCOPING IS IDENTIFIED ON THE LICENSE RENEWAL DRAWING FOR THE APPLICABLE SYSTEM.
6. THE PRESSURE BOUNDARY SHOWN ON THE INSTRUMENT & CONTROL AIR SYSTEM DRAWINGS INCLUDES TERMINATING COMPONENTS; FOR EXAMPLE, VALVE OPERATORS, CONTROLLERS, SOLENOIDS AND POSITIONERS. THESE ARE ACTIVE COMPONENTS (LOCATED IN NON-SAFETY-RELATED PIPING) AND ARE NOT SUBJECT TO AN AGING MANAGEMENT REVIEW.

TABLE OF ADDITIONS & CHANGES

NO	DATE	DESCRIPTION	REV'D	CHK'D	APP'D
0	01 03 08	INITIAL ISSUE FOR LICENSE RENEWAL	T W	J M C	D P C

MECHANICAL

LICENSE RENEWAL DRAWING
INSTRUMENT AIR
TURBINE BUILDING END USERS
FLOW DIAGRAM

THREE MILE ISLAND
AmerGen

SHEET 3 OF 13 | LR-302-277 | REV 0

DWG.NO. LR-302-277 SH. 3

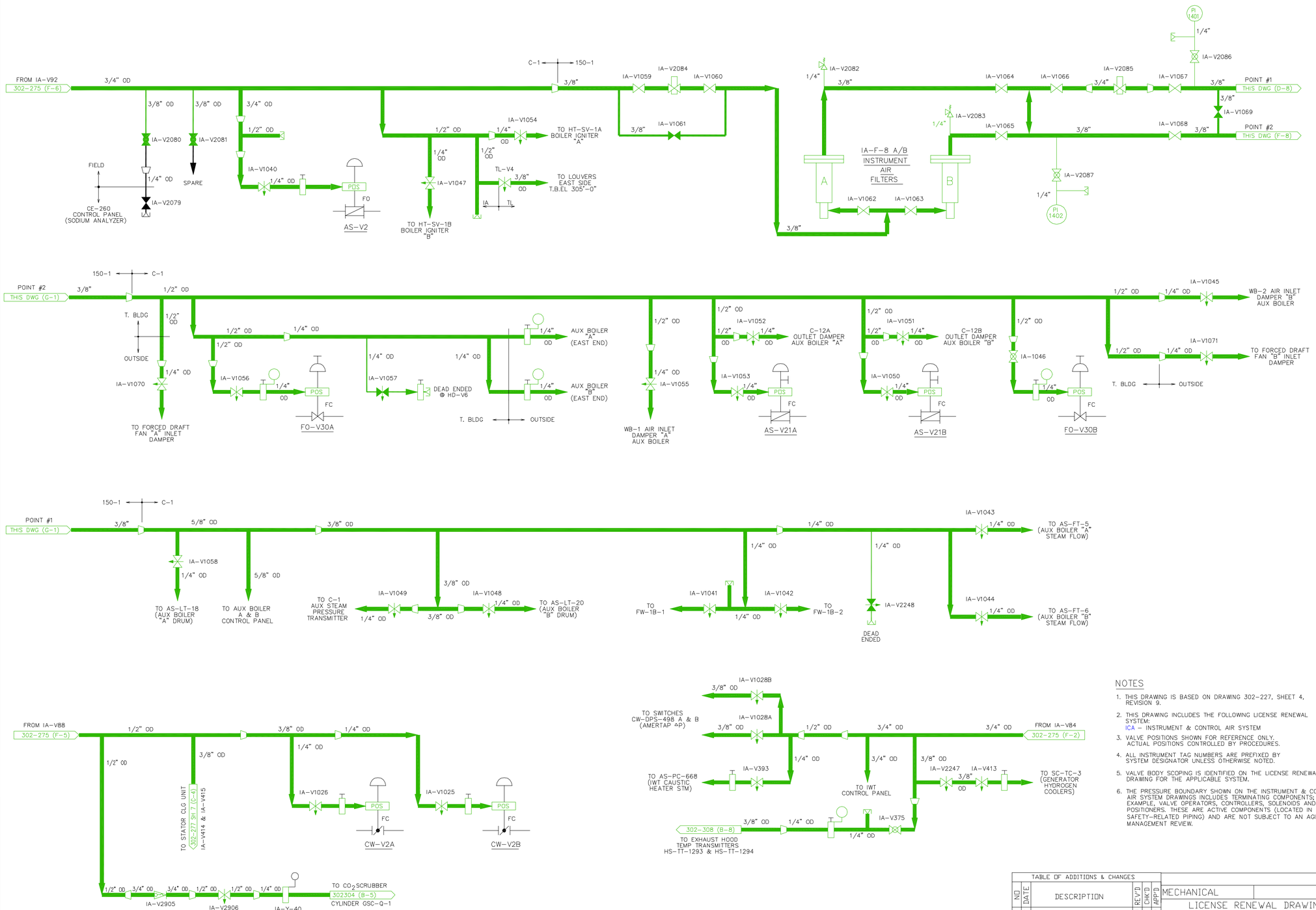

NOTES

1. THIS DRAWING IS BASED ON DRAWING 302-227, SHEET 4, REVISION 9.
2. THIS DRAWING INCLUDES THE FOLLOWING LICENSE RENEWAL SYSTEM:
   ICA – INSTRUMENT & CONTROL AIR SYSTEM
3. VALVE POSITIONS SHOWN FOR REFERENCE ONLY. ACTUAL POSITIONS CONTROLLED BY PROCEDURES.
4. ALL INSTRUMENT TAG NUMBERS ARE PREFIXED BY SYSTEM DESIGNATOR UNLESS OTHERWISE NOTED.
5. VALVE BODY SCOPING IS IDENTIFIED ON THE LICENSE RENEWAL DRAWING FOR THE APPLICABLE SYSTEM.
6. THE PRESSURE BOUNDARY SHOWN ON THE INSTRUMENT & CONTROL AIR SYSTEM DRAWINGS INCLUDES TERMINATING COMPONENTS; FOR EXAMPLE, VALVE OPERATORS, CONTROLLERS, SOLENOIDS AND POSITIONERS. THESE ARE ACTIVE COMPONENTS (LOCATED IN NON-SAFETY-RELATED PIPING) AND ARE NOT SUBJECT TO AN AGING MANAGEMENT REVIEW.

TABLE OF ADDITIONS & CHANGES

NO	DATE	DESCRIPTION	REV'D	CHK'D	APP'D
0	01 03 03	INITIAL ISSUE FOR LICENSE RENEWAL	T W	J M C	D P C

MECHANICAL

LICENSE RENEWAL DRAWING
INSTRUMENT AIR
TURBINE BUILDING END USERS
FLOW DIAGRAM

THREE MILE ISLAND
AmerGen

SHEET 4 OF 13 LR-302-277 REV 0

DWG.NO. LR-302-277 SH. 4

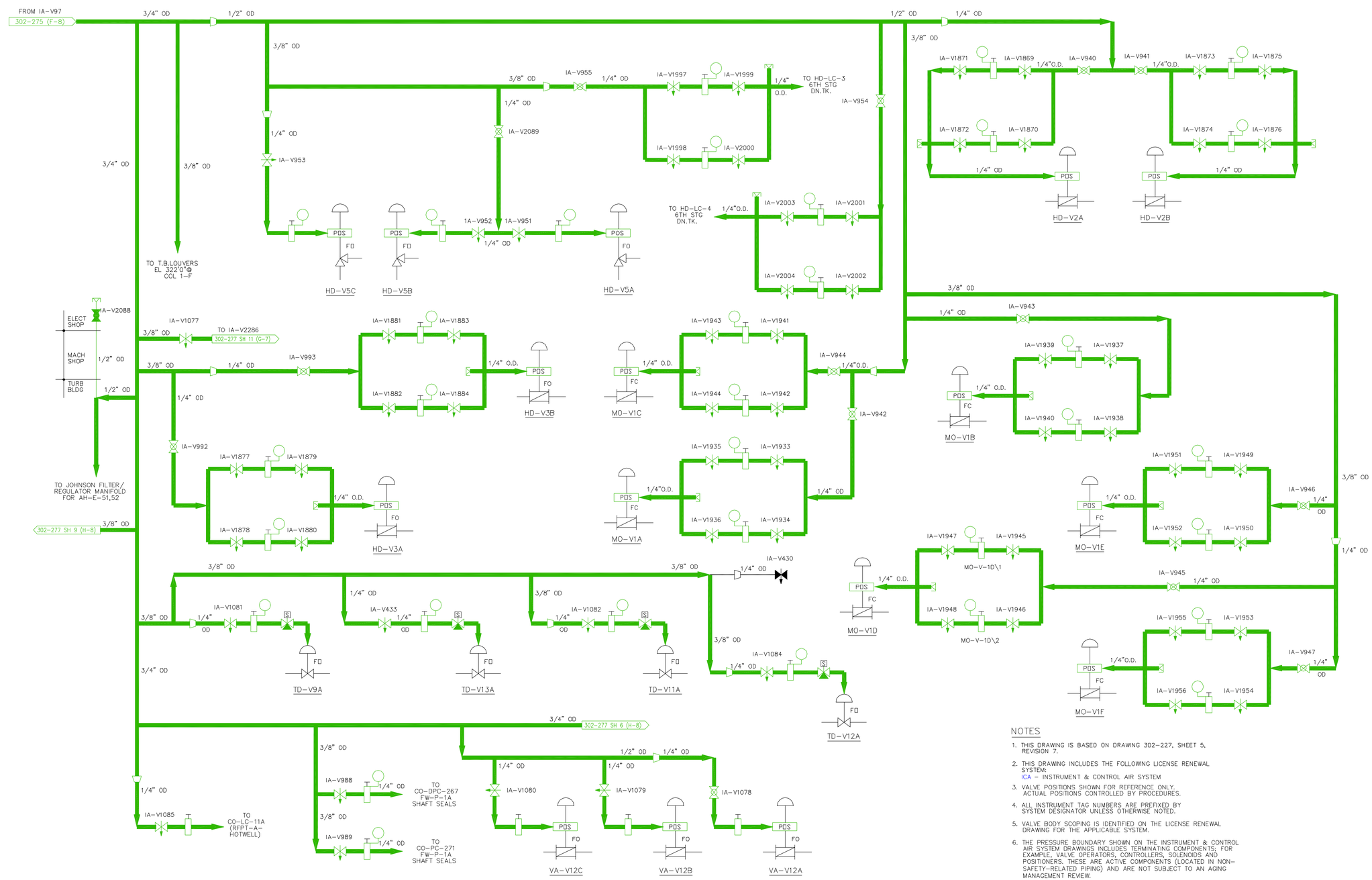

NOTES

1. THIS DRAWING IS BASED ON DRAWING 302-227, SHEET 5, REVISION 7.
2. THIS DRAWING INCLUDES THE FOLLOWING LICENSE RENEWAL SYSTEM:
   ICA - INSTRUMENT & CONTROL AIR SYSTEM
3. VALVE POSITIONS SHOWN FOR REFERENCE ONLY. ACTUAL POSITIONS CONTROLLED BY PROCEDURES.
4. ALL INSTRUMENT TAG NUMBERS ARE PREFIXED BY SYSTEM DESIGNATOR UNLESS OTHERWISE NOTED.
5. VALVE BODY SCOPING IS IDENTIFIED ON THE LICENSE RENEWAL DRAWING FOR THE APPLICABLE SYSTEM.
6. THE PRESSURE BOUNDARY SHOWN ON THE INSTRUMENT & CONTROL AIR SYSTEM DRAWINGS INCLUDES TERMINATING COMPONENTS; FOR EXAMPLE, VALVE OPERATORS, CONTROLLERS, SOLENOIDS AND POSITIONERS. THESE ARE ACTIVE COMPONENTS (LOCATED IN NON-SAFETY-RELATED PIPING) AND ARE NOT SUBJECT TO AN AGING MANAGEMENT REVIEW.

TABLE OF ADDITIONS & CHANGES

NO	DATE	DESCRIPTION	REV'D	CHK'D	APP'D
0	01 03 08	INITIAL ISSUE FOR LICENSE RENEWAL	T W	J M C	D P C

MECHANICAL

LICENSE RENEWAL DRAWING
INSTRUMENT AIR
TURBINE BUILDING END USERS
FLOW DIAGRAM

THREE MILE ISLAND
AmerGen

SHEET 5 OF 13 LR-302-277 REV 0

DWG.NO. LR-302-277 SH. 5

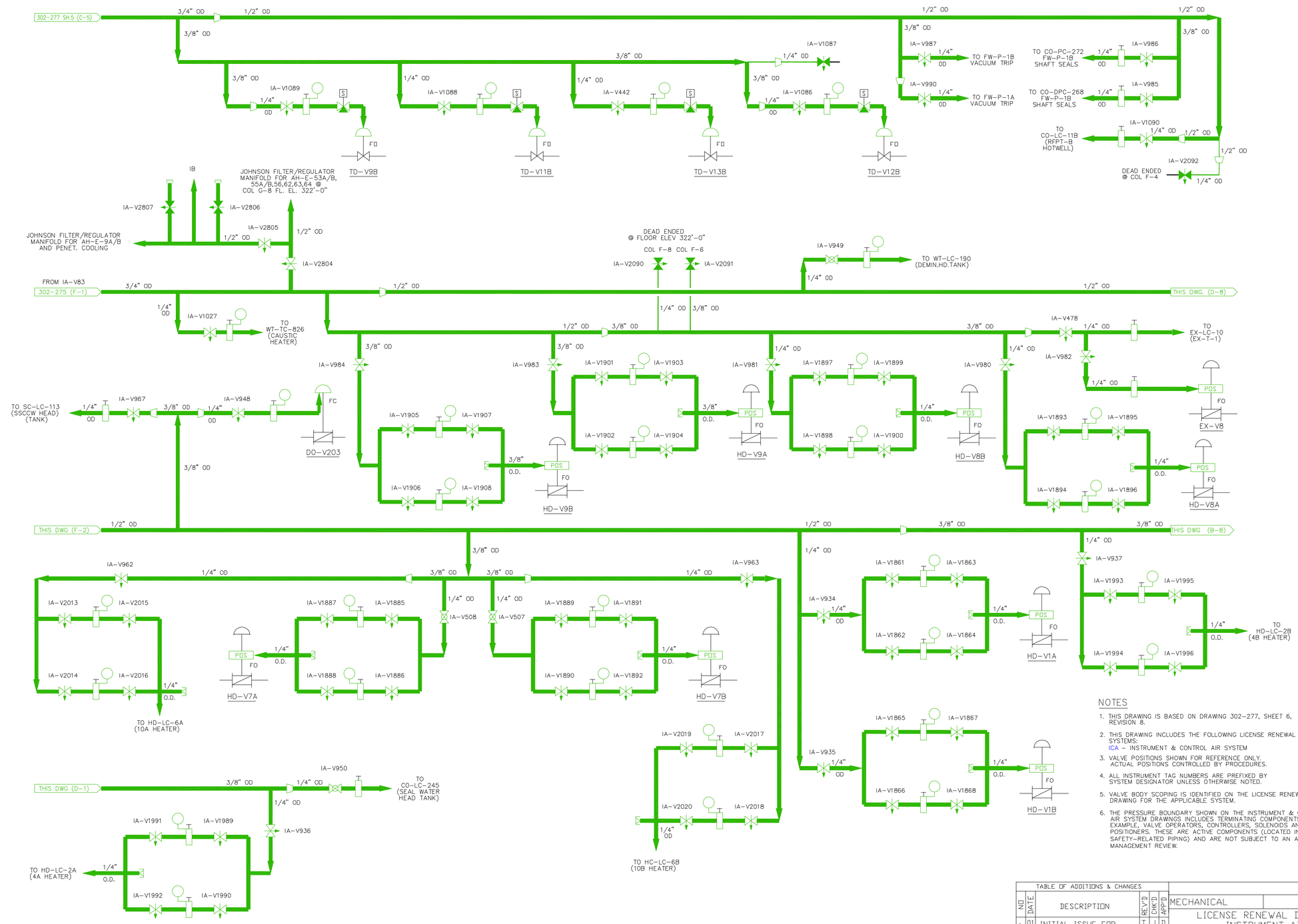

NOTES

1. THIS DRAWING IS BASED ON DRAWING 302-277, SHEET 6, REVISION 8.
2. THIS DRAWING INCLUDES THE FOLLOWING LICENSE RENEWAL SYSTEMS:
   ICA - INSTRUMENT & CONTROL AIR SYSTEM
3. VALVE POSITIONS SHOWN FOR REFERENCE ONLY. ACTUAL POSITIONS CONTROLLED BY PROCEDURES.
4. ALL INSTRUMENT TAG NUMBERS ARE PREFIXED BY SYSTEM DESIGNATOR UNLESS OTHERWISE NOTED.
5. VALVE BODY SCOPING IS IDENTIFIED ON THE LICENSE RENEWAL DRAWING FOR THE APPLICABLE SYSTEM.
6. THE PRESSURE BOUNDARY SHOWN ON THE INSTRUMENT & CONTROL AIR SYSTEM DRAWINGS INCLUDES TERMINATING COMPONENTS; FOR EXAMPLE, VALVE OPERATORS, CONTROLLERS, SOLENOIDS AND POSITIONERS. THESE ARE ACTIVE COMPONENTS (LOCATED IN NON-SAFETY-RELATED PIPING) AND ARE NOT SUBJECT TO AN AGING MANAGEMENT REVIEW.

TABLE OF ADDITIONS & CHANGES

NO	DATE	DESCRIPTION	REV'D	CHK'D	APP'D
0	01 03 08	INITIAL ISSUE FOR LICENSE RENEWAL	TW	JMC	DPC

MECHANICAL

LICENSE RENEWAL DRAWING
INSTRUMENT AIR
TURBINE BUILDING END USERS
FLOW DIAGRAM

THREE MILE ISLAND
AmerGen

SHEET 6 OF 13 | LR-302-277 | 0

DWG.NO. LR-302-277 SH. 6

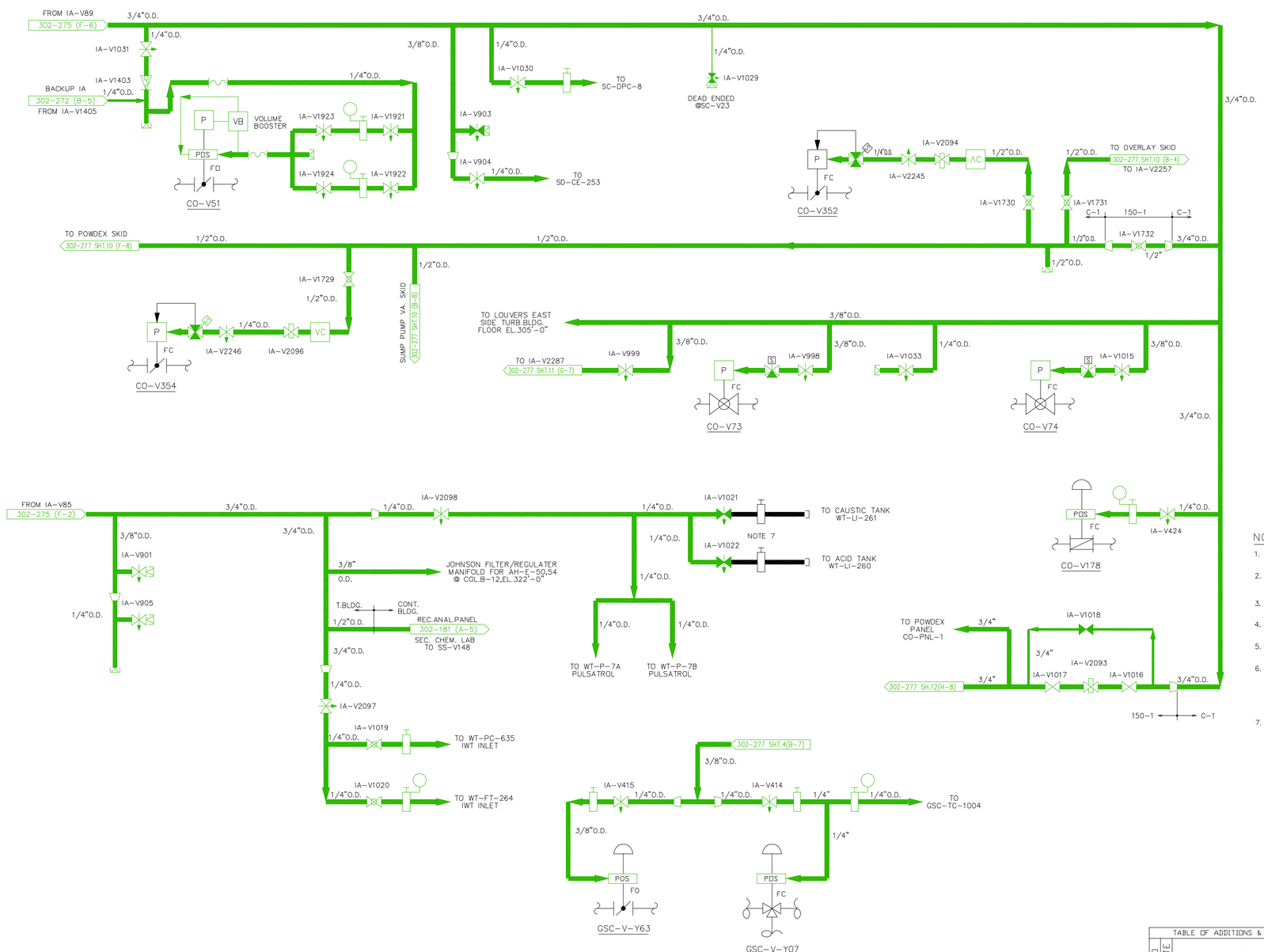

NOTES

1. THIS DRAWING IS BASED ON DRAWING 302-277, SHEET 7, REVISION 12.
2. THIS DRAWING INCLUDES THE FOLLOWING LICENSE RENEWAL SYSTEMS:
   ICA – INSTRUMENT & CONTROL AIR SYSTEM
3. VALVE POSITIONS SHOWN FOR REFERENCE ONLY. ACTUAL POSITIONS CONTROLLED BY PROCEDURES.
4. ALL INSTRUMENT TAG NUMBERS ARE PREFIXED BY SYSTEM DESIGNATOR UNLESS OTHERWISE NOTED.
5. VALVE BODY SCOPING IS IDENTIFIED ON THE LICENSE RENEWAL DRAWING FOR THE APPLICABLE SYSTEM.
6. THE PRESSURE BOUNDARY SHOWN ON THE INSTRUMENT & CONTROL AIR SYSTEM DRAWINGS INCLUDES TERMINATING COMPONENTS; FOR EXAMPLE, VALVE OPERATORS, CONTROLLERS, SOLENOIDS AND POSITIONERS. THESE ARE ACTIVE COMPONENTS (LOCATED IN NON-SAFETY-RELATED PIPING) AND ARE NOT SUBJECT TO AN AGING MANAGEMENT REVIEW.
7. THE AIR PIPING AT THIS LOCATION IS NON-SAFETY RELATED AND IS CONNECTED TO NON-SAFETY RELATED COMPONENTS; AS A DRY AIR SYSTEM, THERE IS NO POTENTIAL FOR SPATIAL INTERACTION BECAUSE ITS FAILURE COULD NOT ADVERSELY IMPACT THE PERFORMANCE OF SAFETY-RELATED SSCs.

TABLE OF ADDITIONS & CHANGES

NO	DATE	DESCRIPTION	REV'D	CHK'D	APP'D
0	01 03 08	INITIAL ISSUE FOR LICENSE RENEWAL	T W	J M C	D P C

MECHANICAL

LICENSE RENEWAL DRAWING
INSTRUMENT AIR
TURBINE BUILDING END USERS
FLOW DIAGRAM

THREE MILE ISLAND
AmerGen

SHEET 7 OF 13 | LR-302-277 | REV. 0

DWG.NO. LR-302-277 SH. 7

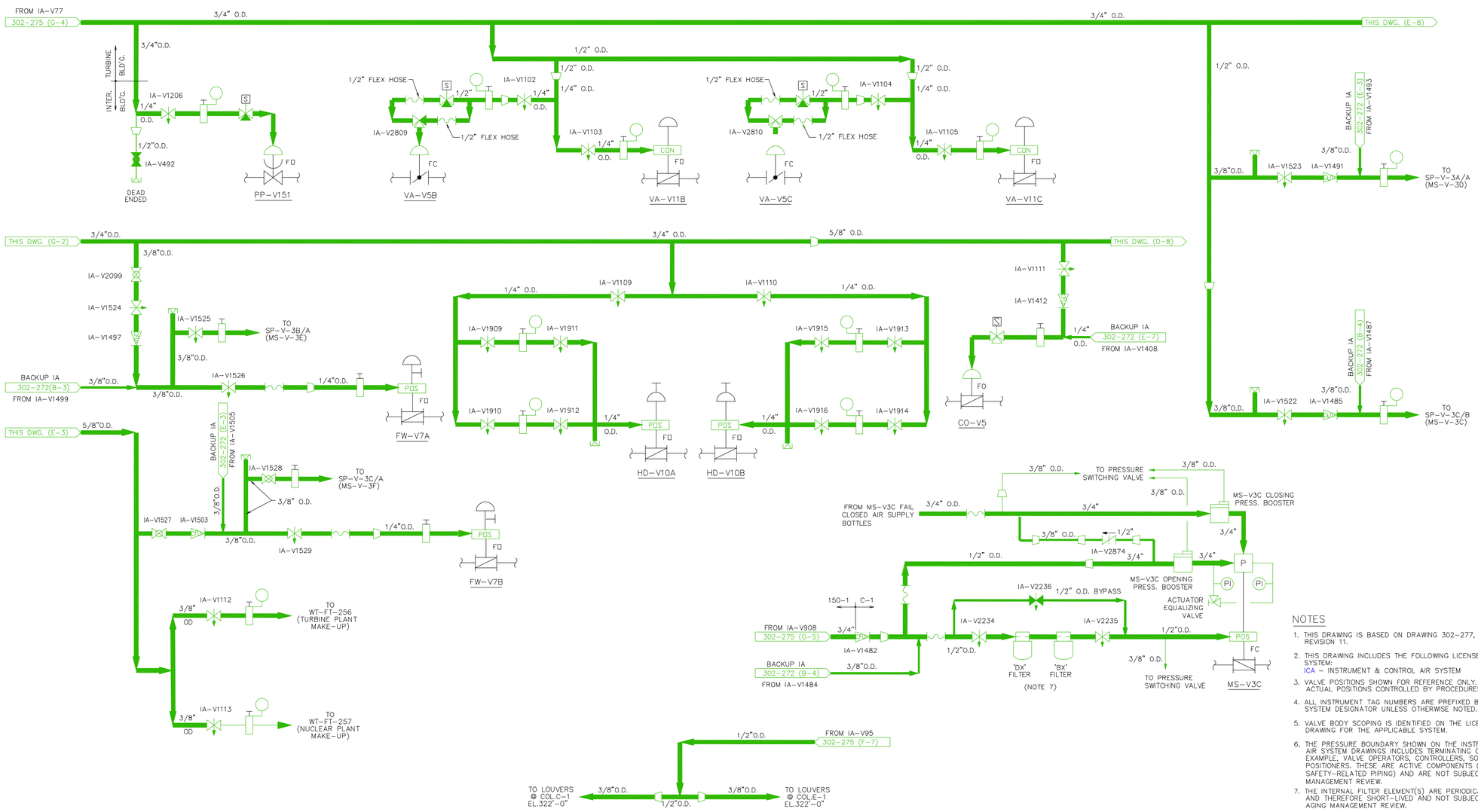

NOTES

1. THIS DRAWING IS BASED ON DRAWING 302-277, SHEET 8, REVISION 11.
2. THIS DRAWING INCLUDES THE FOLLOWING LICENSE RENEWAL SYSTEM:
   ICA - INSTRUMENT & CONTROL AIR SYSTEM
3. VALVE POSITIONS SHOWN FOR REFERENCE ONLY. ACTUAL POSITIONS CONTROLLED BY PROCEDURES.
4. ALL INSTRUMENT TAG NUMBERS ARE PREFIXED BY SYSTEM DESIGNATOR UNLESS OTHERWISE NOTED.
5. VALVE BODY SCOPING IS IDENTIFIED ON THE LICENSE RENEWAL DRAWING FOR THE APPLICABLE SYSTEM.
6. THE PRESSURE BOUNDARY SHOWN ON THE INSTRUMENT & CONTROL AIR SYSTEM DRAWINGS INCLUDES TERMINATING COMPONENTS; FOR EXAMPLE, VALVE OPERATORS, CONTROLLERS, SOLENOIDS AND POSITIONERS. THESE ARE ACTIVE COMPONENTS (LOCATED IN NON-SAFETY-RELATED PIPING) AND ARE NOT SUBJECT TO AN AGING MANAGEMENT REVIEW.
7. THE INTERNAL FILTER ELEMENT(S) ARE PERIODICALLY REPLACED AND THEREFORE SHORT-LIVED AND NOT SUBJECT TO AN AGING MANAGEMENT REVIEW.

TABLE OF ADDITIONS & CHANGES

NO	DATE	DESCRIPTION	REV'D	CHK'D	APP'D
0	01 03 08	INITIAL ISSUE FOR LICENSE RENEWAL	T W	J M C	D P C

MECHANICAL

LICENSE RENEWAL DRAWING
INSTRUMENT AIR
TURBINE BUILDING END USERS
FLOW DIAGRAM

THREE MILE ISLAND
AmerGen

SHEET 8 OF 13 LR-302-277 REV 0

DWG.NO. LR-302-277 SH. 8

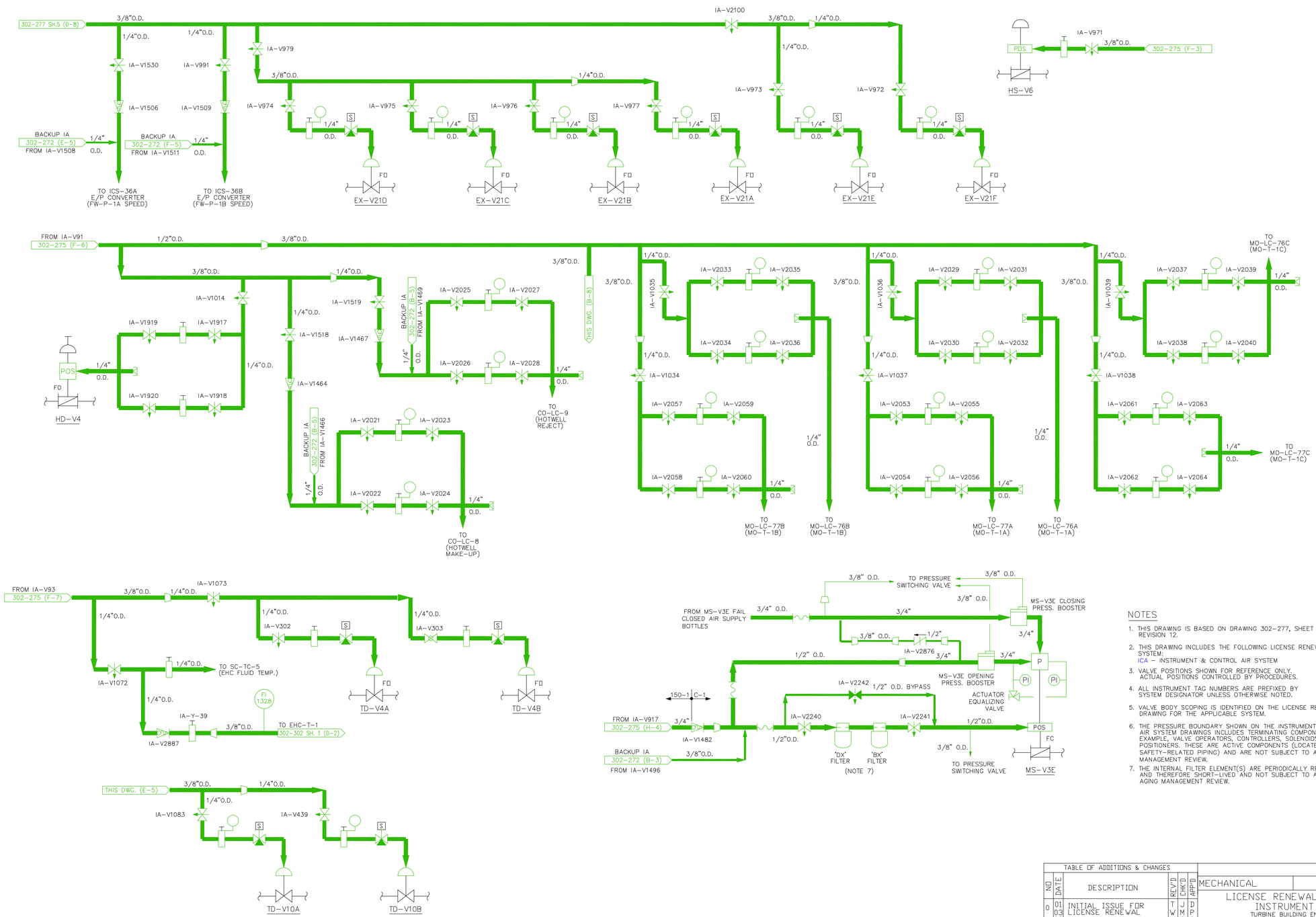

NOTES

1. THIS DRAWING IS BASED ON DRAWING 302-277, SHEET 9, REVISION 12.
2. THIS DRAWING INCLUDES THE FOLLOWING LICENSE RENEWAL SYSTEM:
   ICA – INSTRUMENT & CONTROL AIR SYSTEM
3. VALVE POSITIONS SHOWN FOR REFERENCE ONLY. ACTUAL POSITIONS CONTROLLED BY PROCEDURES.
4. ALL INSTRUMENT TAG NUMBERS ARE PREFIXED BY SYSTEM DESIGNATOR UNLESS OTHERWISE NOTED.
5. VALVE BODY SCOPING IS IDENTIFIED ON THE LICENSE RENEWAL DRAWING FOR THE APPLICABLE SYSTEM.
6. THE PRESSURE BOUNDARY SHOWN ON THE INSTRUMENT & CONTROL AIR SYSTEM DRAWINGS INCLUDES TERMINATING COMPONENTS; FOR EXAMPLE, VALVE OPERATORS, CONTROLLERS, SOLENOIDS AND POSITIONERS. THESE ARE ACTIVE COMPONENTS (LOCATED IN NON-SAFETY-RELATED PIPING) AND ARE NOT SUBJECT TO AN AGING MANAGEMENT REVIEW.
7. THE INTERNAL FILTER ELEMENT(S) ARE PERIODICALLY REPLACED AND THEREFORE SHORT-LIVED AND NOT SUBJECT TO AN AGING MANAGEMENT REVIEW.

TABLE OF ADDITIONS & CHANGES

NO	DATE	DESCRIPTION	REV'D	CHK'D	APP'D
0	01 03 08	INITIAL ISSUE FOR LICENSE RENEWAL	TW	JMC	DPC

MECHANICAL

LICENSE RENEWAL DRAWING
INSTRUMENT AIR
TURBINE BUILDING END USERS
FLOW DIAGRAM

THREE MILE ISLAND
AmerGen

SHEET 9 OF 13 LR-302-277 REV 0

DWG.NO. LR-302-277 SH. 9

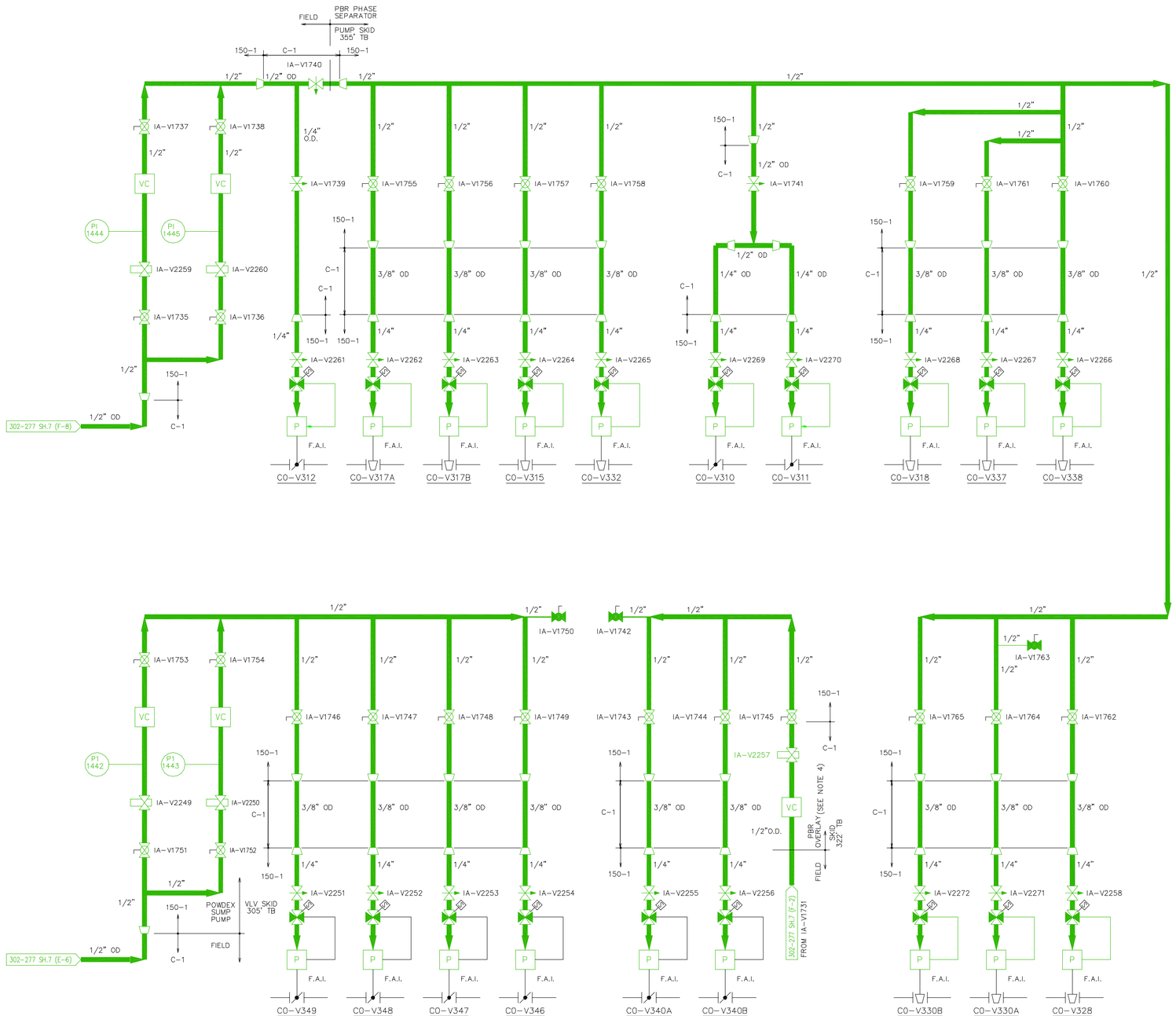

NOTES

1. THIS DRAWING IS BASED ON DRAWING 302-277, SHEET 10, REVISION 3.
2. THIS DRAWING INCLUDES THE FOLLOWING LICENSE RENEWAL SYSTEM:
   ICA – INSTRUMENT & CONTROL AIR SYSTEM
3. VALVE POSITIONS SHOWN FOR REFERENCE ONLY. ACTUAL POSITIONS CONTROLLED BY PROCEDURES.
4. ALL INSTRUMENT TAG NUMBERS ARE PREFIXED BY SYSTEM DESIGNATOR UNLESS OTHERWISE NOTED.
5. VALVE BODY SCOPING IS IDENTIFIED ON THE LICENSE RENEWAL DRAWING FOR THE APPLICABLE SYSTEM.
6. THE PRESSURE BOUNDARY SHOWN ON THE INSTRUMENT & CONTROL AIR SYSTEM DRAWINGS INCLUDES TERMINATING COMPONENTS; FOR EXAMPLE, VALVE OPERATORS, CONTROLLERS, SOLENOIDS AND POSITIONERS. THESE ARE ACTIVE COMPONENTS (LOCATED IN NON-SAFETY-RELATED PIPING) AND ARE NOT SUBJECT TO AN AGING MANAGEMENT REVIEW.

TABLE OF ADDITIONS & CHANGES

NO	DATE	DESCRIPTION	REV'D	CHK'D	APP'D
0	01 03 03	INITIAL ISSUE FOR LICENSE RENEWAL	T W	J M C	D P C

MECHANICAL

LICENSE RENEWAL DRAWING
INSTRUMENT AIR
TURBINE BUILDING END USERS
FLOW DIAGRAM

THREE MILE ISLAND
AmerGen

SHEET 10 OF 13 LR-302-277 REV 0

DWG.NO. LR-302-277 SH. 10

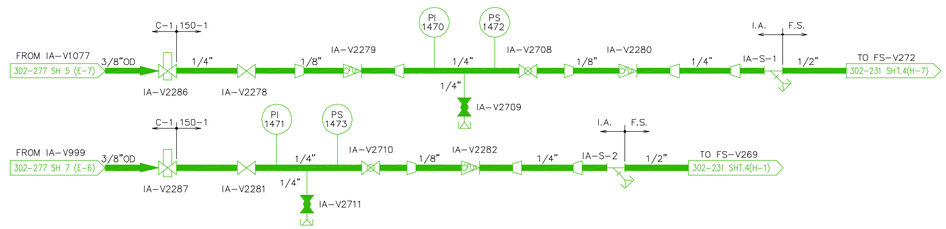

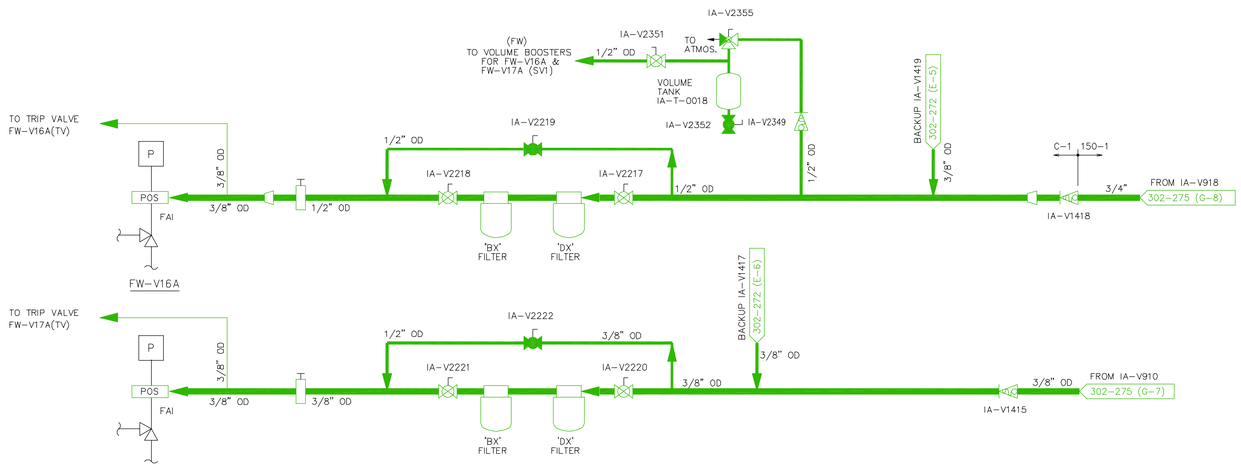

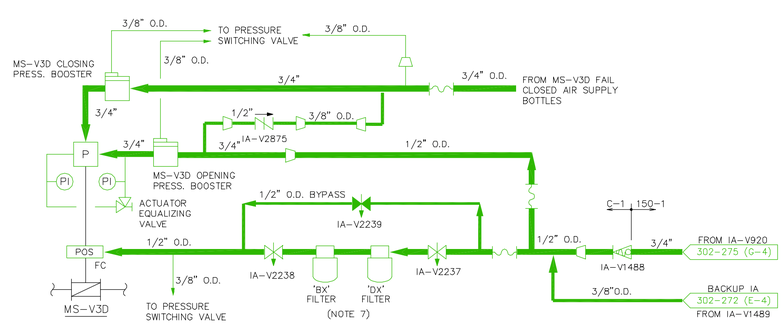

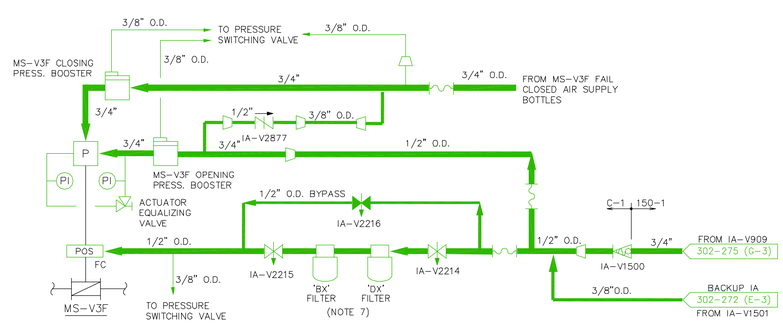

NOTES

1. THIS DRAWING IS BASED ON DRAWING 302-277, SHEET 11, REVISION 13.
2. THIS DRAWING INCLUDES THE FOLLOWING LICENSE RENEWAL SYSTEM:
   ICA – INSTRUMENT & CONTROL AIR SYSTEM
3. VALVE POSITIONS SHOWN FOR REFERENCE ONLY. ACTUAL POSITIONS CONTROLLED BY PROCEDURES.
4. ALL INSTRUMENT TAG NUMBERS ARE PREFIXED BY SYSTEM DESIGNATOR UNLESS OTHERWISE NOTED.
5. VALVE BODY SCOPING IS IDENTIFIED ON THE LICENSE RENEWAL DRAWING FOR THE APPLICABLE SYSTEM.
6. THE PRESSURE BOUNDARY SHOWN ON THE INSTRUMENT & CONTROL AIR SYSTEM DRAWINGS INCLUDES TERMINATING COMPONENTS; FOR EXAMPLE, VALVE OPERATORS, CONTROLLERS, SOLENOIDS AND POSITIONERS. THESE ARE ACTIVE COMPONENTS (LOCATED IN NON-SAFETY-RELATED PIPING) AND ARE NOT SUBJECT TO AN AGING MANAGEMENT REVIEW.
7. THE INTERNAL FILTER ELEMENT(S) ARE PERIODICALLY REPLACED AND THEREFORE SHORT-LIVED AND NOT SUBJECT TO AN AGING MANAGEMENT REVIEW.

TABLE OF ADDITIONS & CHANGES

NO.	DATE	DESCRIPTION	REV'D	CHK'D	APP'D
0	01 03 08	INITIAL ISSUE FOR LICENSE RENEWAL	T W	J M C	D P C

MECHANICAL

LICENSE RENEWAL DRAWING
INSTRUMENT AIR
TURBINE BUILDING END USERS
FLOW DIAGRAM

THREE MILE ISLAND
AmerGen

SHEET 11 OF 13 | LR-302-277 | REV 0

DWG.NO. LR-302-277 SH. 11

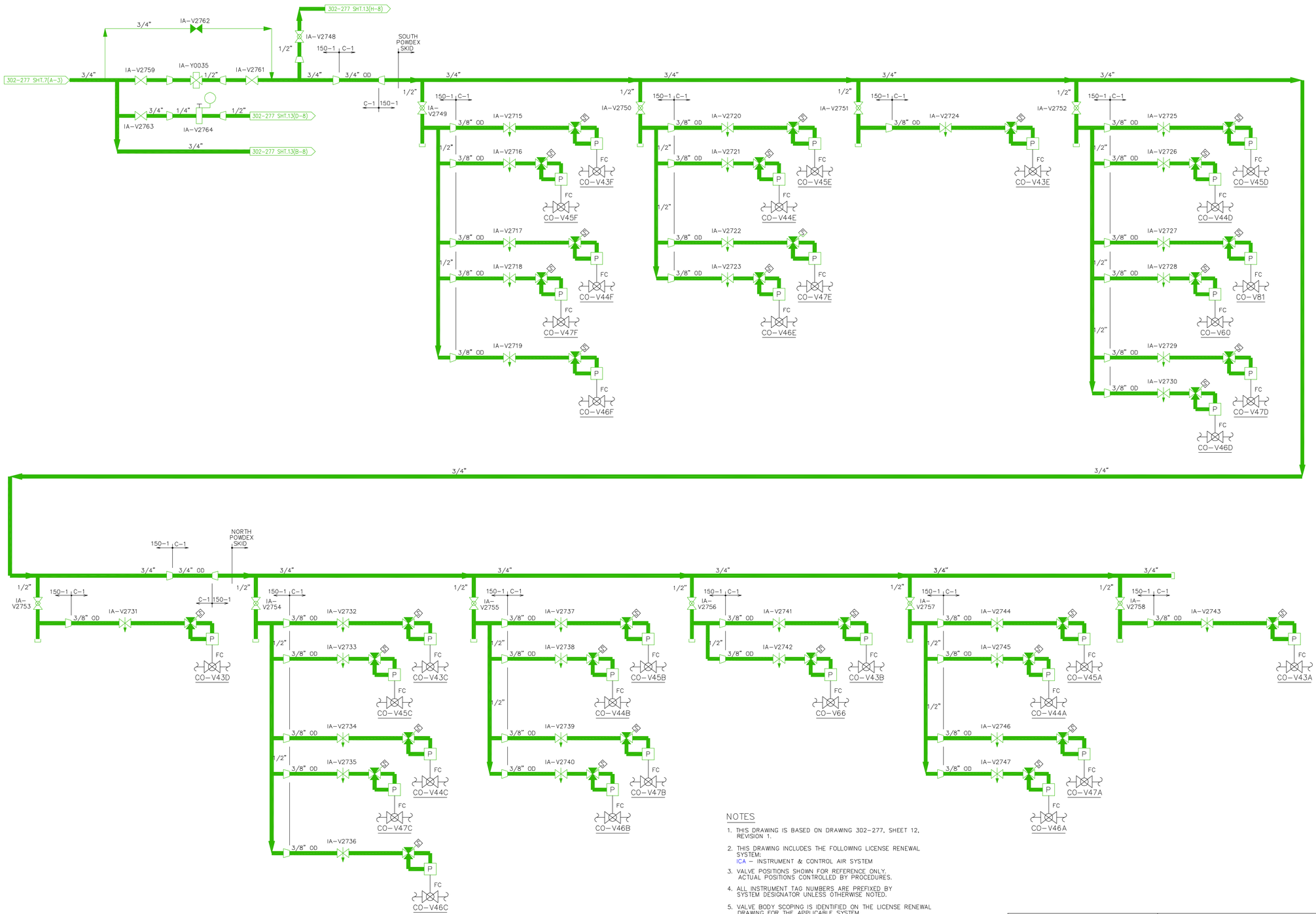

NOTES

1. THIS DRAWING IS BASED ON DRAWING 302-277, SHEET 12, REVISION 1.
2. THIS DRAWING INCLUDES THE FOLLOWING LICENSE RENEWAL SYSTEM:
   ICA – INSTRUMENT & CONTROL AIR SYSTEM
3. VALVE POSITIONS SHOWN FOR REFERENCE ONLY. ACTUAL POSITIONS CONTROLLED BY PROCEDURES.
4. ALL INSTRUMENT TAG NUMBERS ARE PREFIXED BY SYSTEM DESIGNATOR UNLESS OTHERWISE NOTED.
5. VALVE BODY SCOPING IS IDENTIFIED ON THE LICENSE RENEWAL DRAWING FOR THE APPLICABLE SYSTEM.
6. THE PRESSURE BOUNDARY SHOWN ON THE INSTRUMENT & CONTROL AIR SYSTEM DRAWINGS INCLUDES TERMINATING COMPONENTS; FOR EXAMPLE, VALVE OPERATORS, CONTROLLERS, SOLENOIDS AND POSITIONERS. THESE ARE ACTIVE COMPONENTS (LOCATED IN NON-SAFETY-RELATED PIPING) AND ARE NOT SUBJECT TO AN AGING MANAGEMENT REVIEW.

TABLE OF ADDITIONS & CHANGES

NO	DATE	DESCRIPTION	REV'D	CHK'D	APP'D
0	01 03 08	INITIAL ISSUE FOR LICENSE RENEWAL	T W	J M C	D P C

MECHANICAL

LICENSE RENEWAL DRAWING
INSTRUMENT AIR
TURBINE BUILDING
FLOW DIAGRAM

THREE MILE ISLAND
AmerGen

SHEET 12 OF 13 | LR-302-277 | REV 0

DWG.NO. LR-302-277 | SH. 12

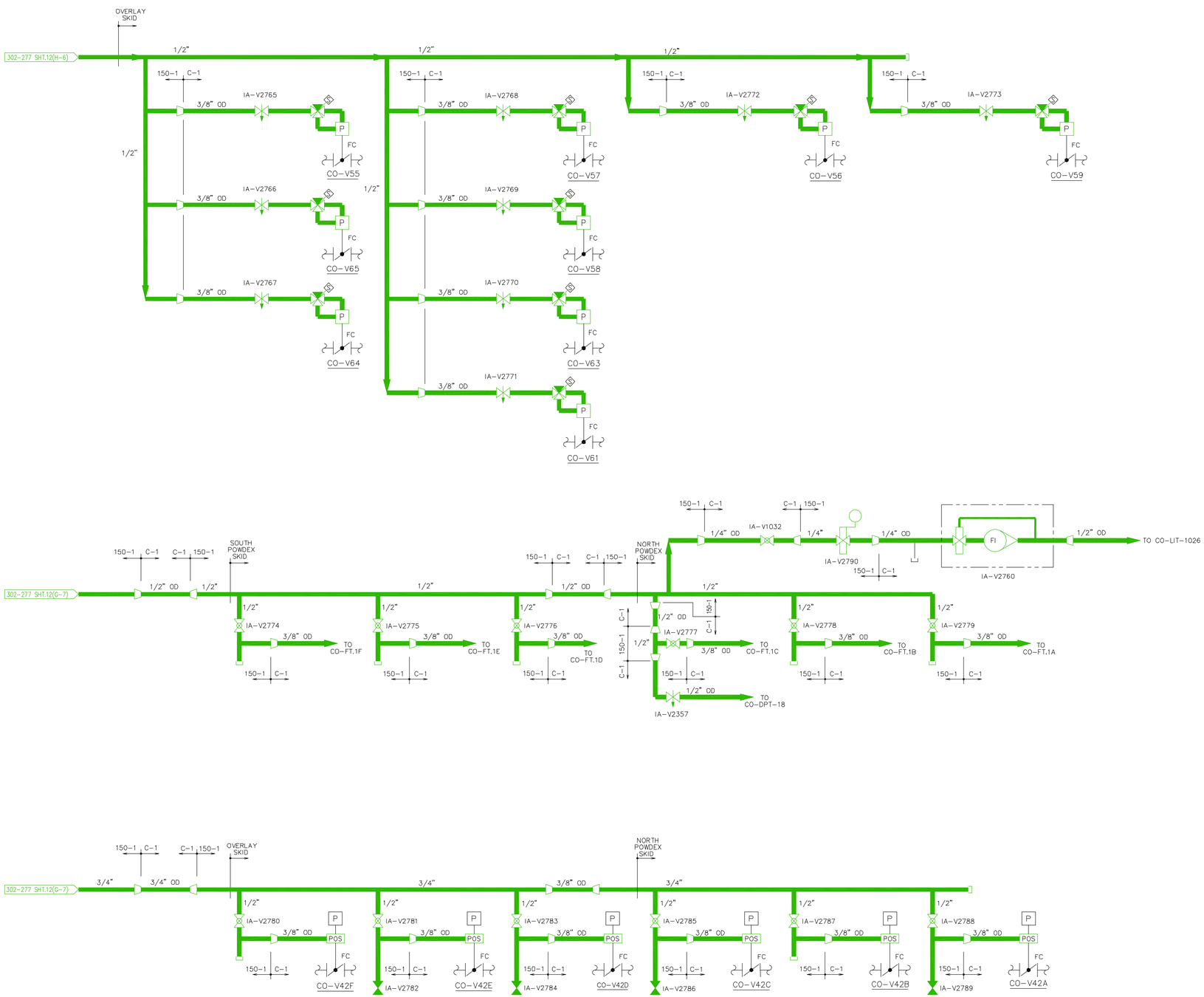

NOTES

1. THIS DRAWING IS BASED ON DRAWING 302-277, SHEET 13, REVISION 2.
2. THIS DRAWING INCLUDES THE FOLLOWING LICENSE RENEWAL SYSTEM:
   ICA – INSTRUMENT & CONTROL AIR SYSTEM
3. VALVE POSITIONS SHOWN FOR REFERENCE ONLY. ACTUAL POSITIONS CONTROLLED BY PROCEDURES.
4. ALL INSTRUMENT TAG NUMBERS ARE PREFIXED BY SYSTEM DESIGNATOR UNLESS OTHERWISE NOTED.
5. VALVE BODY SCOPING IS IDENTIFIED ON THE LICENSE RENEWAL DRAWING FOR THE APPLICABLE SYSTEM.
6. THE PRESSURE BOUNDARY SHOWN ON THE INSTRUMENT & CONTROL AIR SYSTEM DRAWINGS INCLUDES TERMINATING COMPONENTS; FOR EXAMPLE, VALVE OPERATORS, CONTROLLERS, SOLENOIDS AND POSITIONERS. THESE ARE ACTIVE COMPONENTS (LOCATED IN NON-SAFETY-RELATED PIPING) AND ARE NOT SUBJECT TO AN AGING MANAGEMENT REVIEW.

TABLE OF ADDITIONS & CHANGES

NO	DATE	DESCRIPTION	REV'D	CHK'D	APP'D
0	01 03 08	INITIAL ISSUE FOR LICENSE RENEWAL	T W	J M C	D P C

MECHANICAL

LICENSE RENEWAL DRAWING
INSTRUMENT AIR
TURBINE BUILDING
FLOW DIAGRAM

THREE MILE ISLAND
AmerGen

SHEET 13 OF 13 LR-302-277 REV 0

DWG.NO. LR-302-277 SH. 13

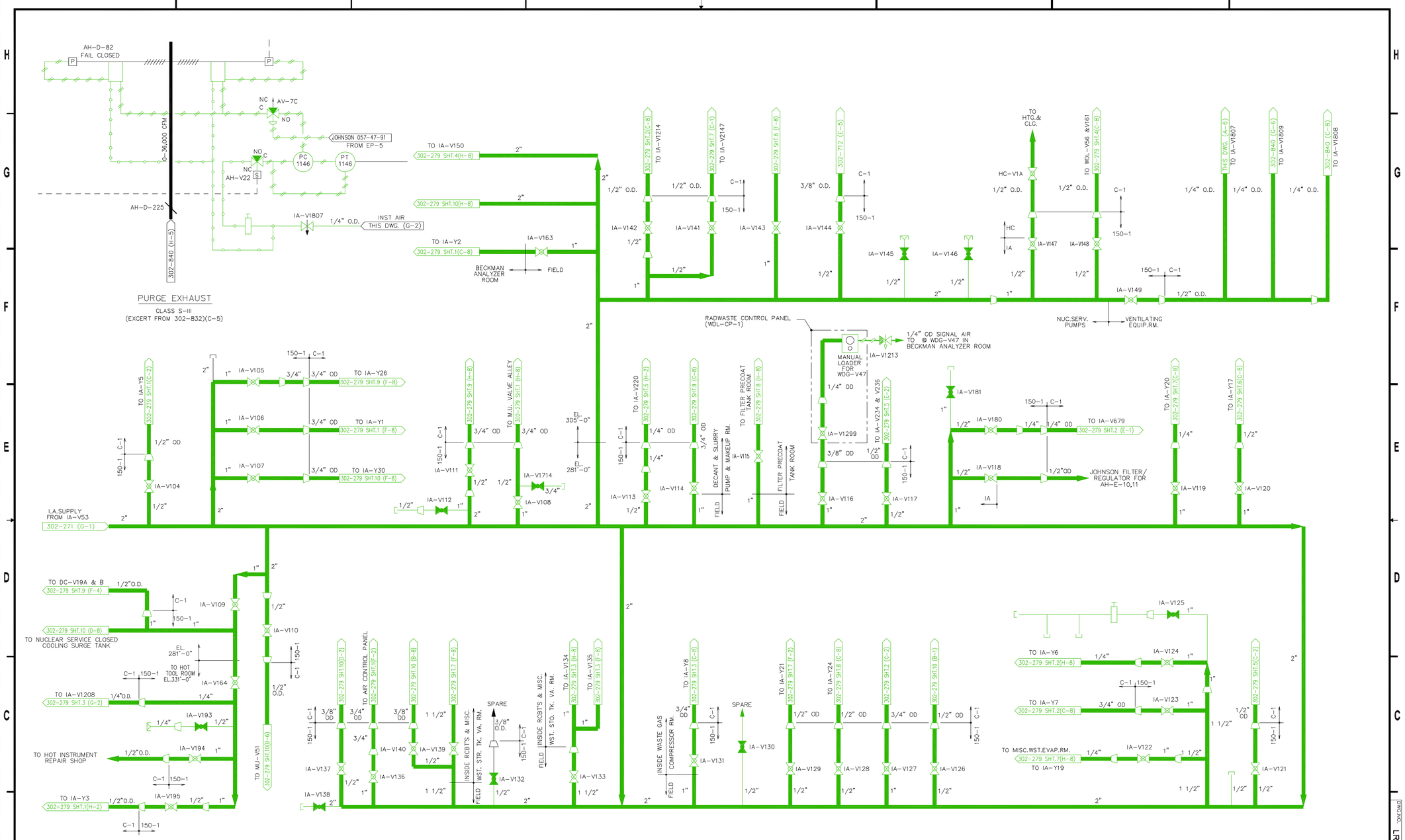

NOTES

1. THIS DRAWING IS BASED ON DRAWING 302-278, REVISION 10.
2. THIS DRAWING INCLUDES THE FOLLOWING LICENSE RENEWAL SYSTEM:
   ICA – INSTRUMENT & CONTROL AIR SYSTEM
3. VALVE POSITIONS SHOWN FOR REFERENCE ONLY. ACTUAL POSITIONS CONTROLLED BY PROCEDURES.
4. ALL INSTRUMENT TAG NUMBERS ARE PREFIXED BY SYSTEM DESIGNATOR UNLESS OTHERWISE NOTED.
5. VALVE BODY SCOPING IS IDENTIFIED ON THE LICENCE RENEWAL DRAWING FOR THE APPLICABLE SYSTEM.
6. THE PRESSURE BOUNDARY SHOWN ON THE INSTRUMENT & CONTROL AIR SYSTEM DRAWINGS INCLUDES TERMINATING COMPONENTS; FOR EXAMPLE, VALVE OPERATORS, CONTROLLERS, SOLENOIDS AND POSITIONERS. THESE ARE ACTIVE COMPONENTS (LOCATED IN NON-SAFETY-RELATED PIPING) AND ARE NOT SUBJECT TO AN AGING MANAGEMENT REVIEW.

TABLE OF ADDITIONS & CHANGES

NO	DATE	DESCRIPTION	REV'D	CHK'D	APP'D
0	01 03 08	INITIAL ISSUE FOR LICENSE RENEWAL	T W	J M C	D P C

MECHANICAL

LICENSE RENEWAL DRAWING
INSTRUMENT AIR
AUXILIARY BUILDING HEADERS
FLOW DIAGRAM

THREE MILE ISLAND
AmerGen

SHEET 1 OF 1 LR-302-278 REV 0

DWG.NO. LR-302-278 SH. 1

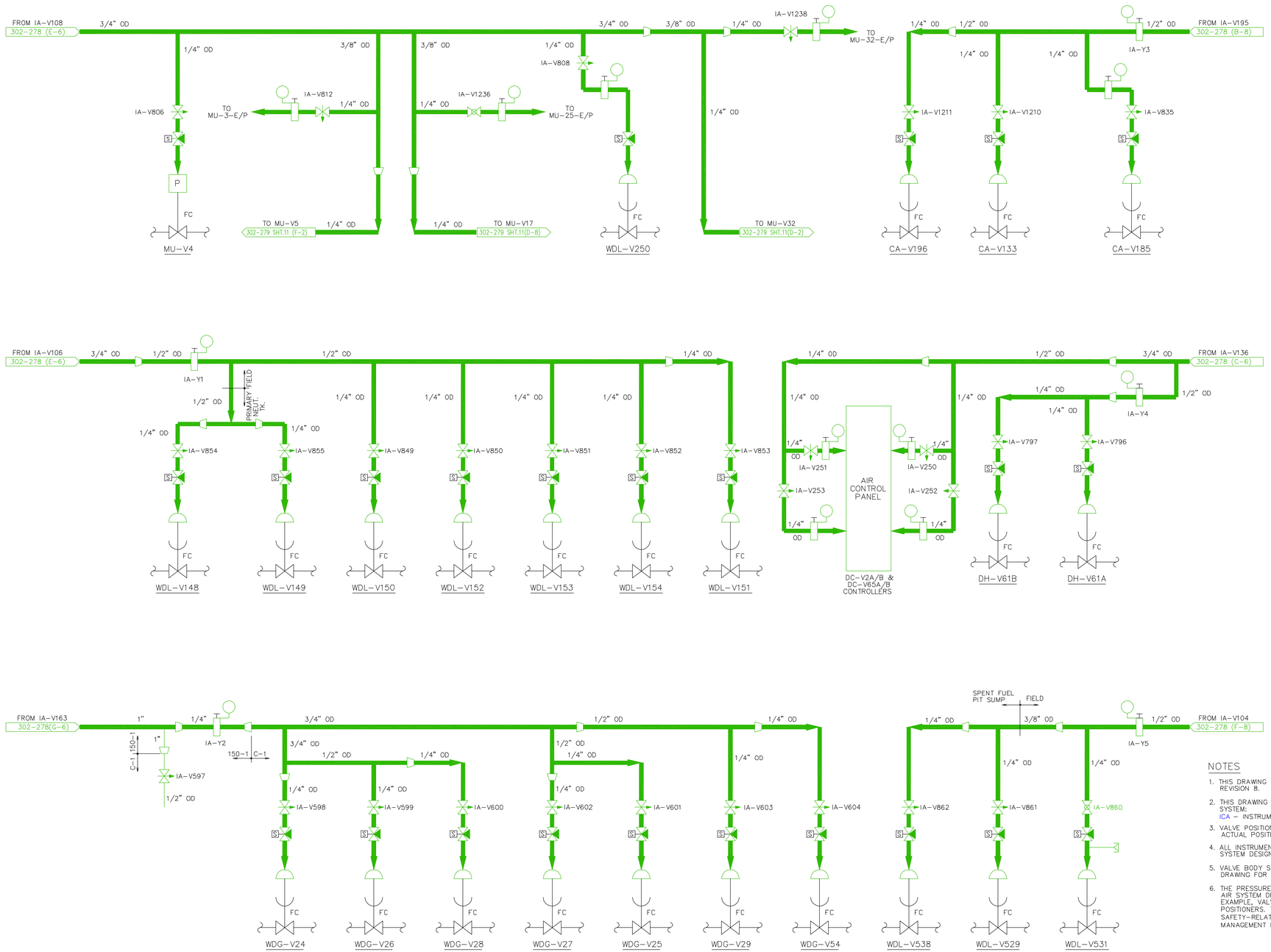

NOTES

1. THIS DRAWING IS BASED ON DRAWING 302-279, SHEET 1, REVISION 8.
2. THIS DRAWING INCLUDES THE FOLLOWING LICENSE RENEWAL SYSTEM:
   ICA – INSTRUMENT & CONTROL AIR SYSTEM
3. VALVE POSITIONS SHOWN FOR REFERENCE ONLY. ACTUAL POSITIONS CONTROLLED BY PROCEDURES.
4. ALL INSTRUMENT TAG NUMBERS ARE PREFIXED BY SYSTEM DESIGNATOR UNLESS OTHERWISE NOTED.
5. VALVE BODY SCOPING IS IDENTIFIED ON THE LICENSE RENEWAL DRAWING FOR THE APPLICABLE SYSTEM.
6. THE PRESSURE BOUNDARY SHOWN ON THE INSTRUMENT & CONTROL AIR SYSTEM DRAWINGS INCLUDES TERMINATING COMPONENTS; FOR EXAMPLE, VALVE OPERATORS, CONTROLLERS, SOLENOIDS AND POSITIONERS. THESE ARE ACTIVE COMPONENTS (LOCATED IN NON-SAFETY-RELATED PIPING) AND ARE NOT SUBJECT TO AN AGING MANAGEMENT REVIEW.

TABLE OF ADDITIONS & CHANGES

NO	DATE	DESCRIPTION	REV'D	CHK'D	APP'D
0	01 03 03	INITIAL ISSUE FOR LICENSE RENEWAL	T W	J M C	D P C

MECHANICAL

LICENSE RENEWAL DRAWING
INSTRUMENT AIR
AUX. BUILDING END USERS
FLOW DIAGRAM

THREE MILE ISLAND
AmerGen

SHEET 1 OF 11 LR-302-279 REV. 0

DWG.NO. LR-302-279 SH. 1

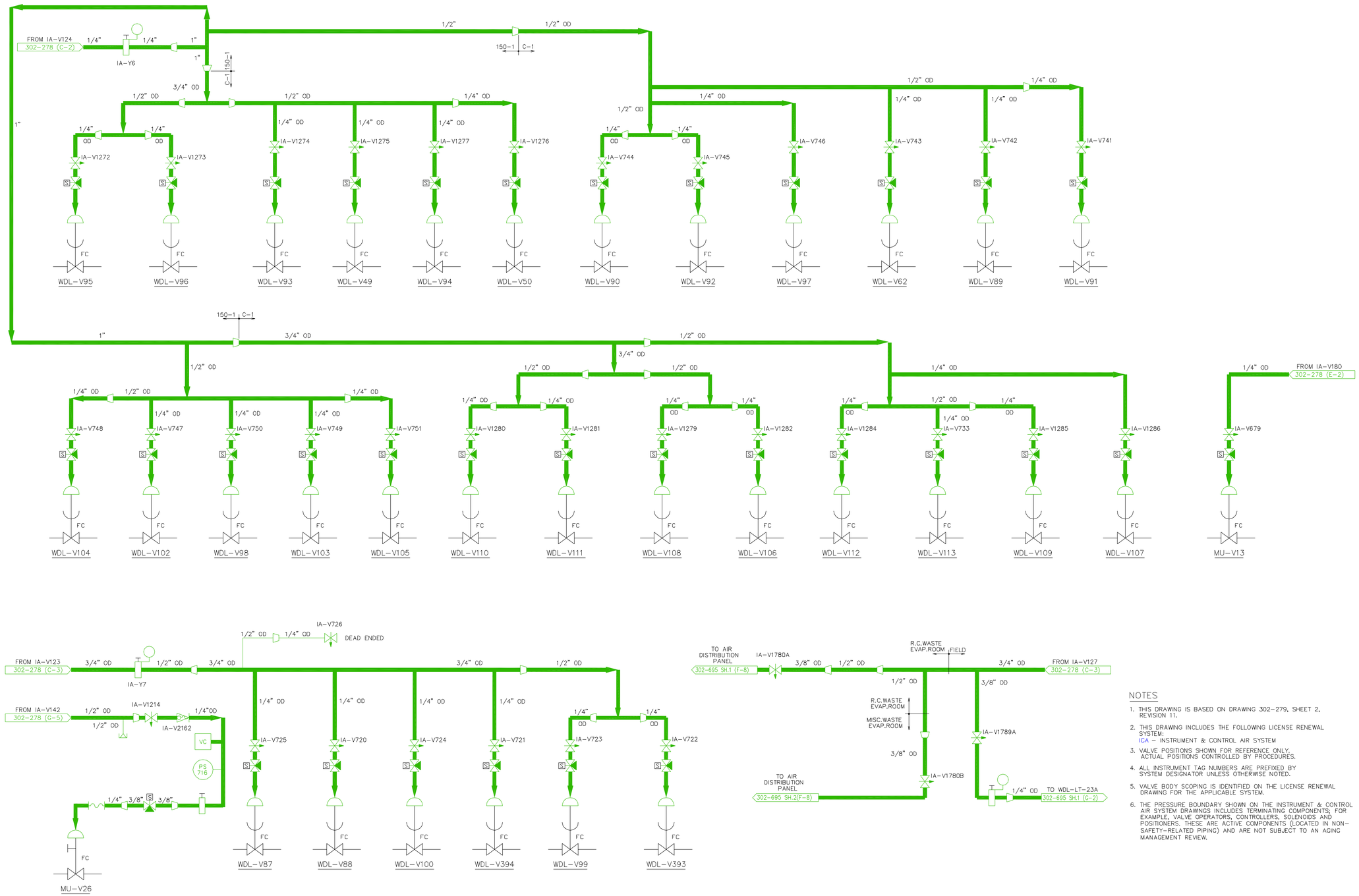

NOTES

1. THIS DRAWING IS BASED ON DRAWING 302-279, SHEET 2, REVISION 11.
2. THIS DRAWING INCLUDES THE FOLLOWING LICENSE RENEWAL SYSTEM:
   ICA – INSTRUMENT & CONTROL AIR SYSTEM
3. VALVE POSITIONS SHOWN FOR REFERENCE ONLY. ACTUAL POSITIONS CONTROLLED BY PROCEDURES.
4. ALL INSTRUMENT TAG NUMBERS ARE PREFIXED BY SYSTEM DESIGNATOR UNLESS OTHERWISE NOTED.
5. VALVE BODY SCOPING IS IDENTIFIED ON THE LICENSE RENEWAL DRAWING FOR THE APPLICABLE SYSTEM.
6. THE PRESSURE BOUNDARY SHOWN ON THE INSTRUMENT & CONTROL AIR SYSTEM DRAWINGS INCLUDES TERMINATING COMPONENTS; FOR EXAMPLE, VALVE OPERATORS, CONTROLLERS, SOLENOIDS AND POSITIONERS. THESE ARE ACTIVE COMPONENTS (LOCATED IN NON-SAFETY-RELATED PIPING) AND ARE NOT SUBJECT TO AN AGING MANAGEMENT REVIEW.

TABLE OF ADDITIONS & CHANGES

NO	DATE	DESCRIPTION	REV'D	CHK'D	APP'D
0	01 03 08	INITIAL ISSUE FOR LICENSE RENEWAL	T W	J M C	D P C

MECHANICAL

LICENSE RENEWAL DRAWING
INSTRUMENT AIR
AUXILIARY BUILDING END USERS
FLOW DIAGRAM

THREE MILE ISLAND
AmerGen

SHEET 2 OF 11 LR-302-279 REV 0

DWG.NO. LR-302-279 SH. 2

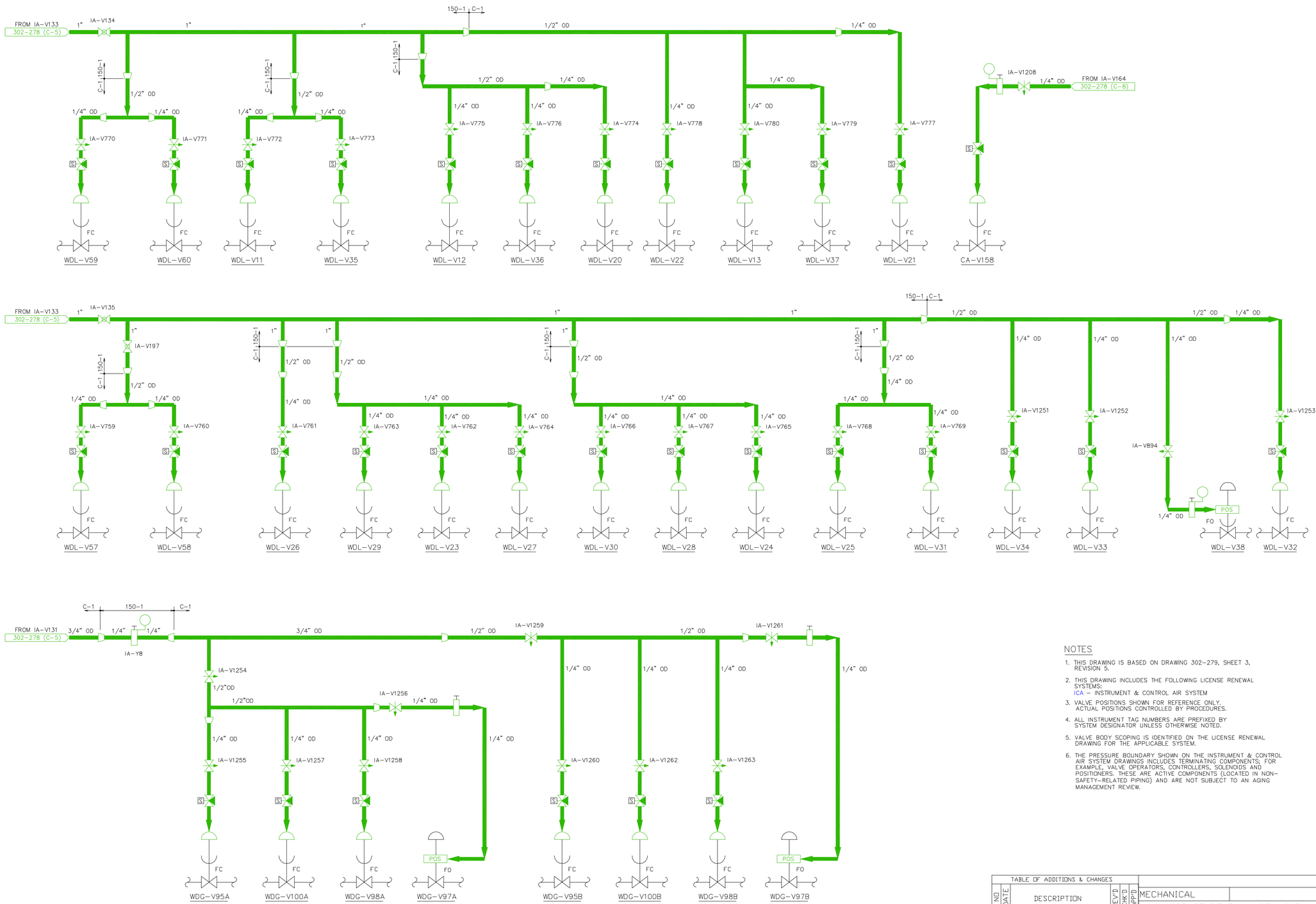

NOTES

1. THIS DRAWING IS BASED ON DRAWING 302-279, SHEET 3, REVISION 5.
2. THIS DRAWING INCLUDES THE FOLLOWING LICENSE RENEWAL SYSTEMS:
   ICA – INSTRUMENT & CONTROL AIR SYSTEM
3. VALVE POSITIONS SHOWN FOR REFERENCE ONLY. ACTUAL POSITIONS CONTROLLED BY PROCEDURES.
4. ALL INSTRUMENT TAG NUMBERS ARE PREFIXED BY SYSTEM DESIGNATOR UNLESS OTHERWISE NOTED.
5. VALVE BODY SCOPING IS IDENTIFIED ON THE LICENSE RENEWAL DRAWING FOR THE APPLICABLE SYSTEM.
6. THE PRESSURE BOUNDARY SHOWN ON THE INSTRUMENT & CONTROL AIR SYSTEM DRAWINGS INCLUDES TERMINATING COMPONENTS; FOR EXAMPLE, VALVE OPERATORS, CONTROLLERS, SOLENOIDS AND POSITIONERS. THESE ARE ACTIVE COMPONENTS (LOCATED IN NON-SAFETY-RELATED PIPING) AND ARE NOT SUBJECT TO AN AGING MANAGEMENT REVIEW.

TABLE OF ADDITIONS & CHANGES

NO	DATE	DESCRIPTION	REV'D	CHK'D	APP'D
0	01 03 08	INITIAL ISSUE FOR LICENSE RENEWAL	T W	J M C	D P C

MECHANICAL

LICENSE RENEWAL DRAWING
INSTRUMENT AIR
AUX. BUILDING END USERS
FLOW DIAGRAM

THREE MILE ISLAND
AmerGen

SHEET 3 OF 11 | LR-302-279 | REV 0

DWG.NO. LR-302-279 SH. 3

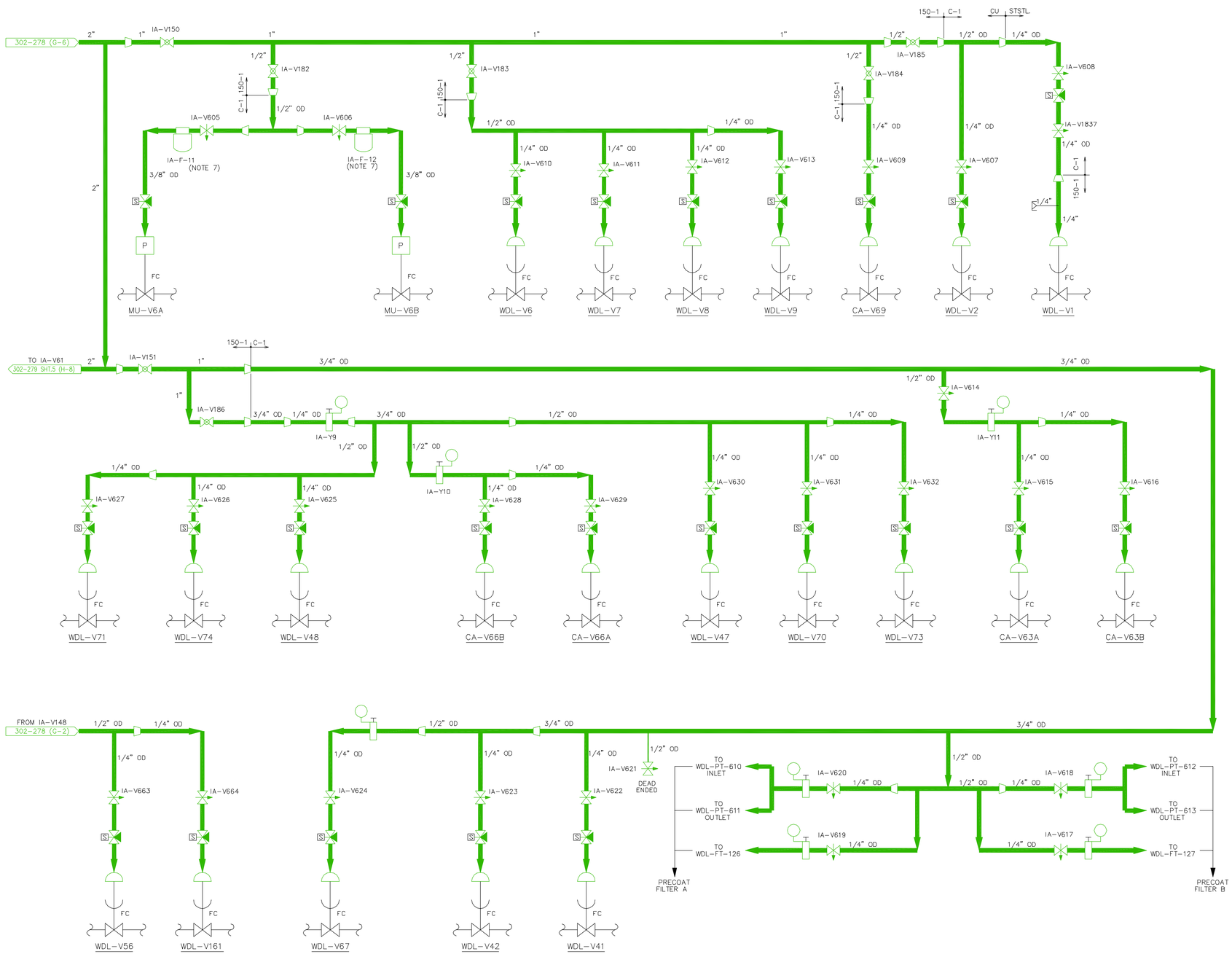

NOTES

1. THIS DRAWING IS BASED ON DRAWING 302-279, SHEET 4 REVISION 9.
2. THIS DRAWING INCLUDES THE FOLLOWING LICENSE RENEWAL SYSTEMS:
   ICA – INSTRUMENT & CONTROL AIR SYSTEM
3. VALVE POSITIONS SHOWN FOR REFERENCE ONLY. ACTUAL POSITIONS CONTROLLED BY PROCEDURES.
4. ALL INSTRUMENT TAG NUMBERS ARE PREFIXED BY SYSTEM DESIGNATOR UNLESS OTHERWISE NOTED.
5. VALVE BODY SCOPING IS IDENTIFIED ON THE LICENSE RENEWAL DRAWING FOR THE APPLICABLE SYSTEM.
6. THE PRESSURE BOUNDARY SHOWN ON THE INSTRUMENT & CONTROL AIR SYSTEM DRAWINGS INCLUDES TERMINATING COMPONENTS; FOR EXAMPLE, VALVE OPERATORS, CONTROLLERS, SOLENOIDS AND POSITIONERS. THESE ARE ACTIVE COMPONENTS (LOCATED IN NON-SAFETY-RELATED PIPING) AND ARE NOT SUBJECT TO AN AGING MANAGEMENT REVIEW.
7. THE INTERNAL FILTER ELEMENT(S) ARE PERIODICALLY REPLACED AND THEREFORE SHORT-LIVED AND NOT SUBJECT TO AN AGING MANAGEMENT REVIEW.

TABLE OF ADDITIONS & CHANGES

NO	DATE	DESCRIPTION	REV'D	CHK'D	APP'D
0	01 03 08	INITIAL ISSUE FOR LICENSE RENEWAL	T W	J M C	D P C

MECHANICAL

LICENSE RENEWAL DRAWING
INSTRUMENT AIR
AUX. BUILDING END USERS
FLOW DIAGRAM

THREE MILE ISLAND
AmerGen

SHEET 4 OF 11 LR-302-279 REV. 0

DWG.NO. LR-302-279 SH. 4

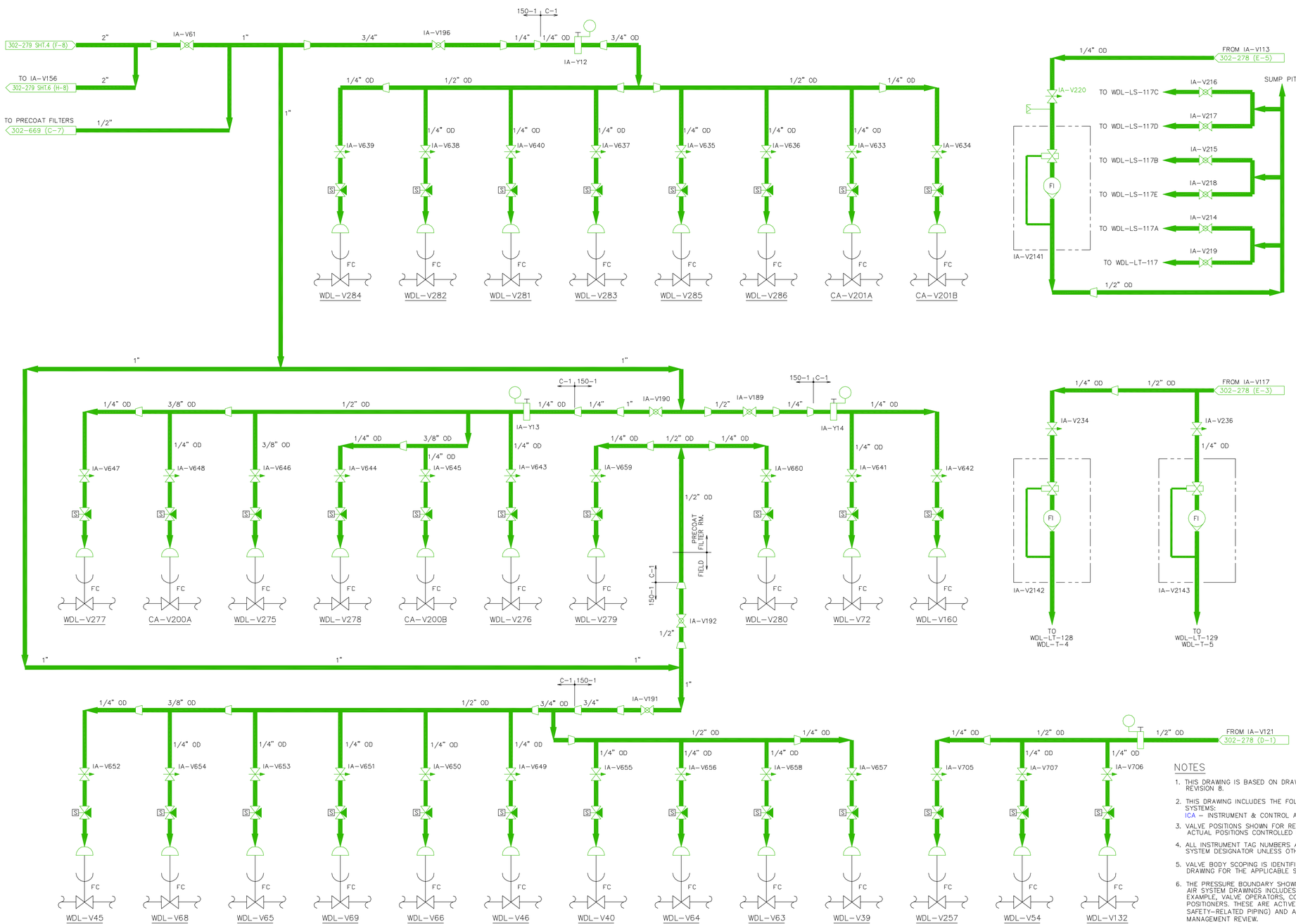

NOTES

1. THIS DRAWING IS BASED ON DRAWING 302-279, SHEET 5, REVISION 8.
2. THIS DRAWING INCLUDES THE FOLLOWING LICENSE RENEWAL SYSTEMS:
   ICA – INSTRUMENT & CONTROL AIR SYSTEM
3. VALVE POSITIONS SHOWN FOR REFERENCE ONLY. ACTUAL POSITIONS CONTROLLED BY PROCEDURES.
4. ALL INSTRUMENT TAG NUMBERS ARE PREFIXED BY SYSTEM DESIGNATOR UNLESS OTHERWISE NOTED.
5. VALVE BODY SCOPING IS IDENTIFIED ON THE LICENSE RENEWAL DRAWING FOR THE APPLICABLE SYSTEM.
6. THE PRESSURE BOUNDARY SHOWN ON THE INSTRUMENT & CONTROL AIR SYSTEM DRAWINGS INCLUDES TERMINATING COMPONENTS; FOR EXAMPLE, VALVE OPERATORS, CONTROLLERS, SOLENOIDS AND POSITIONERS. THESE ARE ACTIVE COMPONENTS (LOCATED IN NON-SAFETY-RELATED PIPING) AND ARE NOT SUBJECT TO AN AGING MANAGEMENT REVIEW.

TABLE OF ADDITIONS & CHANGES

NO	DATE	DESCRIPTION	REV'D	CHK'D	APP'D
0	01 00 00	INITIAL ISSUE FOR LICENSE RENEWAL	T W	J M C	D P C

MECHANICAL

LICENSE RENEWAL DRAWING
INSTRUMENT AIR
AUX. BUILDING END USERS
FLOW DIAGRAM

THREE MILE ISLAND
AmerGen

SHEET 5 OF 11 LR-302-279 REV 0

DWG.NO. LR-302-279 SH. 5

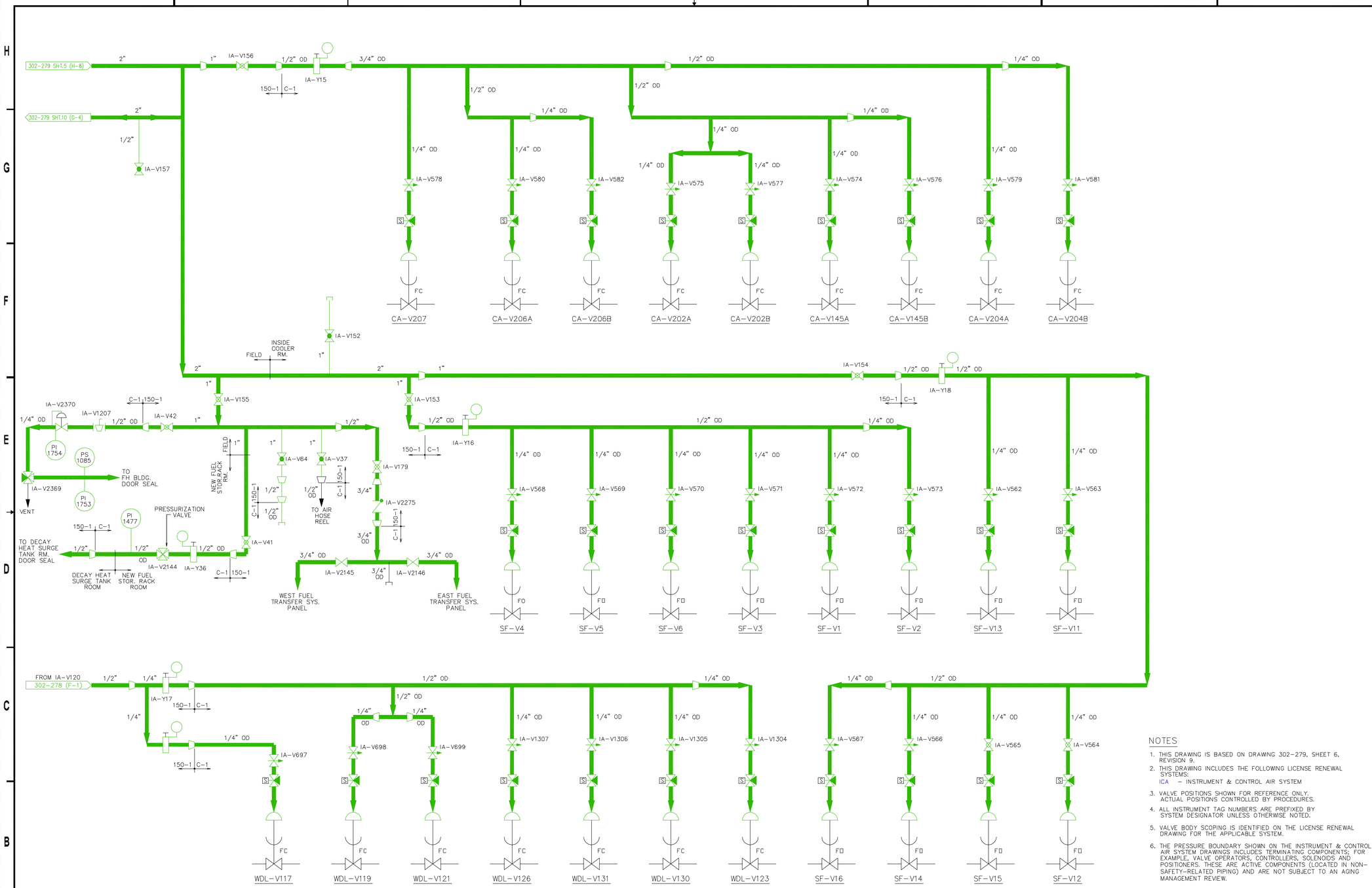

NOTES

1. THIS DRAWING IS BASED ON DRAWING 302-279, SHEET 6, REVISION 9.
2. THIS DRAWING INCLUDES THE FOLLOWING LICENSE RENEWAL SYSTEMS:
   ICA – INSTRUMENT & CONTROL AIR SYSTEM
3. VALVE POSITIONS SHOWN FOR REFERENCE ONLY. ACTUAL POSITIONS CONTROLLED BY PROCEDURES.
4. ALL INSTRUMENT TAG NUMBERS ARE PREFIXED BY SYSTEM DESIGNATOR UNLESS OTHERWISE NOTED.
5. VALVE BODY SCOPING IS IDENTIFIED ON THE LICENSE RENEWAL DRAWING FOR THE APPLICABLE SYSTEM.
6. THE PRESSURE BOUNDARY SHOWN ON THE INSTRUMENT & CONTROL AIR SYSTEM DRAWINGS INCLUDES TERMINATING COMPONENTS; FOR EXAMPLE, VALVE OPERATORS, CONTROLLERS, SOLENOIDS AND POSITIONERS. THESE ARE ACTIVE COMPONENTS (LOCATED IN NON-SAFETY-RELATED PIPING) AND ARE NOT SUBJECT TO AN AGING MANAGEMENT REVIEW.

TABLE OF ADDITIONS & CHANGES

NO	DATE	DESCRIPTION	REV'D	CHK'D	APP'D
0	01 03 08	INITIAL ISSUE FOR LICENSE RENEWAL	T W	J M C	D P C

MECHANICAL

LICENSE RENEWAL DRAWING
INSTRUMENT AIR
AUX. BUILDING END USERS
FLOW DIAGRAM

THREE MILE ISLAND
AmerGen

SHEET 6 OF 11 | LR-302-279 | 0

DWG.NO. LR-302-279 SH. 6

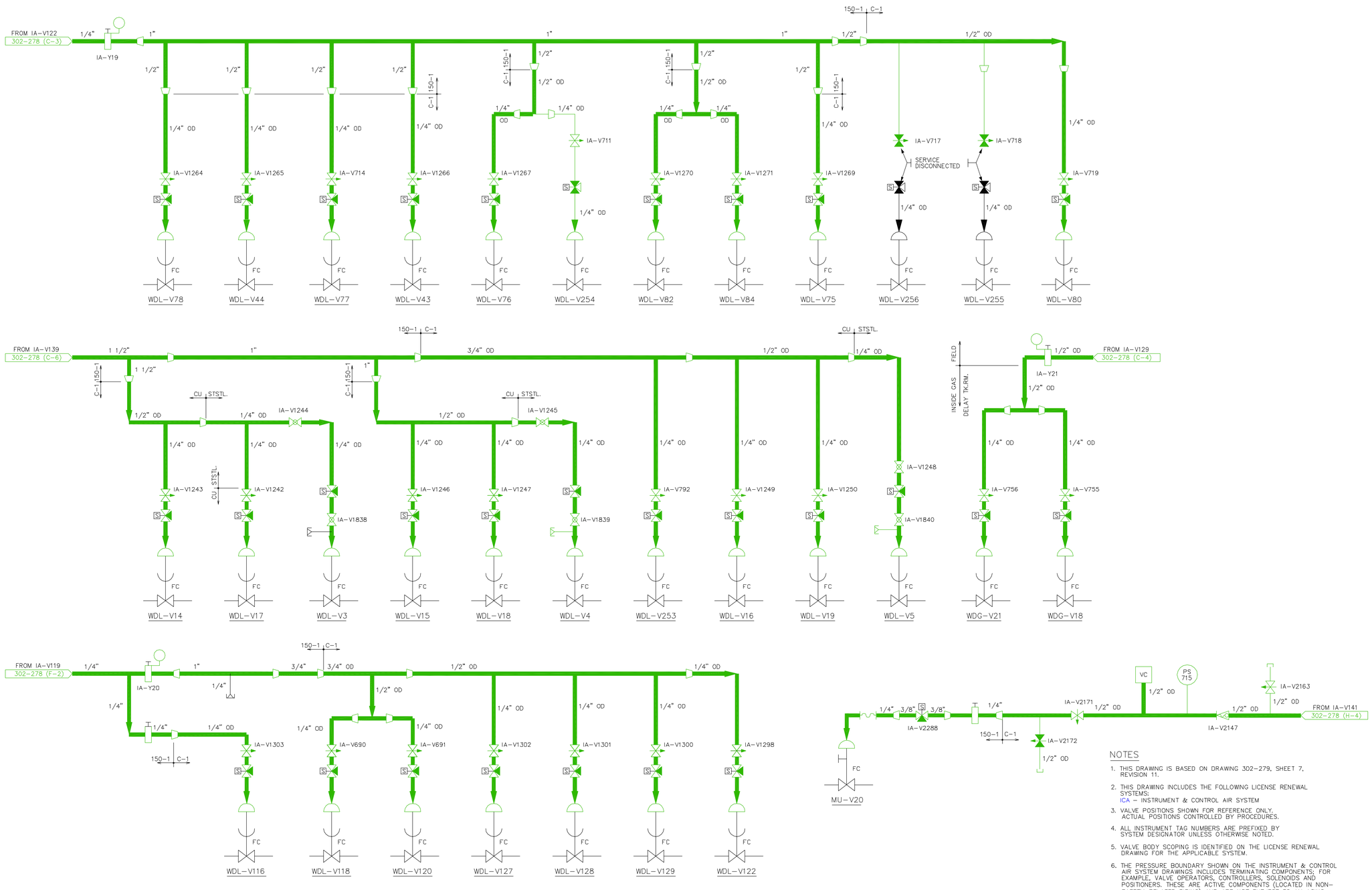

NOTES

1. THIS DRAWING IS BASED ON DRAWING 302-279, SHEET 7, REVISION 11.
2. THIS DRAWING INCLUDES THE FOLLOWING LICENSE RENEWAL SYSTEMS:
   ICA – INSTRUMENT & CONTROL AIR SYSTEM
3. VALVE POSITIONS SHOWN FOR REFERENCE ONLY. ACTUAL POSITIONS CONTROLLED BY PROCEDURES.
4. ALL INSTRUMENT TAG NUMBERS ARE PREFIXED BY SYSTEM DESIGNATOR UNLESS OTHERWISE NOTED.
5. VALVE BODY SCOPING IS IDENTIFIED ON THE LICENSE RENEWAL DRAWING FOR THE APPLICABLE SYSTEM.
6. THE PRESSURE BOUNDARY SHOWN ON THE INSTRUMENT & CONTROL AIR SYSTEM DRAWINGS INCLUDES TERMINATING COMPONENTS; FOR EXAMPLE, VALVE OPERATORS, CONTROLLERS, SOLENOIDS AND POSITIONERS. THESE ARE ACTIVE COMPONENTS (LOCATED IN NON-SAFETY-RELATED PIPING) AND ARE NOT SUBJECT TO AN AGING MANAGEMENT REVIEW.

TABLE OF ADDITIONS & CHANGES

NO	DATE	DESCRIPTION	REV'D	CHK'D	APP'D
0	01 03 08	INITIAL ISSUE FOR LICENSE RENEWAL	T W	J M C	D P C

MECHANICAL

LICENSE RENEWAL DRAWING
INSTRUMENT AIR
AUX. BUILDING END USERS
FLOW DIAGRAM

THREE MILE ISLAND
AmerGen

SHEET 7 OF 11 | LR-302-279 | REV 0

DWG.NO. LR-302-279 SH. 7

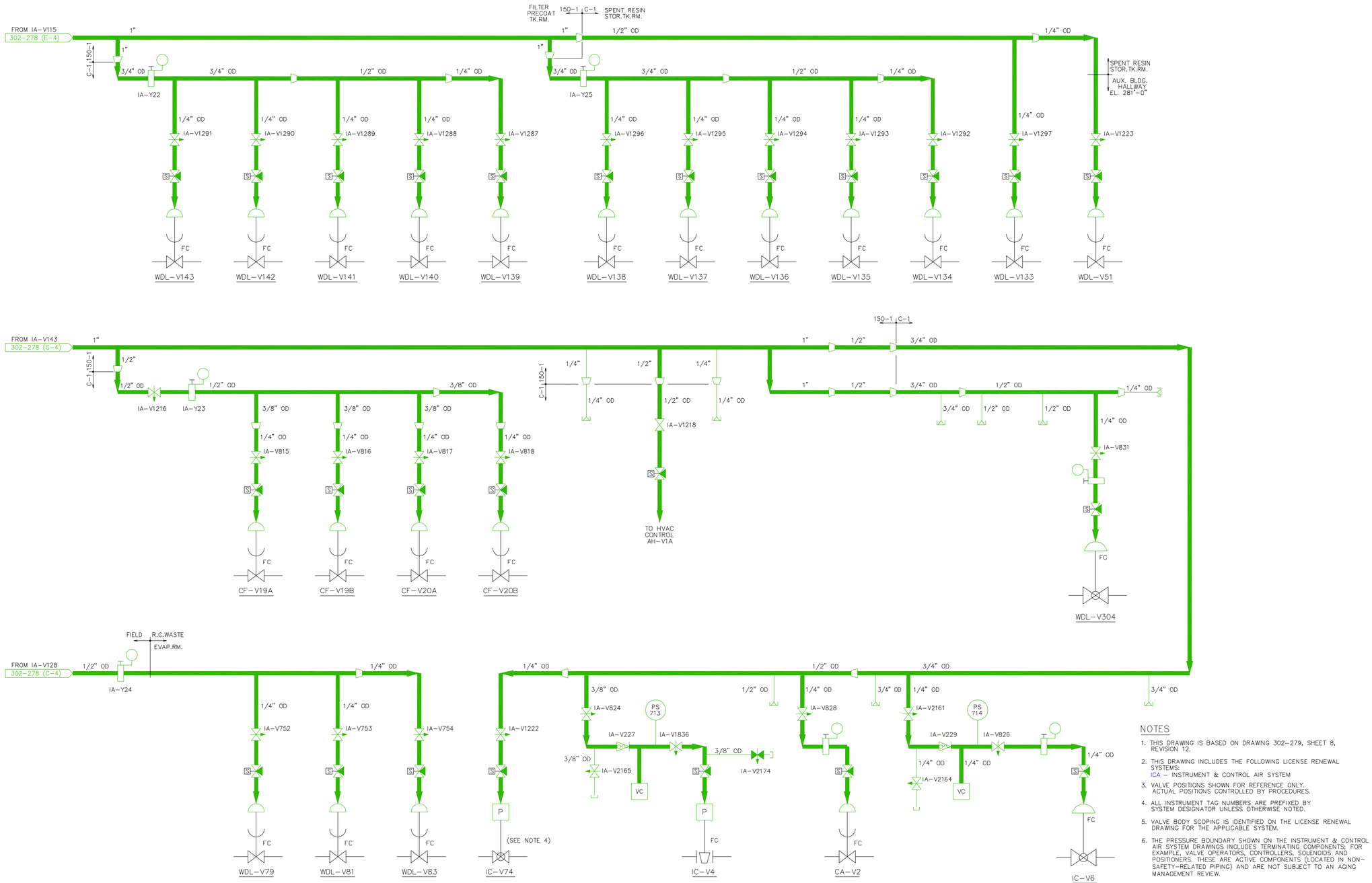

NOTES

1. THIS DRAWING IS BASED ON DRAWING 302-279, SHEET 8, REVISION 12.
2. THIS DRAWING INCLUDES THE FOLLOWING LICENSE RENEWAL SYSTEMS:
   ICA – INSTRUMENT & CONTROL AIR SYSTEM
3. VALVE POSITIONS SHOWN FOR REFERENCE ONLY. ACTUAL POSITIONS CONTROLLED BY PROCEDURES.
4. ALL INSTRUMENT TAG NUMBERS ARE PREFIXED BY SYSTEM DESIGNATOR UNLESS OTHERWISE NOTED.
5. VALVE BODY SCOPING IS IDENTIFIED ON THE LICENSE RENEWAL DRAWING FOR THE APPLICABLE SYSTEM.
6. THE PRESSURE BOUNDARY SHOWN ON THE INSTRUMENT & CONTROL AIR SYSTEM DRAWINGS INCLUDES TERMINATING COMPONENTS; FOR EXAMPLE, VALVE OPERATORS, CONTROLLERS, SOLENOIDS AND POSITIONERS. THESE ARE ACTIVE COMPONENTS (LOCATED IN NON-SAFETY-RELATED PIPING) AND ARE NOT SUBJECT TO AN AGING MANAGEMENT REVIEW.

TABLE OF ADDITIONS & CHANGES

NO	DATE	DESCRIPTION	REV'D	CHK'D	APP'D
0	01 03 08	INITIAL ISSUE FOR LICENSE RENEWAL	T W	J M C	D P C

MECHANICAL

LICENSE RENEWAL DRAWING
INSTRUMENT AIR
AUX. BUILDING END USERS
FLOW DIAGRAM

THREE MILE ISLAND
AmerGen

SHEET 8 OF 11 LR-302-279 REV 0

DWG.NO. LR-302-279 SH. 8

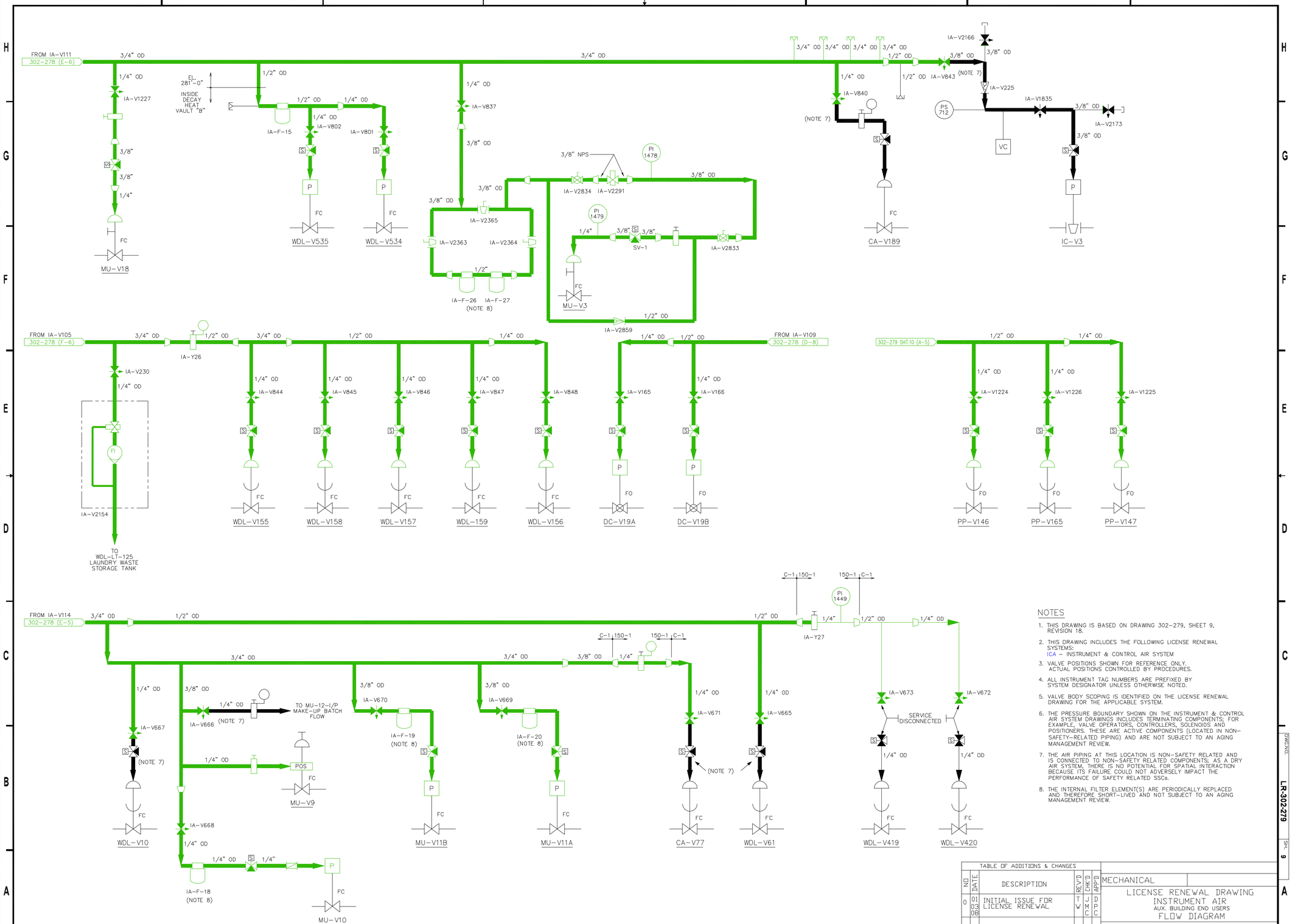

NOTES

1. THIS DRAWING IS BASED ON DRAWING 302-279, SHEET 9, REVISION 18.
2. THIS DRAWING INCLUDES THE FOLLOWING LICENSE RENEWAL SYSTEMS:
   ICA – INSTRUMENT & CONTROL AIR SYSTEM
3. VALVE POSITIONS SHOWN FOR REFERENCE ONLY. ACTUAL POSITIONS CONTROLLED BY PROCEDURES.
4. ALL INSTRUMENT TAG NUMBERS ARE PREFIXED BY SYSTEM DESIGNATOR UNLESS OTHERWISE NOTED.
5. VALVE BODY SCOPING IS IDENTIFIED ON THE LICENSE RENEWAL DRAWING FOR THE APPLICABLE SYSTEM.
6. THE PRESSURE BOUNDARY SHOWN ON THE INSTRUMENT & CONTROL AIR SYSTEM DRAWINGS INCLUDES TERMINATING COMPONENTS; FOR EXAMPLE, VALVE OPERATORS, CONTROLLERS, SOLENOIDS AND POSITIONERS. THESE ARE ACTIVE COMPONENTS (LOCATED IN NON-SAFETY-RELATED PIPING) AND ARE NOT SUBJECT TO AN AGING MANAGEMENT REVIEW.
7. THE AIR PIPING AT THIS LOCATION IS NON-SAFETY RELATED AND IS CONNECTED TO NON-SAFETY RELATED COMPONENTS; AS A DRY AIR SYSTEM, THERE IS NO POTENTIAL FOR SPATIAL INTERACTION BECAUSE ITS FAILURE COULD NOT ADVERSELY IMPACT THE PERFORMANCE OF SAFETY RELATED SSCs.
8. THE INTERNAL FILTER ELEMENT(S) ARE PERIODICALLY REPLACED AND THEREFORE SHORT-LIVED AND NOT SUBJECT TO AN AGING MANAGEMENT REVIEW.

TABLE OF ADDITIONS & CHANGES

NO	DATE	DESCRIPTION	REV'D	CHK'D	APP'D
0	01 03 08	INITIAL ISSUE FOR LICENSE RENEWAL	T W	J M C	D P C

MECHANICAL

LICENSE RENEWAL DRAWING
INSTRUMENT AIR
AUX. BUILDING END USERS
FLOW DIAGRAM

THREE MILE ISLAND
AmerGen

SHEET 9 OF 11 LR-302-279 REV 0

DWG.NO. LR-302-279 SH. 9

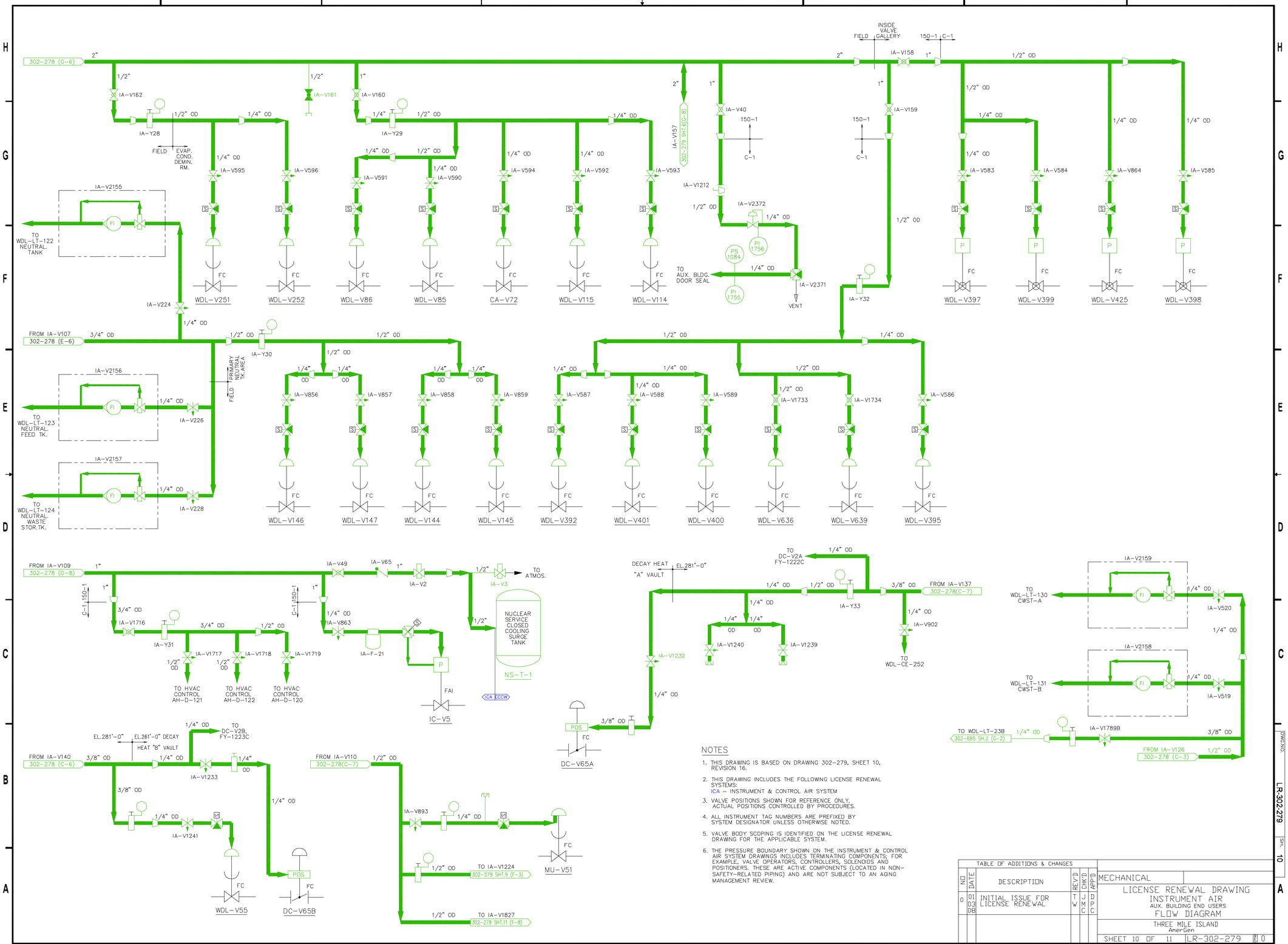

NOTES

1. THIS DRAWING IS BASED ON DRAWING 302-279, SHEET 10, REVISION 16.
2. THIS DRAWING INCLUDES THE FOLLOWING LICENSE RENEWAL SYSTEMS:
   ICA – INSTRUMENT & CONTROL AIR SYSTEM
3. VALVE POSITIONS SHOWN FOR REFERENCE ONLY. ACTUAL POSITIONS CONTROLLED BY PROCEDURES.
4. ALL INSTRUMENT TAG NUMBERS ARE PREFIXED BY SYSTEM DESIGNATOR UNLESS OTHERWISE NOTED.
5. VALVE BODY SCOPING IS IDENTIFIED ON THE LICENSE RENEWAL DRAWING FOR THE APPLICABLE SYSTEM.
6. THE PRESSURE BOUNDARY SHOWN ON THE INSTRUMENT & CONTROL AIR SYSTEM DRAWINGS INCLUDES TERMINATING COMPONENTS; FOR EXAMPLE, VALVE OPERATORS, CONTROLLERS, SOLENOIDS AND POSITIONERS. THESE ARE ACTIVE COMPONENTS (LOCATED IN NON-SAFETY-RELATED PIPING) AND ARE NOT SUBJECT TO AN AGING MANAGEMENT REVIEW.

TABLE OF ADDITIONS & CHANGES

NO	DATE	DESCRIPTION	REV'D	CHK'D	APP'D
0	01 03 08	INITIAL ISSUE FOR LICENSE RENEWAL	T W	J M C	D P C

MECHANICAL

LICENSE RENEWAL DRAWING
INSTRUMENT AIR
AUX. BUILDING END USERS
FLOW DIAGRAM

THREE MILE ISLAND
AmerGen

SHEET 10 OF 11 | LR-302-279 | 0

DWG.NO. LR-302-279 SH. 10

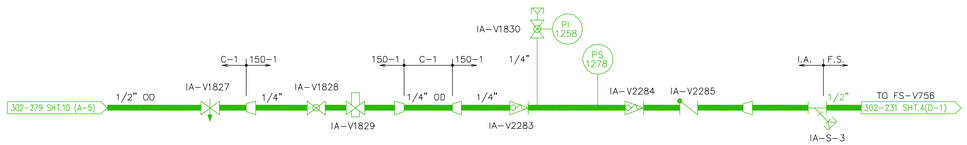

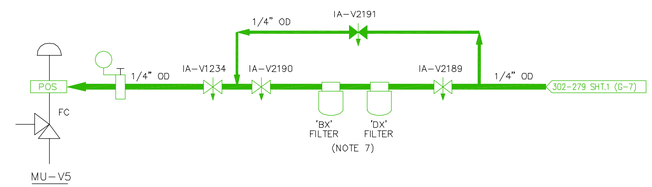

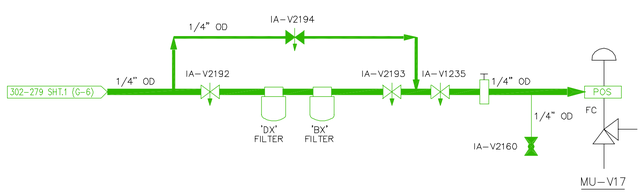

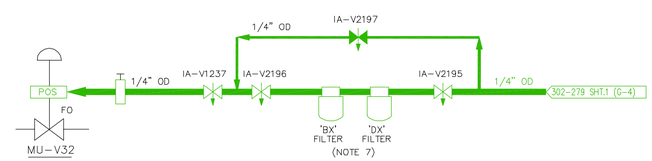

NOTES

1. THIS DRAWING IS BASED ON DRAWING 302-279, SHEET 11, REVISION 6.
2. THIS DRAWING INCLUDES THE FOLLOWING LICENSE RENEWAL SYSTEMS:
   ICA – INSTRUMENT & CONTROL AIR SYSTEM
3. VALVE POSITIONS SHOWN FOR REFERENCE ONLY. ACTUAL POSITIONS CONTROLLED BY PROCEDURES.
4. ALL INSTRUMENT TAG NUMBERS ARE PREFIXED BY SYSTEM DESIGNATOR UNLESS OTHERWISE NOTED.
5. VALVE BODY SCOPING IS IDENTIFIED ON THE LICENSE RENEWAL DRAWING FOR THE APPLICABLE SYSTEM.
6. THE PRESSURE BOUNDARY SHOWN ON THE INSTRUMENT & CONTROL AIR SYSTEM DRAWINGS INCLUDES TERMINATING COMPONENTS; FOR EXAMPLE, VALVE OPERATORS, CONTROLLERS, SOLENOIDS AND POSITIONERS. THESE ARE ACTIVE COMPONENTS (LOCATED IN NON-SAFETY-RELATED PIPING) AND ARE NOT SUBJECT TO AN AGING MANAGEMENT REVIEW.
7. THE INTERNAL FILTER ELEMENT(S) ARE PERIODICALLY REPLACED AND THEREFORE SHORT-LIVED AND NOT SUBJECT TO AN AGING MANAGEMENT REVIEW.

TABLE OF ADDITIONS & CHANGES

NO.	DATE	DESCRIPTION	REV'D	CHK'D	APP'D
0	01 03 08	INITIAL ISSUE FOR LICENSE RENEWAL	T W	J M C	D P C

MECHANICAL

LICENSE RENEWAL DRAWING
INSTRUMENT AIR
AUX. BUILDING END USERS
FLOW DIAGRAM

THREE MILE ISLAND
AmerGen

SHEET 11 OF 11 LR-302-279 REV 0

DWG.NO. LR-302-279 SH. 11