LICENSE RENEWAL APPLICATION

Three Mile Island Nuclear Station Unit 1

Facility Operating License No. DPR-50

TABLE OF CONTENTS

SECTION 1 Administrative Information

1.0 ADMINISTRATIVE INFORMATION 1-1

1.1 GENERAL INFORMATION – 10 CFR 54.19 1-1
1.1.1 Name of Applicant 1-1
1.1.2 Address of Applicant 1-1
1.1.3 Descriptions of Business or Occupation of Applicant 1-1
1.1.4 Descriptions of Organization and Management of Applicant 1-1
1.1.5 Class of License, Use of the Facility, and Period of Time for Which the License Is Sought 1-3
1.1.6 Earliest and Latest Dates for Alterations, If Proposed 1-3
1.1.7 Restricted Data 1-3
1.1.8 Regulatory Agencies 1-3
1.1.9 Local News Publications 1-4
1.1.10 Conforming Changes To Standard Indemnity Agreement 1-4

1.2 GENERAL LICENSE INFORMATION 1-6
1.2.1 Application Updates, Renewed Licenses, and Renewal Term Operation 1-6
1.2.2 Contact Information 1-6

1.3 PURPOSE 1-7

1.4 DESCRIPTION OF THE PLANT 1-7

1.5 APPLICATION STRUCTURE 1-8

1.6 ACRONYMS 1-11

1.7 GENERAL REFERENCES 1-15

SECTION 2

SCOPING AND SCREENING METHODOLOGY FOR IDENTIFYING STRUCTURES AND COMPONENTS SUBJECT TO AGING MANAGEMENT REVIEW, AND IMPLEMENTATION RESULTS

2.0 SCOPING AND SCREENING METHODOLOGY FOR IDENTIFYING STRUCTURES AND COMPONENTS SUBJECT TO AGING MANAGEMENT REVIEW, AND IMPLEMENTATION RESULTS 2.0-1

2.1 SCOPING AND SCREENING METHODOLOGY 2.1-1

2.1.1 Introduction 2.1-1
2.1.2 Information Sources Used for Scoping and Screening 2.1-4
2.1.3 Technical Basis Documents 2.1-5
2.1.4 Interim Staff Guidance Discussion 2.1-14
2.1.5 Scoping Procedure 2.1-15
2.1.6 Screening Procedure 2.1-23
2.1.7 Generic Safety Issues 2.1-31
2.1.8 Conclusion 2.1-32

2.2 PLANT LEVEL SCOPING RESULTS 2.2-1

2.3 SCOPING AND SCREENING RESULTS: MECHANICAL 2.3-1

2.3.1 Reactor Vessel, Internals, and Reactor Coolant System 2.3-1

2.3.1.1 Reactor Coolant System 2.3-2
2.3.1.2 Reactor Vessel 2.3-9
2.3.1.3 Reactor Vessel Internals 2.3-13
2.3.1.4 Steam Generator 2.3-19

2.3.2 Engineered Safety Features Systems 2.3-23

2.3.2.1 Core Flooding System 2.3-24
2.3.2.2 Decay Heat Removal System 2.3-29
2.3.2.3 Makeup and Purification System (High Pressure Injection) 2.3-36
2.3.2.4 Primary Containment Heating and Ventilation System 2.3-44
2.3.2.5 Reactor Building Spray System 2.3-49
2.3.2.6 Reactor Building Sump and Drain System 2.3-54

2.3.3 Auxiliary Systems 2.3-58

2.3.3.1 Auxiliary and Fuel Handling Building Ventilation System 2.3-59
2.3.3.2 Auxiliary Steam System 2.3-63
2.3.3.3 Circulating Water System 2.3-68
2.3.3.4 Closed Cycle Cooling Water System 2.3-73
2.3.3.5 Containment Isolation System 2.3-81
2.3.3.6 Control Building Ventilation System 2.3-84

2.3.3.7 Cranes and Hoists 2.3-89
2.3.3.8 Diesel Generator Building Ventilation System 2.3-92
2.3.3.9 Emergency Diesel Generators and Auxiliary Systems 2.3-95
2.3.3.10 Fire Protection System 2.3-100
2.3.3.11 Fuel Handling and Fuel Storage System 2.3-108
2.3.3.12 Fuel Oil System 2.3-112
2.3.3.13 Hydrogen Monitoring 2.3-115
2.3.3.14 Instrument and Control Air System 2.3-118
2.3.3.15 Intake Screen and Pump House Ventilation System 2.3-123
2.3.3.16 Intermediate Building Ventilation System 2.3-126
2.3.3.17 Liquid and Gas Sampling System 2.3-129
2.3.3.18 Miscellaneous Floor and Equipment Drains System 2.3-133
2.3.3.19 Open Cycle Cooling Water System 2.3-138
2.3.3.20 Radiation Monitoring System 2.3-143
2.3.3.21 Radwaste System 2.3-148
2.3.3.22 Service Building Chilled Water System 2.3-155
2.3.3.23 Spent Fuel Cooling System 2.3-158
2.3.3.24 Station Blackout and UPS Diesel Generator System 2.3-162
2.3.3.25 Water Treatment & Distribution System 2.3-167

2.3.4 Steam and Power Conversion Systems 2.3-173

2.3.4.1 Condensate System 2.3-174
2.3.4.2 Condensers & Air Removal System 2.3-180
2.3.4.3 Emergency Feedwater System 2.3-186
2.3.4.4 Extraction Steam System 2.3-192
2.3.4.5 Feedwater System 2.3-195
2.3.4.6 Main Generator and Auxiliary Systems 2.3-201
2.3.4.7 Main Steam System 2.3-206
2.3.4.8 Steam Turbine and Auxiliary Systems 2.3-212

2.4 SCOPING AND SCREENING RESULTS: STRUCTURES 2.4-1

2.4.1 Air Intake Structure 2.4-2
2.4.2 Auxiliary Building 2.4-5
2.4.3 Circulating Water Pump House 2.4-11
2.4.4 Control Building 2.4-14
2.4.5 Diesel Generator Building 2.4-19
2.4.6 Dike/Flood Control System 2.4-23
2.4.7 Fuel Handling Building 2.4-26
2.4.8 Intake Screen and Pump House 2.4-31
2.4.9 Intermediate Building 2.4-35
2.4.10 Mechanical Draft Cooling Tower Structures 2.4-40
2.4.11 Miscellaneous Yard Structures 2.4-44
2.4.12 Natural Draft Cooling Tower 2.4-50
2.4.13 Structural Commodities 2.4-53
2.4.14 Reactor Building 2.4-57
2.4.15 SBO Diesel Generator Building 2.4-63
2.4.16 Service Building 2.4-66
2.4.17 Component Supports Commodity Group 2.4-69

2.4.18 Substation Structures 2.4-72
2.4.19 Turbine Building 2.4-75
2.4.20 UPS Diesel Building 2.4-79

2.5 SCOPING AND SCREENING RESULTS: ELECTRICAL SYSTEMS/COMMODITY GROUPS 2.5-1

2.5.1 Electrical Systems 2.5-1

2.5.1.1 120 V Vital Power System 2.5-2
2.5.1.2 250/125 VDC System 2.5-4
2.5.1.3 4160 V Auxiliary System 2.5-6
2.5.1.4 480 V Auxiliary System 2.5-8
2.5.1.5 6900 V Auxiliary System 2.5-10
2.5.1.6 Communication System 2.5-12
2.5.1.7 Digital Turbine Control System 2.5-14
2.5.1.8 Electrical Heat Tracing System 2.5-16
2.5.1.9 Engineered Safeguards Actuation System (ESAS) 2.5-18
2.5.1.10 Heat Sink Protection System 2.5-20
2.5.1.11 Integrated Control System 2.5-22
2.5.1.12 Lighting System 2.5-24
2.5.1.13 Main and Auxiliary Transformers 2.5-26
2.5.1.14 Non-Nuclear Instrumentation and Monitoring System 2.5-28
2.5.1.15 Nuclear Instrumentation and Incore Monitoring System 2.5-31
2.5.1.16 Reactor Protection and Control Rod Drive System 2.5-33
2.5.1.17 Remote Shutdown Panel 2.5-35
2.5.1.18 Substation 2.5-37

2.5.2 Electrical Commodity Groups 2.5-39

2.5.2.1 Identification of Electrical Commodity Groups 2.5-39
2.5.2.2 Application of Screening Criterion 10 CFR 54.21(a)(1)(i) to the Electrical Commodity Groups 2.5-39
2.5.2.3 Elimination of Commodity Groups With No License Renewal Intended Functions 2.5-39
2.5.2.4 Application of Screening Criterion 10 CFR 54.21(a)(1)(ii) to Electrical Commodity Groups 2.5-39
2.5.2.5 Determination of Electrical Commodity Groups Subject to Aging Management Review 2.5-40
2.5.2.5.1 Insulated Cables and Connections 2.5-40
2.5.2.5.2 Metal Enclosed Bus 2.5-41
2.5.2.5.3 Fuse Holders 2.5-41
2.5.2.5.4 Cable Connections (Metallic Parts) 2.5-41
2.5.2.5.5 Connector Contacts for Electrical Connectors Exposed to Borated Water Leakage 2.5-41
2.5.2.5.6 Electrical Penetrations 2.5-41
2.5.2.5.7 High Voltage Insulators 2.5-42
2.5.2.5.8 Transmission Conductors and Connections, Switchyard Bus and Connections 2.5-42

SECTION 3

AGING MANAGEMENT REVIEW RESULTS

3.0 AGING MANAGEMENT REVIEW RESULTS 3.0-1

3.1 AGING MANAGEMENT OF REACTOR VESSEL, INTERNALS AND REACTOR COOLANT SYSTEMS 3.1-1

3.1.1 Introduction 3.1-1
3.1.2 Results 3.1-1

3.1.2.1 Materials, Environments, Aging Effects Requiring Management and Aging Management Programs 3.1-1

3.1.2.2 AMR Results for Which Further Evaluation is Recommended by the GALL Report 3.1-7

3.1.2.3 Time-Limited Aging Analysis 3.1-15

3.1.3 Conclusion 3.1-15

3.2 AGING MANAGEMENT OF ENGINEERED SAFETY FEATURES 3.2-1

3.2.1 Introduction 3.2-1
3.2.2 Results 3.2-1

3.2.2.1 Materials, Environments, Aging Effects Requiring Management and Aging Management Programs 3.2-1

3.2.2.2 AMR Results for Which Further Evaluation is Recommended by the GALL Report 3.2-9

3.2.2.3 Time-Limited Aging Analysis 3.2-15

3.2.3 Conclusion 3.2-15

3.3 AGING MANAGEMENT OF AUXILIARY SYSTEMS 3.3-1

3.3.1 Introduction 3.3-1
3.3.2 Results 3.3-1

3.3.2.1 Materials, Environments, Aging Effects Requiring Management and Aging Management Programs 3.3-3

3.3.2.2 AMR Results for Which Further Evaluation is Recommended by the GALL Report 3.3-32

3.3.2.3 Time-Limited Aging Analysis 3.3-48

3.3.3 Conclusion 3.3-48

3.4 AGING MANAGEMENT OF STEAM AND POWER CONVERSION SYSTEM 3.4-1

3.4.1 Introduction 3.4-1
3.4.2 Results 3.4-1

3.4.2.1 Materials, Environments, Aging Effects Requiring Management and Aging Management Programs 3.4-2

3.4.2.2 AMR Results for Which Further Evaluation is Recommended by the GALL Report 3.4-13

3.4.2.3 Time-Limited Aging Analysis 3.4-21

3.4.3 Conclusion 3.4-21

3.5 AGING MANAGEMENT OF CONTAINMENTS, STRUCTURES, COMPONENT SUPPORTS 3.5-1

3.5.1 Introduction 3.5-1
3.5.2 Results 3.5-1

3.5.2.1 Materials, Environments, Aging Effects Requiring Management and Aging Management Programs 3.5-2

3.5.2.2 AMR Results for Which Further Evaluation is Recommended by the GALL Report 3.5-26

3.5.2.3.1 Time-Limited Aging Analysis 3.5-42

3.5.3 Conclusion 3.5-42

3.6 AGING MANAGEMENT OF ELECTRICAL COMMODITY GROUPS 3.6-1

3.6.1 Introduction 3.6-1
3.6.2 Results 3.6-1

3.6.2.1 Materials, Environments, Aging Effects Requiring Management and Aging Management Programs for the Electrical Commodity Groups 3.6-1

3.6.2.2 AMR Results for Which Further Evaluation is Recommended by the GALL Report 3.6-6

3.6.2.3 AMR Results Not Consistent With NUREG-1801 ..... 3.6-10

3.6.3 Conclusion 3.6-12

SECTION 4

TIME-LIMITED AGING ANALYSES

4.0 TIME-LIMITED AGING ANALYSES 4-1

4.1 INTRODUCTION 4-1

4.1.1 Identification of TLAAs 4-1
4.1.2 Identification of Exemptions 4-3
4.1.3 Summary of Results 4-4

4.2 NEUTRON EMBRITTLEMENT OF THE REACTOR VESSEL AND INTERNALS 4-7

4.2.1 Neutron Fluence Analysis 4-8
4.2.2 Charpy Upper-Shelf Energy For Beltline Plates And Forgings 4-10
4.2.3 Charpy Upper-Shelf Energy For Beltline Welds (Equivalent Margins Analysis) 4-13
4.2.4 Pressurized Thermal Shock Limits (RT_{PTS}) For Reactor Vessel Materials Due To Neutron Embrittlement 4-17
4.2.5 Reactor Vessel Operating Pressure – Temperature Limits, Including Adjusted Reference Temperatures and Low Temperature Overpressurization Limits 4-20
4.2.6 Neutron Embrittlement of Reactor Vessel Internals 4-21

4.3 METAL FATIGUE OF PIPING AND COMPONENTS 4-22

4.3.1 ASME Class 1 and USAS B31.7 Piping and Component Fatigue Analyses 4-23
4.3.2 Evaluation or Reactor Water Environmental Effects on Fatigue Life of Components and Piping (Generic Safety Issue 190) 4-27
4.3.3 ASME Class 2 and Class 3 and USAS B31.1 Piping and Component Fatigue Analyses 4-39
4.3.4 Reactor Vessel Internals Fatigue Analyses 4-40
4.3.5 Reactor Vessel Internals Flow-Induced Vibration Analysis 4-41
4.3.6 Underclad Cracking Evaluation for Reactor Vessel 4-42
4.3.7 Reactor Coolant Pump Motor Flywheel Fatigue Crack Growth Analysis 4-44

4.4 LEAK-BEFORE-BREAK ANALYSIS OF PRIMARY SYSTEM PIPING. 4-44

4.4.1 Fatigue Flaw Growth Analysis 4-45
4.4.2 Thermal Aging Embrittlement of Cast Austenitic Stainless

Steel (CASS) Reactor Coolant Pump Casings 4-45

4.5 FUEL TRANSFER TUBE BELLOWS DESIGN CYCLES 4-47

4.6 CRANE LOAD CYCLE LIMITS 4-48

4.6.1 Reactor Building Crane 4-48
4.6.2 Fuel Handling Building Crane 4-49

4.7 LOSS OF PRESTRESS IN CONCRETE CONTAINMENT TENDONS 4-49

4.8 ENVIRONMENTAL QUALIFICATION (EQ) OF ELECTRICAL EQUIPMENT 4-51

4.9 REFERENCES..... 4-55

List of Appendices

APPENDIX A – UFSAR SUPPLEMENT

APPENDIX B – AGING MANAGEMENT PROGRAMS

APPENDIX C – COMMODITY GROUPS (NOT USED)

APPENDIX D – TECHNICAL SPECIFICATION CHANGES

APPENDIX E – ENVIRONMENTAL REPORT FOR TMI NUCLEAR STATION UNIT 1

List of Tables

Table 2.1-1 Passive Intended Function Definitions 2.1-28

Table 2.2-1 Plant Level Scoping Results 2.2-2

Table 2.3.1-1 Components Subject to Aging Management Review – Reactor Coolant System 2.3-7
Table 2.3.1-2 Components Subject to Aging Management Review - Reactor Vessel 2.3-12
Table 2.3.1-3 Components Subject to Aging Management Review - Reactor Vessel Internals 2.3-16
Table 2.3.1-4 Components Subject to Aging Management Review - Steam Generator ... 2.3-22

Table 2.3.2-1 Components Subject to Aging Management Review - Core Flooding System 2.3-28
Table 2.3.2-2 Components Subject to Aging Management Review - Decay Heat Removal System 2.3-35
Table 2.3.2-3 Components Subject to Aging Management Review - Makeup and Purification System (High Pressure Injection) 2.3-42
Table 2.3.2-4 Components Subject to Aging Management Review - Primary Containment Heating and Ventilation System 2.3-48
Table 2.3.2-5 Components Subject to Aging Management Review - Reactor Building Spray System 2.3-53
Table 2.3.2-6 Components Subject to Aging Management Review - Reactor Building Sump and Drain System 2.3-57

Table 2.3.3-1 Components Subject to Aging Management Review – Auxiliary and Fuel Handling Building Ventilation System 2.3-62
Table 2.3.3-2 Components Subject to Aging Management Review - Auxiliary Steam System 2.3-67
Table 2.3.3-3 Components Subject to Aging Management Review - Circulating Water System 2.3-72
Table 2.3.3-4 Components Subject to Aging Management Review - Closed Cycle Cooling Water System 2.3-78
Table 2.3.3-5 Components Subject to Aging Management Review - Containment Isolation System 2.3-83
Table 2.3.3-6 Components Subject to Aging Management Review - Control Building Ventilation System 2.3-88
Table 2.3.3-7 Components Subject to Aging Management Review – Cranes and Hoists. 2.3-91
Table 2.3.3-8 Components Subject to Aging Management Review – Diesel Generator Building Ventilation System 2.3-94
Table 2.3.3-9 Components Subject to Aging Management Review – Emergency Diesel Generators and Auxiliary Systems 2.3-98
Table 2.3.3-10 Components Subject to Aging Management Review – Fire Protection System 2.3-106
Table 2.3.3-11 Components Subject to Aging Management Review – Fuel Handling and Fuel Storage System 2.3-111
Table 2.3.3-12 Components Subject to Aging Management Review – Fuel Oil System 2.3-114
Table 2.3.3-13 Components Subject to Aging Management Review - Hydrogen Monitoring 2.3-117

Table 2.3.3-14 Components Subject to Aging Management Review – Instrument and Control Air System 2.3-122
Table 2.3.3-15 Components Subject to Aging Management Review - Intake Screen and Pump House Ventilation System 2.3-125
Table 2.3.3-16 Components Subject to Aging Management Review – Intermediate Building Ventilation System 2.3-128
Table 2.3.3-17 Components Subject to Aging Management Review – Liquid and Gas Sampling System 2.3-132
Table 2.3.3-18 Components Subject to Aging Management Review – Miscellaneous Floor and Equipment Drains System 2.3-137
Table 2.3.3-19 Components Subject to Aging Management Review - Open Cycle Cooling Water System 2.3-142
Table 2.3.3-20 Components Subject to Aging Management Review – Radiation Monitoring System 2.3-147
Table 2.3.3-21 Components Subject to Aging Management Review – Radwaste System 2.3-153
Table 2.3.3-22 Components Subject to Aging Management Review – Service Building Chilled Water System 2.3-157
Table 2.3.3-23 Components Subject to Aging Management Review – Spent Fuel Cooling System 2.3-161
Table 2.3.3-24 Components Subject to Aging Management Review – Station Blackout and UPS Diesel Generator System 2.3-165
Table 2.3.3-25 Components Subject to Aging Management Review – Water Treatment & Distribution System 2.3-171

Table 2.3.4-1 Components Subject to Aging Management Review - Condensate System 2.3-178
Table 2.3.4-2 Components Subject to Aging Management Review - Condensers & Air Removal System 2.3-184
Table 2.3.4-3 Components Subject to Aging Management Review - Emergency Feedwater System 2.3-191
Table 2.3.4-4 Components Subject to Aging Management Review - Extraction Steam System 2.3-194
Table 2.3.4-5 Components Subject to Aging Management Review - Feedwater System 2.3-200
Table 2.3.4-6 Components Subject to Aging Management Review - Main Generator and Auxiliary Systems 2.3-205
Table 2.3.4-7 Components Subject to Aging Management Review - Main Steam System 2.3-211
Table 2.3.4-8 Components Subject to Aging Management Review - Steam Turbine and Auxiliary Systems 2.3-217

Table 2.4-1 Components Subject to Aging Management Review – Air Intake Structure 2.4-4
Table 2.4-2 Components Subject to Aging Management Review – Auxiliary Building ... 2.4-9
Table 2.4-3 Components Subject to Aging Management Review – Circulating Water Pump House 2.4-13
Table 2.4-4 Components Subject to Aging Management Review - Control Building 2.4-17
Table 2.4-5 Components Subject to Aging Management Review - Diesel Generator Building 2.4-22
Table 2.4-6 Components Subject to Aging Management Review - Dike/Flood Control System 2.4-25

Table 2.4-7 Components Subject to Aging Management Review - Fuel Handling Building 2.4-29
Table 2.4-8 Components Subject to Aging Management Review - Intake Screen and Pump House 2.4-34
Table 2.4-9 Components Subject to Aging Management Review - Intermediate Building 2.4-38
Table 2.4-10 Components Subject to Aging Management Review - Mechanical Draft Cooling Tower Structures 2.4-43
Table 2.4-11 Components Subject to Aging Management Review - Miscellaneous Yard Structures 2.4-49
Table 2.4-12 Components Subject to Aging Management Review - Natural Draft Cooling Tower 2.4-52
Table 2.4-13 Components Subject to Aging Management Review - Component Supports Commodity Group 2.4-56
Table 2.4-14 Components Subject to Aging Management Review - Reactor Building 2.4-61
Table 2.4-15 Components Subject to Aging Management Review - SBO Diesel Generator Building 2.4-65
Table 2.4-16 Components Subject to Aging Management Review - Service Building 2.4-68
Table 2.4-17 Components Subject to Aging Management Review - Structural Commodities 2.4-71
Table 2.4-18 Components Subject to Aging Management Review – Substation Structures 2.4-74
Table 2.4-19 Components Subject to Aging Management Review – Turbine Building 2.4-78
Table 2.4-20 Components Subject to Aging Management Review – UPS Diesel Building 2.4-81

Table 2.5-1 Components Subject to Aging Management Review – Electrical Commodities 2.5-43

Table 3.0-1 TMI-1 Internal Service Environments 3.0-5
Table 3.0-2 TMI-1 External Service Environments 3.0-8

Table 3.1.1 Summary of Aging Management Evaluations for the Reactor Vessel, Internals, and Reactor Coolant System 3.1-16

Table 3.1.2-1 Reactor Coolant System Summary of Aging Management Evaluation 3.1-43
Table 3.1.2-2 Reactor Vessel Summary of Aging Management Evaluation 3.1-73
Table 3.1.2-3 Reactor Vessel Internals Summary of Aging Management Evaluation 3.1-86
Table 3.1.2-4 Steam Generator Summary of Aging Management Evaluation 3.1-128

Table 3.2.1 Summary of Aging Management Evaluations for the Engineered Safety Features 3.2-17

Table 3.2.2-1 Core Flooding System Summary of Aging Management Evaluation 3.2-36
Table 3.2.2-2 Decay Heat Removal System Summary of Aging Management Evaluation 3.2-42
Table 3.2.2-3 Makeup and Purification System (High Pressure Injection) Summary of Aging Management Evaluation 3.2-51

Table 3.2.2-4 Primary Containment Heating and Ventilation System Summary of Aging Management Evaluation 3.2-67
Table 3.2.2-5 Reactor Building Spray System Summary of Aging Management Evaluation 3.2-77
Table 3.2.2-6 Reactor Building Sump and Drain System Summary of Aging Management Evaluation 3.2-84

Table 3.3.1 Summary of Aging Management Evaluations for the Auxiliary Systems 3.3-49

Table 3.3.2-1 Auxiliary and Fuel Handling Building Ventilation System Summary of Aging Management Evaluation 3.3-104
Table 3.3.2-2 Auxiliary Steam System Summary of Aging Management Evaluation 3.3-110
Table 3.3.2-3 Circulating Water System Summary of Aging Management Evaluation 3.3-122
Table 3.3.2-4 Closed Cycle Cooling Water System Summary of Aging Management Evaluation 3.3-133
Table 3.3.2-5 Containment Isolation System Summary of Aging Management Evaluation 3.3-162
Table 3.3.2-6 Control Building Ventilation System Summary of Aging Management Evaluation 3.3-167
Table 3.3.2-7 Cranes and Hoists Summary of Aging Management Evaluation 3.3-174
Table 3.3.2-8 Diesel Generator Building Ventilation System Summary of Aging Management Evaluation 3.3-179
Table 3.3.2-9 Emergency Diesel Generators and Auxiliary Systems Summary of Aging Management Evaluation 3.3-182
Table 3.3.2-10 Fire Protection System Summary of Aging Management Evaluation . 3.3-203
Table 3.3.2-11 Fuel Handling and Fuel Storage System Summary of Aging Management Evaluation 3.3-233
Table 3.3.2-12 Fuel Oil System Summary of Aging Management Evaluation 3.3-238
Table 3.3.2-13 Hydrogen Monitoring Summary of Aging Management Evaluation 3.3-244
Table 3.3.2-14 Instrument and Control Air System Summary of Aging Management Evaluation 3.3-246
Table 3.3.2-15 Intake Screen and Pump House Ventilation System Summary of Aging Management Evaluation 3.3-256
Table 3.3.2-16 Intermediate Building Ventilation System Summary of Aging Management Evaluation 3.3-259
Table 3.3.2-17 Liquid and Gas Sampling System Summary of Aging Management Evaluation 3.3-262
Table 3.3.2-18 Miscellaneous Floor and Equipment Drains System Summary of Aging Management Evaluation 3.3-268
Table 3.3.2-19 Open Cycle Cooling Water System Summary of Aging Management Evaluation 3.3-283
Table 3.3.2-20 Radiation Monitoring System Summary of Aging Management Evaluation 3.3-296
Table 3.3.2-21 Radwaste System Summary of Aging Management Evaluation 3.3-299
Table 3.3.2-22 Service Building Chilled Water System Summary of Aging Management Evaluation 3.3-332
Table 3.3.2-23 Spent Fuel Cooling System Summary of Aging Management Evaluation 3.3-336

Table 3.3.2-24 Station Blackout and UPS Diesel Generator System Summary of Aging Management Evaluation 3.3-339
Table 3.3.2-25 Water Treatment & Distribution System Summary of Aging Management Evaluation 3.3-355

Table 3.4.1 Summary of Aging Management Evaluations for the Steam and Power Conversion System 3.4-23

Table 3.4.2-1 Condensate System Summary of Aging Management Evaluation 3.4-41
Table 3.4.2-2 Condensers & Air Removal System Summary of Aging Management Evaluation 3.4-63
Table 3.4.2-3 Emergency Feedwater System Summary of Aging Management Evaluation 3.4-77
Table 3.4.2-4 Extraction Steam System Summary of Aging Management Evaluation 3.4-88
Table 3.4.2-5 Feedwater System Summary of Aging Management Evaluation 3.4-102
Table 3.4.2-6 Main Generator and Auxiliary Systems Summary of Aging Management Evaluation 3.4-117
Table 3.4.2-7 Main Steam System Summary of Aging Management Evaluation 3.4-127
Table 3.4.2-8 Steam Turbine and Auxiliary Systems Summary of Aging Management Evaluation 3.4-148

Table 3.5.1 Summary of Aging Management Evaluations in Chapters II and III of NUREG-1801 for Structures and Component Supports 3.5-43

Table 3.5.2-1 Air Intake Structure Summary of Aging Management Evaluation 3.5-66
Table 3.5.2-2 Auxiliary Building Summary of Aging Management Evaluation 3.5-74
Table 3.5.2-3 Circulating Water Pump House Summary of Aging Management Evaluation 3.5-90
Table 3.5.2-4 Control Building Summary of Aging Management Evaluation 3.5-100
Table 3.5.2-5 Diesel Generator Building Summary of Aging Management Evaluation 3.5-109
Table 3.5.2-6 Dike/Flood Control System Summary of Aging Management Evaluation 3.5-116
Table 3.5.2-7 Fuel Handling Building Summary of Aging Management Evaluation . 3.5-123
Table 3.5.2-8 Intake Screen and Pump House Summary of Aging Management Evaluation 3.5-138
Table 3.5.2-9 Intermediate Building Summary of Aging Management Evaluation 3.5-152
Table 3.5.2-10 Mechanical Draft Cooling Tower Structures Summary of Aging Management Evaluation 3.5-166
Table 3.5.2-11 Miscellaneous Yard Structures Summary of Aging Management Evaluation 3.5-173
Table 3.5.2-12 Natural Draft Cooling Towers Summary of Aging Management Evaluation 3.5-182
Table 3.5.2-13 Component Support Commodity Group Summary of Aging Management Evaluation 3.5-187
Table 3.5.2-14 Reactor Building Summary of Aging Management Evaluation 3.5-200
Table 3.5.2-15 SBO Diesel Generator Building Summary of Aging Management Evaluation 3.5-244
Table 3.5.2-16 Service Building Summary of Aging Management Evaluation 3.5-250

Table 3.5.2-17 Structural Commodities Summary of Aging Management Evaluation 3.5-256
Table 3.5.2-18 Substation Structures Summary of Aging Management Evaluation ... 3.5-276
Table 3.5.2-19 Turbine Building Summary of Aging Management Evaluation 3.5-282
Table 3.5.2-20 UPS Diesel Building Summary of Aging Management Evaluation 3.5-289

Table 3.6.1 Summary of Aging Management Programs for the Electrical Components Evaluated in Chapter VI of NUREG-1801 ..... 3.6-13

Table 3.6.2-1 Electrical Commodities Summary of Aging Management Evaluation 3.6-17

Table 4.1-1 Time-Limited Aging Analyses Applicable to Three Mile Island Unit 1 4-5
Table 4.1-2 Review of Analyses Listed in NUREG-1800, Tables 4.1-2 and 4.1-3 4-6

Table 4.2.1-1 52 EFPY Wetted Surface Fluence Projections for Beltline Materials 4-9
Table 4.2.2-1 Charpy Upper Shelf Energy for TMI-1 Forgings and Plate Materials at 52 EFPY 4-12
Table 4.2.3-1 Charpy Upper Shelf Energy for TMI-1 Beltline Welds at 52 EFPY 4-14
Table 4.2.3-2 Equivalent Margins Analysis - Fluence and Fracture Toughness Properties for Limiting Welds, 48 and 52 EFPY 4-15
Table 4.2.4-1 Evaluation of TMI-1 Pressurized Thermal Shock for 52 EFPY 4-19
Table 4.3.1-1 Design Codes for TMI-1 Pressure-Retaining Components 4-24
Table 4.3.1-2 TMI-1 Monitored Design Transient Cycles 4-25
Table 4.3.2-1 Initial Environmental Fatigue Analysis Results for NUREG/CR-6260 Locations 4-29
Table 4.3.2-2 TMI-1 Pressurizer Surge Line Environmental Fatigue Results 4-32
Table 4.3.2-3 Reduced Transient Cycle Administrative Limits 4-34
Table 4.3.2-4 Projections for Heatup/Cooldown Cycles for Surge Line Environmental Fatigue Analysis 4-37
Table 4.3.2-5 Final Environmental Fatigue Analysis Summary for NUREG/CR-6260 Locations 4-38

List of Figures

Figure 2.1-1 TMI-1 Scoping and Screening Flowchart 2.1-3

Figure 2.1-2 TMI-1 Offsite Power for SBO 2.1-13

1.0 ADMINISTRATIVE INFORMATION

1.1 GENERAL INFORMATION - 10 CFR 54.19

1.1.1 NAME OF APPLICANT

AmerGen Energy Company, LLC, hereby applies for a renewed operating license for Three Mile Island Nuclear Station Unit 1 (TMI-1).

1.1.2 ADDRESS OF APPLICANT

AmerGen Energy Company, LLC
200 Exelon Way
Kennett Square, PA 19348

1.1.3 DESCRIPTIONS OF BUSINESS OR OCCUPATION OF APPLICANT

AmerGen Energy Company, LLC is a limited liability company formed to own, operate, and acquire nuclear and other electric generating stations; to engage in the sale of electrical energy; and to perform other business activities. AmerGen Energy Company, LLC is a wholly owned subsidiary of Exelon Generation Company, LLC, a Delaware limited liability company which is wholly owned by Exelon Ventures Company, a Delaware limited liability company, which in turn is wholly owned by Exelon Corporation, a corporation formed under the laws of the Commonwealth of Pennsylvania. AmerGen Energy Company, LLC is the licensed operator of Three Mile Island Nuclear Station Unit 1, which is the subject of this application. The current Three Mile Island Nuclear Station Unit 1 operating license (Facility Operating License No. DPR-50) expires at midnight on April 19, 2014. AmerGen Energy Company, LLC will continue as the licensed owner and operator of the plant under the renewed operating license.

1.1.4 DESCRIPTIONS OF ORGANIZATION AND MANAGEMENT OF APPLICANT

AmerGen Energy Company, LLC

AmerGen Energy Company, LLC is organized under the laws of the State of Delaware. AmerGen Energy Company, LLC's principal place of business is in the Commonwealth of Pennsylvania. Exelon Ventures Company is a Delaware limited liability company and Exelon Corporation is a corporation organized under the laws of the Commonwealth of Pennsylvania with their headquarters and principal places of business in Chicago, Illinois. Exelon Corporation is a publicly traded corporation whose shares are widely traded on the New York Stock Exchange. Exelon Ventures Company is a wholly owned subsidiary of Exelon Corporation. AmerGen is a Member managed LLC and the Members assign the day-to-day management of the Company to a committee, known as the AmerGen

Management Committee. (there are no Directors in this management structure). All of the Members, Management Committee Members, and Principal Officers of AmerGen Energy Company, LLC, Exelon Ventures Company, and Exelon Corporation are U.S. citizens. Neither AmerGen Energy Company, LLC nor its parents, Exelon Ventures Company or Exelon Corporation, is owned, controlled, or dominated by an alien, a foreign corporation, or a foreign government. The principal officers of AmerGen Energy Company, LLC, and their addresses, are presented below:

Principal Officers (AmerGen Energy Company, LLC)

Name	Title	Address
Christopher M. Crane	President and CEO	4300 Winfield Road Warrenville, IL 60555
Charles G. Pardee	Chief Nuclear Officer	4300 Winfield Road Warrenville, IL 60555
Michael Pacilio	Chief Operating Officer	4300 Winfield Road Warrenville, IL 60555
Ronald J. DeGregorio	Senior Vice President, Mid-Atlantic Operations	200 Exelon Way Kennett Square, PA 19348
Stephen E Kuczynski	Senior Vice President, Mid-West Operations	4300 Winfield Road Warrenville, IL 60555
Michael Metzner	Senior Vice President and Treasurer	10 South Dearborn Street Chicago, IL 60603
Michael Coyle	Vice President, Mid-Atlantic Operations	200 Exelon Way Kennett Square, PA 19348
Keith R. Jury	Vice President, Licensing and Regulatory Affairs	4300 Winfield Road Warrenville, IL 60555
Carol R. Peterson	Vice President, Finance	4300 Winfield Road Warrenville, IL 60555
James R. Meister	Vice President, Operations Support	4300 Winfield Road Warrenville, IL 60555
Thomas S O'Neill	Vice President, New Plant Development	4300 Winfield Road Warrenville, IL 60555
Bruce G. Wilson	Vice President & Secretary	4300 Winfield Road Warrenville, IL 60555
Kevin D. Stepanuk	Assistant Secretary	2301 Market Street Philadelphia, PA 19101
Bradley J. Fewell	Assistant Secretary	4300 Winfield Road Warrenville, IL 60555
Thomas D.Terry, Jr.	Vice President & General Tax Officer	10 South Dearborn St. Chicago, IL 60603
George R. Shicora	Assistant Treasurer	2301 Market Street Philadelphia, PA 19101
Charles S. Walls	Assistant Treasurer	10 South Dearborn St. Chicago, IL 60603
Amy E Zernich Best	Vice President, Human Resources	4300 Winfield Road Warrenville, IL 60555
Russell G. West	Site Vice President, Three Mile Island	Three Mile Island Rt 441S, Middletown, PA 17057
Bryan C. Hanson	Site Vice President, Clinton	Clinton Power Station Clinton, IL 61727
Timothy S. Rausch	Site Vice President, Oyster Creek	Oyster Creek Nuclear Generating Station, P.O. Box 388, Forked River, NJ 08731

1.1.5 CLASS OF LICENSE, USE OF THE FACILITY, AND PERIOD OF TIME FOR WHICH THE LICENSE IS SOUGHT

AmerGen Energy Company, LLC requests renewal of the Class 104 operating license for Three Mile Island Nuclear Station Unit 1 (License No. DPR-50), for a period of 20 years beyond the expiration of the current license. Approval of this License Renewal request would extend the operating license for TMI-1 from midnight (i.e., 2400 hours) April 19, 2014, until midnight April 19, 2034. TMI-1 would continue to generate electric power during the period of extended operation. AmerGen Energy Company, LLC also requests the renewal of specific licenses under 10 CFR Parts 30, 40, and 70 that are subsumed in the current operating license.

1.1.6 EARLIEST AND LATEST DATES FOR ALTERATIONS, IF PROPOSED

The following plant alterations or modifications have been identified as necessary in connection with this application:

- Installation of new Steam Generators with an earliest installation date of October 2009 and a latest installation date of April 19, 2014.
- Installation of a new River Water Chemical Treatment System to treat the river water systems for biofouling with an earliest installation date of December 2008 and a latest installation date of April 19, 2014.

1.1.7 RESTRICTED DATA

With regard to the requirements of 10 CFR 54.17(f), this application does not contain any “Restricted Data,” as that term is defined in the Atomic Energy Act of 1954, as amended, or other defense information, and it is not expected that any such information will become involved in these licensed activities.

In accordance with the requirements of 10 CFR 54.17(g), the applicant will not permit any individual to have access to, or any facility to possess restricted data or classified national security information until the individual and/or facility has been approved for such access under the provisions of 10 CFR Parts 25 and/or 95.

1.1.8 REGULATORY AGENCIES

AmerGen Energy Company, LLC recovers its share of the costs incurred from operating Three Mile Island Nuclear Station Unit 1 in its own wholesale rates. The rates charged and services provided by AmerGen Energy Company, LLC are subject to regulation by the Federal Energy Regulatory Commission under the Federal Power Act. AmerGen Energy Company, LLC is also subject to regulation as a public utility company by the Securities and Exchange

Commission under the Public Utility Holding Company Act of 1935, as amended.

Securities and Exchange Commission
450 Fifth Street, NW
Washington, DC 20549

Federal Energy Regulatory Commission
888 First St. N.E.
Washington, DC 20426

Pennsylvania Public Utility Commission
PO Box 3265
Harrisburg, PA 17105-3265

1.1.9 LOCAL NEWS PUBLICATIONS

News publications in circulation near TMI-1 that are considered appropriate to give reasonable notice of the application are as follows:

Harrisburg Patriot
News Editor
PO Box 2265
Harrisburg PA 17105

Lancaster Intelligencer Journal
Editor
8 W. King St.
PO Box 1328
Lancaster PA 17608-1328

Middletown Press & Journal
20 S. Union St.
Middletown, PA 17057

York Daily Record
Managing Editor
1750 Industrial Hwy
PO Box 12015
York, PA 17402

1.1.10 CONFORMING CHANGES TO STANDARD INDEMNITY AGREEMENT

10 CFR 54.19(b) requires that “each application must include conforming changes to the standard indemnity agreement, 10 CFR 140.92, Appendix B, to account for the expiration term of the proposed renewed license.” The current indemnity agreement (No. B-64) for TMI-1 states in Article VII that the agreement shall terminate at the time of expiration of that license specified in

Item 3 of the Attachment to the agreement, which is the last to expire; provided that, except as may otherwise be provided in applicable regulations or orders of the Commission, the term of this agreement shall not terminate until all the radioactive material has been removed from the location and transportation of the radioactive material from the location has ended as defined in subparagraph 5(b), Article I. Item 3 of the Attachment to the indemnity agreement includes license number, DPR-50. Applicant requests that any necessary conforming changes be made to Article VII and Item 3 of the Attachment, and any other sections of the indemnity agreement as appropriate to ensure that the indemnity agreement continues to apply during both the terms of the current license and the terms of the renewed license. Applicant understands that no changes may be necessary for this purpose if the current license number is retained.

1.2 GENERAL LICENSE INFORMATION

1.2.1 APPLICATION UPDATES, RENEWED LICENSES, AND RENEWAL TERM OPERATION

In accordance with 10 CFR 54.21(b), during NRC review of this application, an annual update to the application to reflect any change to the current licensing basis that materially affects the contents of the license renewal application will be provided.

In accordance with 10 CFR 54.21(d), AmerGen Energy Company, LLC will maintain a summary list in the Three Mile Island Nuclear Station Unit 1 Updated Final Safety Analysis Report (UFSAR) of activities that are required to manage the effects of aging for the systems, structures or components in the scope of license renewal during the period of extended operation and summaries of the time-limited aging analyses evaluations.

1.2.2 CONTACT INFORMATION

Any notices, questions, or correspondence in connection with this filing should be directed to:

Michael P. Gallagher
Vice President License Renewal Projects
AmerGen Energy Company, LLC
200 Exelon Way
Kennett Square, PA 19348

with copies to:

Frederick W. Polaski
Manager License Renewal
Exelon Nuclear
200 Exelon Way
Kennett Square, PA 19348

Albert A. Fulvio
License Renewal Senior Project Manager
Exelon Nuclear
200 Exelon Way
Kennett Square, PA 19348

1.3 PURPOSE

This document provides information required by 10 CFR Part 54 to support the application for a renewed license for Three Mile Island Nuclear Station Unit 1. The application contains technical information required by 10 CFR 54.21 and environmental information required by 10 CFR 54.23. The information contained herein is intended to provide the NRC with an adequate basis to make the findings required by 10 CFR 54.29.

1.4 DESCRIPTION OF THE PLANT

The Three Mile Island Nuclear Station Unit 1 (TMI-1) is a single unit facility. It is located on Three Mile Island, which is situated in the Susquehanna River, in Londonderry Township of Dauphin County, Pennsylvania, about 2.5 miles north of the southern tip of Dauphin County. In 1999, as part of the restructuring of the electric utility industry in the United States, Three Mile Island Nuclear Station Unit 1 was acquired by and the license transferred to AmerGen Energy Company, LLC.

The nuclear steam supply system for TMI-1 is a pressurized water reactor that was designed and supplied by Babcock and Wilcox (B&W). The Three Mile Island Nuclear Station Unit I was initially licensed to operate at a rated power level of 2535 MWt. License Amendment No. 143, dated 7/26/1988, authorized a 1.3 percent increase in the licensed rated power level to 2568 MWt.

Also located on Three Mile Island is TMI-2, which is owned by First Energy Corporation. It has been shut down since the March 28, 1979 accident. TMI-2 is now in a safe storage mode called Post Defueling Monitored Storage (PDMS). The only TMI-2 systems, structures or components (SSCs) that are relied upon for the operation of TMI-1 are the SBO Diesel Generator Building and the TMI-2 Fuel Handling Building. BothTMI-2 SSCs that are required for the operation of TMI-1 were reviewed for applicability as described in section 2.1, “Scoping and Screening Methodology.” Access to TMI-2 facilities is permitted by easements.

1.5 APPLICATION STRUCTURE

This license renewal application is structured in accordance with Regulatory Guide 1.188, “Standard Format and Content for Applications to Renew Nuclear Plant Operating Licenses,” and NEI 95-10, "Industry Guideline for Implementing the Requirements of 10 CFR Part 54 - The License Renewal Rule”. In addition, Section 3, Aging Management Review Results and Appendix B, Aging Management Programs, are structured to address the guidance provided in NUREG-1800, “Standard Review Plan for Review of License Renewal Applications for Nuclear Power Plants”. NUREG-1800 references NUREG-1801, “Generic Aging Lessons Learned (GALL) Report.” NUREG-1801 was used to determine the adequacy of existing aging management programs and which existing programs should be augmented for license renewal. The results of the aging management review, using NUREG-1801, have been documented and are illustrated in table format in Section 3, “Aging Management Review Results,” of this application.

The application is divided into the following major sections:

Section 1 – Administrative Information

This section provides the administrative information required by 10 CFR 54.17 and 10 CFR 54.19. It describes the plant and states the purpose for this application. Included in this section are the names, addresses, business descriptions, and organization and management descriptions of the applicant, as well as other administrative information. This section also provides an overview of the structure of the application, general references, and a listing of acronyms used throughout the application.

Section 2 – Scoping and Screening methodology for identifying structures and components subject to aging management review, and implementation results

This section describes and justifies the methods used in the integrated plant assessment to identify those structures and components subject to an aging management review in accordance with the requirements of 10 CFR 54.21(a)(2). These methods consist of: 1) scoping, which identifies the systems, structures, and components that are within the scope of 10 CFR 54.4(a), and 2) screening under 10 CFR 54.21(a)(1), which identifies those in-scope structures and components that perform their intended function without moving parts or a change in configuration or properties, and that are not subject to replacement based on a qualified life or specified time period. Additionally, the results for systems and structures are described in this section. Scoping results are presented in Section 2.2, "Plant Level Scoping Results." Screening results are presented in Sections 2.3, 2.4, and 2.5.

The screening results consist of lists of components or component groups and structures that require aging management review. Brief descriptions of mechanical systems and structures within the scope of license renewal are provided as background information. Mechanical system and structure

intended functions are provided for in-scope systems and structures. For each in-scope system and structure, components requiring an aging management review are identified, associated component intended functions are identified, and appropriate reference to the Section 3 Table providing the aging management review results is made.

Selected structural and electrical component groups, such as component supports and electrical cables, were evaluated as commodities. Under the commodity approach, selected structural and electrical component groups were evaluated based upon common environments and materials. Components requiring an aging management review are presented in Sections 2.4 and 2.5. Component intended functions and reference to the applicable Section 3 Table are provided.

Section 3 – Aging Management Review Results

10 CFR 54.21(a)(3) requires a demonstration that the effects of aging will be adequately managed so that the intended functions will be maintained consistent with the current licensing basis throughout the period of extended operation. Section 3 presents the results of the aging management reviews. Section 3 is the link between the scoping and screening results provided in Section 2 and the aging management programs provided in Appendix B.

Aging management review results are presented in tabular form, in a format in accordance with NUREG-1800, "Standard Review Plan for Review of License Renewal Applications." For mechanical systems, aging management review results are provided in Sections 3.1 through 3.4 for the reactor vessel, internals, and reactor coolant system, engineered safety features systems, auxiliary systems, and steam and power conversions systems. Aging management review results for containments, structures, and component supports are provided in Section 3.5. Aging management review results for electrical and instrumentation and controls are provided in Section 3.6.

Tables are provided in each of these sections in accordance with NUREG-1800, which provide aging management review results for components, materials, environments, and aging effects which are addressed in NUREG-1801, and information regarding the degree to which the proposed aging management programs are consistent with those recommended in NUREG-1801.

Section 4 – Time-Limited Aging Analyses

Time-limited aging analyses (TLAAs), as defined by 10 CFR 54.3, are listed in this section. This section includes each of the TLAAs identified in the NRC Standard Review Plan for License Renewal Applications and in plant-specific analyses. This section includes a summary of the time-dependent aspects of the analyses. A demonstration is provided to show that the analyses remain valid for the period of extended operation, the analyses have been projected to the end of the period of extended operation, or the effects of aging on the intended function(s) will be adequately managed for the period of extended operation, consistent with 10 CFR 54.21(c)(1)(i)-(iii).

Appendix A –Updated Final Safety Analysis Report Supplement

As required by 10 CFR 54.21(d), the Updated Final Safety Analysis Report (UFSAR) supplement contains a summary of activities credited for managing the effects of aging for the period of extended operation. In addition, summary descriptions of time-limited aging analyses evaluations are provided.

Appendix B – Aging Management Programs

Appendix B describes the programs and activities that are credited for managing aging effects for components or structures during the period of extended operation based upon the aging management review results provided in Section 3 and the time-limited aging analyses results provided in Section 4.

The second and third sections of Appendix B discuss those programs that are contained in Section XI and Section X, respectively, of NUREG-1801. A description of the aging management program is provided and a conclusion based upon the results of an evaluation to each of the ten elements provided in NUREG-1801. In some cases, exceptions and justifications for managing aging are provided for specific NUREG-1801 elements. Additionally, operating experience related to the aging management program is provided.

The second section of Appendix B also addresses each of the ten program elements for programs that are credited for managing aging that are not evaluated in NUREG-1801.

Appendix C – Commodity Groups (Optional)

Appendix C is not used.

Appendix D – Technical Specification Changes

This Appendix satisfies the requirement in 10 CFR 54.22 to identify technical specification changes or additions necessary to manage the effects of aging during the period of extended operation. There were no Technical Specification Changes identified necessary to manage the effects of aging during the period of extended operation.

Appendix E – Environmental Information – Three Mile Island Nuclear Station Unit 1

This Appendix satisfies the requirements of 10 CFR 54.23 to provide a supplement to the environmental report that complies with the requirements of subpart A of 10 CFR Part 51 for TMI-1.

1.6 ACRONYMS

Acronym	Meaning
AFBV	Auxiliary and Fuel Handling Building Ventilation Systems
AFU	Air filtration unit
AHU	Air handling unit
AMP	Aging Management Program
AMR	Aging Management Review
AS	Auxiliary Steam System
ASME	American Society of Mechanical Engineers
ASTM	American Society for Testing and Materials
ATWS	Anticipated transients without scram
CAR	Condensers & Air Removal Systems
CASS	Cast austenitic stainless steel
CBV	Control Building Ventilation System
CCCW	Closed Cycle Cooling Water System
CF	Core Flood System
CFR	Code of Federal Regulations
CH	Cranes and Hoists
CI	Containment Isolation System
CLB	Current licensing basis
CO	Condensate System
CRDS	Control Rod Drive System
CUF	Cumulative Usage Factor
CW	Circulating Water System
DBA	Design basis accident
DBD	Design basis document
DBE	Design basis event
DGBV	Diesel Generator Building Ventilation System
DHR	Decay Heat Removal System
EAF	Environmentally Assisted Fatigue
ECCS	Emergency Core Cooling System
EDGA	Emergency Diesel Generators and Auxiliary Systems
EF	Emergency Feedwater System
EFPY	Effective full-power years

Acronym	Meaning
EPRI	Electric Power Research Institute
EQ	Environmental qualification
ES	Extraction Steam System
FAC	Flow-accelerated corrosion
FHAR	Fire Hazards Analysis Report
FHS	Fuel Handling and Fuel Storage System
FO	Fuel Oil System
FP	Fire Protection System
FSSD	Fire safe shutdown
FW	Feedwater System
GALL	Generic Aging Lessons Learned Report NUREG 1801
GL	Generic Letter
HELB	High energy line break
HEPA	High efficiency particulate air
HM	Hydrogen Monitoring System
HVAC	Heating, ventilation, and air conditioning
HX	Heat exchanger
I & C	Instrumentation and controls
IASCC	Irradiation-assisted stress corrosion cracking
IBV	Intermediate Building Ventilation Systems
ICA	Instrument and Control Air System
IEEE	Institute of Electrical and Electronics Engineers
IGSCC	Intergranular stress corrosion cracking
IN	Information Notice
INPO	Institute of Nuclear Power Operations
IPA	Integrated plant assessment
ISI	Inservice inspection
ISPV	Intake Screen and Pump House Ventilation System
IST	Inservice testing
LBB	Leak before break
LER	Licensee event report
LGS	Liquid and Gas Sampling System
LLRT	Local leak rate test
LOCA	Loss-of-coolant accident
LRA	License renewal application

Acronym	Meaning
MCC	Motor control center
MFED	Miscellaneous Floor and Equipment Drains System.
MG	Motor generator
MGA	Main Generator and Auxiliary Systems
MIC	Microbiologically influenced corrosion
MOV	Motor-operated valve
MS	Main Steam System
MSIV	Main steam isolation valve
MSV	Main stop valve
MTAS	Main turbine and auxiliary systems
MUP	Make-up and Purification System (High Pressure Injection)
MV	Miscellaneous HVAC Systems
NBI	Nuclear boiler instrumentation
NDE	Nondestructive examination
NEI	Nuclear Energy Institute
NFPA	National Fire Protection Association
NRC	Nuclear Regulatory Commission
OCCW	Open Cycle Cooling Water System
OE	Operating experience
P&ID	Piping and instrumentation diagram
PCHV	Primary Containment Heating and Ventilation System
PM	Preventive maintenance
PTS	Pressurized Thermal Shock
P-T curves	Pressure-temperature limit curves
PUA	Plant-unique analyses
RBPC	Reactor Building Purge and Atmospheric Cleanup System
RBS	Reactor Building Spray System
RBSD	Reactor Building Sump and Drain System
RCPB	Reactor coolant pressure boundary
RCS	Reactor Coolant System
RG	Regulatory guide
RHCS	Reactor head cooling system
RPS	Reactor protection system
RT_{NDT}	nil-ductility transition reference temperature
RV	Reactor Vessel

Acronym	Meaning
RVI	Reactor Vessel Internals
RW	Radwaste Systems
SBO	Station Blackout or SBO Diesel and UPS Diesel System
SCC	Stress corrosion cracking
SFC	Spent Fuel Cooling System
SG	Steam Generator
SIWT	Sewage and Industrial Waste Treatment Systems
SRV	Safety relief valve
SSCs	Systems, structures, and components
SSE	Safe shutdown earthquake
STA	Steam Turbine and Auxiliaries Systems
SWS	Service water system
TB	Turbine building
TCV	Turbine control valve
TID	Total integrated dose
TLAAs	Time-limited aging analyses
TMI-1	Three Mile Island Nuclear Station Unit 1
UFSAR	Updated Final Safety Analysis Report
UHS	Ultimate heat sink
USE	Upper-shelf energy
WTD	Water Treatment & Distribution System

1.7 GENERAL REFERENCES

1.7.1 10 CFR 54, "Requirements for Renewal of Operating Licenses for Nuclear Power Plants."

1.7.2 NEI 95-10, "Industry Guidelines for Implementing the Requirements of 10 CFR Part 54 – The License Renewal Rule," Revision 6, June 2005.

1.7.3 Regulatory Guide 1.188, "Standard Format and Content for Applications to Renew Nuclear Power Plant Operating Licenses", Rev 1.

1.7.4 NUREG-1800, "Standard Review Plan for Review of License Renewal Applications for Nuclear Power Plants" United States Nuclear Regulatory Commission, Rev 1.

1.7.5 NUREG-1801, "Generic Aging Lessons Learned (GALL) Report," United States Nuclear Regulatory Commission, Rev 1.

1.7.6 10 CFR 50.48, "Fire Protection."

1.7.7 10 CFR 50.49, "Environmental Qualification of Electric Equipment Important to Safety for Nuclear Power Plants."

1.7.8 10 CFR 50.62, "Requirements for Reduction of Risk From Anticipated Transients Without Scram (ATWS) Events for Light-Water-Cooled Nuclear Power Plants."

1.7.9 10 CFR 50.63, "Loss of All Alternating Current Power."

1.7.10 10 CFR 50.61, "Pressurized Thermal Shock."

1.7.10 10 CFR 50.65, "Requirements for Monitoring the Effectiveness of Maintenance at Nuclear Power Plants."

1.7.11 10 CFR 50, Appendix B, "Quality Assurance Criteria for Nuclear Power Plants and Fuel Reprocessing Plants."

1.7.12 10 CFR 51, "Environmental Protection Regulations for Domestic Licensing and Related Regulatory Functions."

1.7.13 NUREG-0800, Section 9.5.1, Appendix C, Supplemental Fire Protection Review Criteria for License Renewal, Revision 5, March 2007.

1.7.14 NUREG-0933, A Prioritization of Generic Safety Issues, U.S. Nuclear Regulatory Commission, September 2007.

1.7.15 Non-Class I Mechanical Implementation Guideline and Mechanical Tools, Revision 4. EPRI, Palo Alto, CA: 2006. 1010639.

1.7.16 Plant Support Engineering: License Renewal Electrical Handbook, Revision 1 to EPRI Report 1003057. EPRI, Palo Alto, CA: 2007. 1013475.

1.7.17 Aging Effects for Structures and Structural Components (Structural Tools), Revision 1. EPRI, Palo Alto, CA: 2003. 1002950.

2.0 SCOPING AND SCREENING METHODOLOGY FOR IDENTIFYING STRUCTURES AND COMPONENTS SUBJECT TO AGING MANAGEMENT REVIEW, AND IMPLEMENTATION RESULTS

This section describes the process for identifying structures and components subject to aging management review in the Three Mile Island Nuclear Station Unit 1 (TMI-1) License Renewal integrated plant assessment. For the systems, structures and components (SSCs) within the scope of License Renewal, 10 CFR 54.21(a)(1) requires the License Renewal applicant to identify and list those structures and components subject to an aging management review (AMR). 10 CFR 54.21(a)(2) further requires that the methods used to implement the requirements of 10 CFR 54.21(a)(1) be described and justified. Section 2 of this application satisfies these requirements.

The process is performed in two steps. *Scoping* refers to the process of identifying the plant systems and structures that are to be included in the scope of License Renewal in accordance with 10 CFR 54.4. The intended functions that are the bases for including the systems and structures in the scope of License Renewal are also identified during the scoping process. *Screening* is the process of determining which components associated with the in scope systems and structures are subject to an AMR in accordance with 10 CFR 54.21(a)(1) requirements. A detailed description of the TMI-1 scoping and screening process is provided in Section 2.1.

Also located on Three Mile Island is Three Mile Island Nuclear Station Unit 2 (TMI-2), which is owned by First Energy Corporation. TMI-2 has been shut down since the March 28, 1979 accident and is now in a safe storage mode called Post Defueling Monitored Storage (PDMS). All TMI-2 plant systems and structures required for the operation of TMI-1 were reviewed as described in Section 2.1 to determine whether these systems and structures were to be included in the scope of License Renewal in accordance with 10 CFR 54.4. The only TMI-2 systems, structures or components (SSC's) that are relied upon for the operation of TMI-1 are the SBO Diesel Generator Building and the TMI-2 Fuel Handling Building.

The scoping and screening methodology is consistent with the guidelines presented in NEI 95-10, “Industry Guidelines for Implementing the Requirements of 10 CFR Part 54 – The License Renewal Rule,“ Rev. 6 (Reference 1.7.2). The plant level scoping results identify the systems and structures within the scope of License Renewal in Section 2.2. The screening results identify structures and components subject to aging management review in the following LRA sections:

- Section 2.3 for mechanical systems
- Section 2.4 for structures
- Section 2.5 for electrical systems/commodity groups.

2.1 SCOPING AND SCREENING METHODOLOGY

2.1.1 INTRODUCTION

This introduction provides an overview of the scoping and screening process used at the Three Mile Island Nuclear Station Unit 1 (TMI-1). Subsequent sections provide details of how the process was implemented.

The methodology began with scoping. The initial step in the scoping process was to define the entire plant in terms of systems and structures. These systems and structures were evaluated against the scoping criteria in 10 CFR 54.4(a)(1), (a)(2), and (a)(3), to determine if they performed or supported a 10 CFR 54.4(a)(1) or 10 CFR 54.4(a)(2) intended function, or performed a 10 CFR 54.4(a)(3) function that demonstrates compliance with the requirements of one of the five regulated events within the scope of License Renewal. For the systems and structures determined to be in scope, the intended functions that are the bases for including the systems and structures in scope were also identified. Scoping evaluations were documented in a System and Structure Scoping Report.

If any portion of a system or structure met the scoping criteria of 10 CFR 54.4, the system or structure was included in the scope of License Renewal. Mechanical systems and structures were then further evaluated to determine those mechanical and structural components that perform or support the identified intended functions. The in scope boundaries of mechanical systems and structures were developed and are described in Sections 2.3 and 2.4. These boundaries are also depicted on the License Renewal boundary drawings. The boundaries of the mechanical systems and structures within the scope of License Renewal are highlighted in color. Structures and components within the scope of License Renewal are shown in green, except nonsafety-related components that are within the scope of License Renewal to preclude physical or spatial interaction, or provide structural support to safety-related SSCs, which are shown in red. Additional details on scoping evaluations and boundary drawing development are provided in Section 2.1.5.

Electrical and instrumentation and control (I&C) systems were scoped, like mechanical systems and structures, per the scoping criteria in 10 CFR 54.4(a)(1), (a)(2), and (a)(3). Electrical and I&C components within the in scope electrical and I&C systems were conservatively included in the scope of License Renewal, regardless of function. Likewise, electrical and I&C components within the in scope mechanical systems were conservatively included in the scope of License Renewal. Consequently, further system and component evaluations to scope in or scope out individual electrical and I&C components were not required. Additional details on electrical and I&C system scoping are provided in Section 2.1.5.

After completion of the scoping and boundary evaluations, the screening process evaluated the in scope structures and components to identify the long-lived, passive structures and components subject to an aging management review,

along with the structure and component passive intended functions. Additional details on the screening process are provided in Section 2.1.6.

Selected components, such as equipment supports, structural items (e.g., penetration seals, structural bolting, insulation), and passive electrical components, were more effectively scoped and/or screened as commodities. As such, they were not evaluated with the individual system or structure, but were evaluated collectively as a commodity group. Commodity groups are identified in Table 2.2-1. The passive electrical commodities are identified in Section 2.5.2. Commodity groups utilized are consistent with NUREG-1800 Table 2.1-5 and previous License Renewal applications accepted by the NRC.

Figure 2.1-1 provides a flowchart of the general scoping and screening process.

FIGURE 2.1-1
TMI-1 Scoping and Screening Flowchart

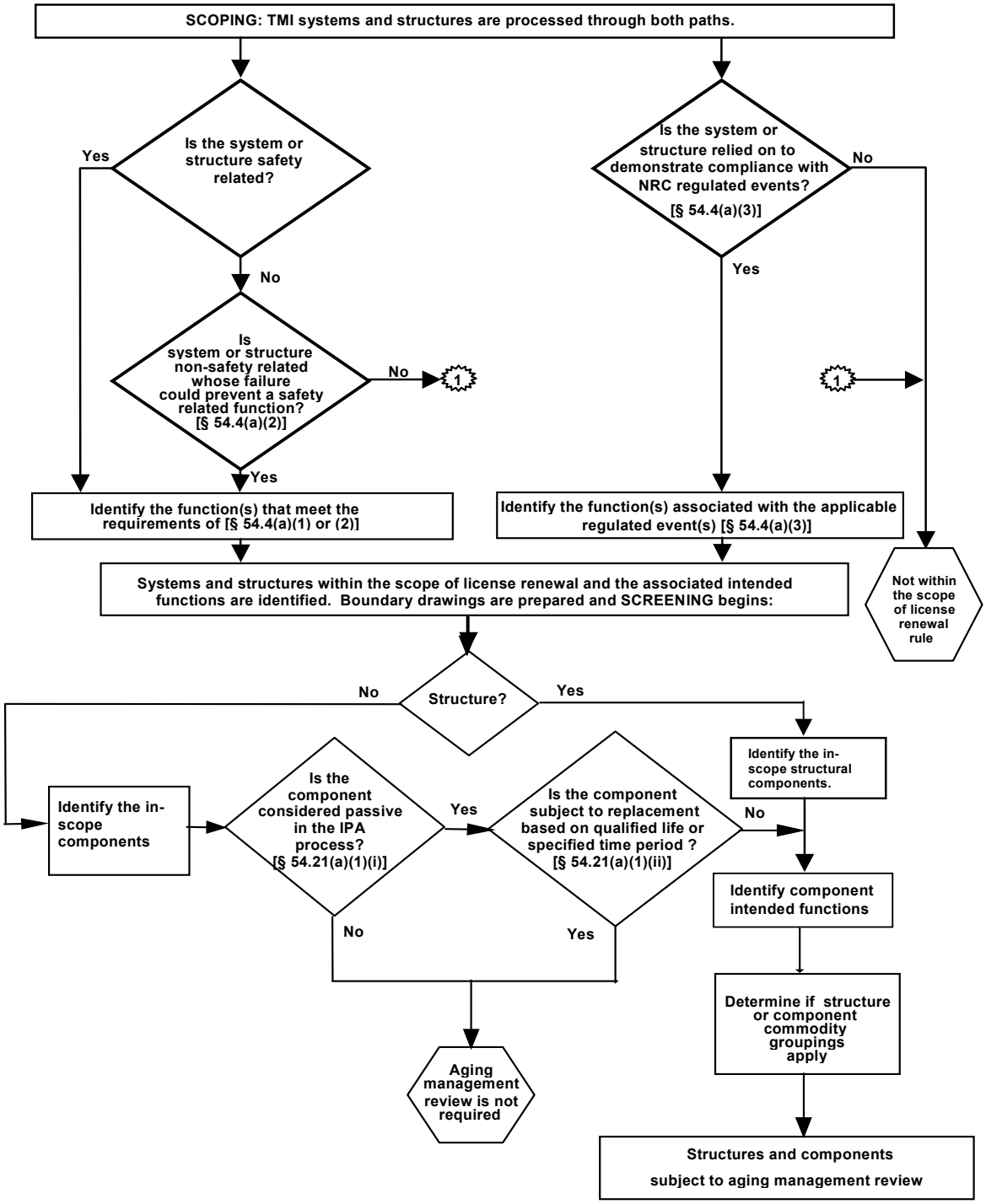

2.1.2 INFORMATION SOURCES USED FOR SCOPING AND SCREENING

A number of different current license basis (CLB) and design basis information sources were utilized in the scoping and screening process. The CLB for TMI-1 is consistent with the definition provided in 10 CFR 54.3. The significant source documentation is discussed below.

These source documents are readily available in hard copy or electronic format. Document records such as licensing correspondence and NRC Safety Evaluation Reports are available in a word-searchable database, such that applicable documents can be identified and located by searching the appropriate topic.

2.1.2.1 Updated Final Safety Analysis Report

The TMI-1 Updated Final Safety Analysis Report (UFSAR) follows the established Guidelines published by the Division of Reactor Licensing, "A Guide for Organization and Contents of Safety Analysis Reports," dated June 30, 1966, and the applicable portions of the USAEC (USNRC) Rules and Regulations, 10CFR50, "Licensing of Production and Utilization Facilities." The TMI-1 UFSAR has since been updated regularly in accordance with the requirements of 10 CFR 50.71(e). The UFSAR provided significant input for system and structure descriptions and functions.

2.1.2.2 Fire Hazards Analysis Report

The Fire Hazards Analysis Report (FHAR) describes the fire protection configuration for the confinement, detection, and extinguishment of fires, and demonstrates the capability to achieve and maintain safe shutdown conditions in the event of a fire, in support of the Fire Protection Program functions.

2.1.2.3 Environmental Qualification Master List

The scope of the electrical equipment and components that must be environmentally qualified for use in a harsh environment at TMI-1 is identified in the Environmental Qualification (EQ) Master List. This document is a database listing of equipment and components, and includes fields that identify specific equipment information such as manufacturer, plant location and qualification level. The EQ Master List data has been migrated to the TMI-1 Component Record List (CRL). The CRL includes an Environmental Qualification data field, and this field is used to identify the EQ components from the EQ Master List. The CRL EQ data field is a design quality field, which means the data is controlled and has been verified accurate.

2.1.2.4 Maintenance Rule Database

The Maintenance Rule Database documents the results of Maintenance Rule scoping for TMI-1 systems and structures. The Maintenance Rule Database provided an additional source of information to identify system and structure functions.

2.1.2.5 Preliminary Safety Analysis Report (PSAR)

This report was submitted to the Atomic Energy Commission in support of the application for a construction permit and a facility license to initially operate the Three Mile Island Nuclear Station Unit 1. The PSAR included the principal design criteria, with description and analysis of how the various plant systems and components were designed to satisfy the principal design criteria.

2.1.2.6 Design Basis Documents

System Design Basis Documents (DBD) are available for selected TMI-1 systems. Design Basis Documents provide detailed descriptions of the associated system design basis, including system functions and design requirements. The system DBD was reviewed, when available, during the system scoping review.

2.1.2.7 Controlled Plant Component Database

TMI-1 maintains a controlled plant component database that contains component level design and maintenance information. The plant component database is called the Component Record List (CRL). The CRL lists plant components at the level of detail for which discrete maintenance or modification activities typically are performed. At TMI-1 the CRL provides a comprehensive listing of plant components. Component type and unique component identification numbers identify each component in the database.

2.1.2.8 Other CLB References

NRC Safety Evaluation Reports include NRC staff review of various TMI-1 submittals, and may include licensee commitments.

Licensing correspondence includes relief requests, Licensee Event Reports, and responses to NRC communications such as NRC bulletins, generic letters or enforcement actions, and may include licensee commitments.

Engineering drawings provide system, structure and component configuration details for TMI-1. These drawings were used in conjunction with the plant component database records to support scoping and screening evaluations.

Engineering evaluations and calculations can provide additional information about the requirements or characteristics associated with the evaluated systems, structures or components.

2.1.3 TECHNICAL BASIS DOCUMENTS

Technical basis documents were prepared in support of the License Renewal project. Engineers experienced in nuclear plant systems, programs and operations prepared the basis documents. Basis documents contain technical evaluations and bases for decisions or positions associated with various License Renewal requirements. Basis documents are prepared, reviewed and approved

in accordance with controlled project procedures, and are based on the CLB source documents described in Section 2.1.2.

The following sections describe the significant technical basis documents associated with the TMI-1 scoping and screening methodology.

2.1.3.1 License Renewal Systems and Structures List

One of the first steps necessary to begin the License Renewal scoping process was to identify a comprehensive list of systems and structures to be evaluated for License Renewal scoping. While there exists a variety of document sources that identify and list TMI-1 systems and structures, no single source provided the comprehensive list in a format appropriate for 10 CFR 54.4 License Renewal system and structure scoping. Therefore, a basis document was prepared to establish a comprehensive list of License Renewal systems and structures, and to document the basis for the list. Starting with the systems and structures list contained in an approved engineering standard, the list was reviewed against the CRL, the TMI-1 UFSAR, plant design drawings, the maintenance rule database, and other plant design documents. The basis document grouped License Renewal systems and structures into the following categories:

- Reactor Vessel, Internals, and Reactor Coolant System
- Engineered Safety Features
- Auxiliary Systems
- Steam and Power Conversion Systems
- Electrical Systems
- Structures and Component Supports

When grouping the TMI-1 License Renewal systems and structures into these categories, the guidance of NUREG-1801 “Generic Aging Lessons Learned (GALL) Report” was utilized. The basis document also identifies the components that are evaluated as commodity groups. The complete list of systems, structures and commodity groups evaluated for License Renewal is provided in Section 2.2 of this application.

Certain structures and equipment were excluded at the outset because they do not meet criteria 10 CFR 54.4(a)(1), (a)(2) or (a)(3). These include: driveways and parking lots, temporary equipment, health physics equipment, portable measuring and testing equipment, tools and motor vehicles.

2.1.3.2 Identification of Safety-related Systems and Structures

Safety-related systems and structures are included in the scope of License Renewal in accordance with 10 CFR 54.4(a)(1) scoping criterion. TMI-1 systems and structures that have been classified as safety-related are identified as “Q” in the controlled quality classification data field in the CRL. TMI-1 quality classification procedures were reviewed against the License Renewal “Safety-related” scoping criterion in 10 CFR 54.4(a)(1), to confirm that TMI-1 safety-related classifications are consistent with License Renewal requirements. This review was documented in a technical basis document. The basis document

provides a summary list of the systems and structures that are safety-related at TMI-1. These systems and structures were included in the scope of License Renewal under the 10 CFR 54.4(a)(1) scoping criteria.

The TMI-1 quality classification procedure definition of safety-related (Q) is as follows:

> *A structure, system or component shall be classified as Safety Related (Q) if designed to remain functional for all design basis conditions necessary to ensure:*
>
> - *Integrity of reactor coolant pressure boundary,*
> - *Capability to shutdown reactor and maintain it in a safe (hot) shutdown condition, or*
> - *Capability to prevent or mitigate consequences of accidents which could result in potential off-site exposures comparable to guideline exposures of 10 CFR 100*

This definition is nearly identical to 10 CFR 54.4(a)(1). The differences are addressed as follows:

Design Basis Events

The TMI-1 procedure definition refers to “all design basis conditions” while 10 CFR 54.4(a)(1) is more specific, referring to design basis events as defined in 10 CFR 50.49(b)(1). For TMI-1 License Renewal, an additional technical basis document was prepared to confirm that all applicable design basis events were considered. The basis document documented a review of design basis internal and external events, including anticipated operational occurrences, design basis accidents, external events, and natural phenomena as described in the current licensing basis, and provided a summary list of those additional systems and structures relied upon to remain functional to ensure 10 CFR 54.4(a)(1) functions during and following such events. Systems and structures required to support 10 CFR 54.4(a)(1) functions may be classified safety-related at TMI-1, and as such included in the scope of License Renewal under 10 CFR 54.4(a)(1). Nonsafety-related systems and structures required to support 10 CFR 54.4(a)(1) functions were included in the scope of License Renewal under 10 CFR 54.4(a)(2).

Exposure Guidelines

The TMI-1 quality classification procedure “Safety-related” definition refers to 10 CFR 100 for accident exposure guidelines. The License Renewal rule references the guidelines in 10 CFR 50.34(a)(1), 10 CFR 50.67(b)(2), or 10 CFR 100.11, as applicable. These different exposure guidelines appear in three different Code sections to address similar accident analyses performed by licensees for different reasons. The guidelines in 10 CFR 50.34(a)(1) are applicable to facilities seeking a construction permit, and are therefore not applicable to TMI-1 License Renewal. The guidelines in 10 CFR 50.67(b)(2) were applied to the loss-of-coolant accident (LOCA) and fuel handling accident

(FHA) analyses and therefore utilize 10 CFR 50.67 dose acceptance criteria. All other accidents use 10 CFR 100 dose acceptance criteria.

Hot Shutdown

The TMI-1 definition refers to the hot shutdown condition. Systems required to achieve cold shutdown at TMI-1 are also classified safety-related and included in the scope of License Renewal.

When supplemented with the broad review of CLB design basis events, the TMI-1 quality classification procedure definition of “safety-related" is consistent with 10 CFR 54.4(a)(1), and results in a comprehensive list of safety-related systems and structures that were included in the scope of License Renewal. This is consistent with NUREG-1800 Section 2.1.3.1.1.

2.1.3.3 10 CFR 54.4(a)(2) Scoping Criteria

All nonsafety-related systems, structures, and components whose failure could prevent satisfactory accomplishment of any of the functions identified under 10 CFR 54.4 (a)(1), were included in the scope of License Renewal in accordance with 10 CFR 54.4(a)(2) requirements. To assure complete and consistent application of this scoping criterion, a technical basis document was prepared.

This License Renewal scoping criteria requires consideration of the following:

1. Nonsafety-related SSCs required to perform a function that supports a safety-related SSC.

2. Nonsafety-related systems connected to and providing structural support for a safety-related SSC.

3. Nonsafety-related systems with a potential for spatial interaction with safety-related SSCs.

4. Nonsafety-related mitigative plant design features that are part of the TMI-1 CLB

The first item is addressed during the scoping process, by identifying the nonsafety-related systems and structures required to support the accomplishment of a safety-related intended function under 10 CFR 54.4(a)(1), and then confirming that these supporting systems and structures are also included within the scope of License Renewal.

The remaining three items concern nonsafety-related systems with potential physical or spatial interaction with safety-related systems, structures and components. Scoping of these systems is the subject of NEI 95-10 Appendix F. To assure complete and consistent application of 10 CFR 54.4(a)(2) requirements and NEI 95-10, a technical basis document was prepared. The basis document documents a review of the CLB references relevant to physical or spatial interactions, including plant design features intended to assure failures will not prevent satisfactory accomplishment of required intended functions.

The basis document describes the TMI-1 approach to scoping of nonsafety-related systems with a potential for physical or spatial interaction with safety-related SSCs. TMI-1 chose to implement the preventive option as described in NEI 95-10, although certain mitigative plant features are also included within the scope of License Renewal. The basis document provides appropriate guidance to assure that License Renewal scoping for 10 CFR 54.4(a)(2) met the requirements of the License Renewal rule and NEI 95-10. See Section 2.1.5.2 for additional discussion of the application of this scoping criterion.

2.1.3.4 Systems and Structures Credited for Regulated Events

Technical basis documents were prepared to address License Renewal scoping of SSCs relied on in safety analyses or plant evaluations to perform a function that demonstrates compliance with the Commission's regulations for Fire Protection, Environmental Qualification, Anticipated Transients Without Scram, Station Blackout, and Pressurized Thermal Shock. These basis documents are summarized below:

Fire Protection

All systems, structures and components relied on in safety analyses or plant evaluations to perform a function that demonstrates compliance with the Commission's regulations for Fire Protection (10 CFR 50.48) were included in the scope of License Renewal in accordance with 10 CFR 54.4(a)(3) requirements.

The scope of systems and structures required for the fire protection program to comply with the requirements of 10 CFR 50.48 includes:

- Systems and structures required to demonstrate post-fire safe shutdown capabilities
- Systems and structures required for fire detection and suppression
- Systems and structures required to meet commitments made to Appendix A of Branch Technical Position (BTP) APCSB 9.5-1

Recent NRC guidance, including NUREG-0800 Section 9.5.1 Appendix C (Reference 1.7.13) and NUREG-1801 scoping guidance for fire protection equipment, states that the scope of 10 CFR 50.48 goes beyond the protection of safety-related equipment, and also includes fire protection systems, structures and components needed to minimize the effects of a fire and to prevent the release of radioactive material to the environment. Fire protection system and structure scoping for TMI-1 is performed consistent with this guidance, and is documented in the technical basis document.

The fire protection technical basis document summarizes results of a detailed review of the plant's fire protection program documents that demonstrate compliance with the requirements of 10 CFR 50.48. The basis document provides a list of systems and structures credited in the plant's fire protection program documents. For the listed systems and structures, the basis document also identifies appropriate CLB references. The identified systems and structures were included in the scope of License Renewal under the 10 CFR 54.4(a)(3) scoping criteria.

The fire detection and suppression systems at TMI-1 are plant-wide systems that protect a wide variety of plant equipment. Not all portions of these systems are required to demonstrate compliance with 10 CFR 50.48. Some branches of the fire detection and suppression systems protect plant areas in which a fire would not impact any equipment important to safety, or significantly increase the risk of radioactive releases to the environment. Fire suppression and detection systems that are not included in the scope of License Renewal are identified and documented in the technical basis document. Portions of the fire suppression and detection systems that are not included in the scope of License Renewal are identified during the scoping process and documented in the scoping reports. System branches that have not been included within the scope of License Renewal can be isolated from the remaining in scope system by closing the associated isolation valve. The isolation valve is included within the scope of License Renewal.

Environmental Qualification

Criterion 10 CFR 54.4(a)(3) requires that all systems, structures and components relied on in safety analyses or plant evaluations to perform a function that demonstrates compliance with the Commission's regulations for Environmental Qualification (10 CFR 50.49) be included in the scope of License Renewal.

The TMI-1 Environmental Qualification (EQ) program includes safety-related electrical equipment, nonsafety-related electrical equipment whose failure under postulated environmental conditions could prevent satisfactory accomplishment of safety functions of the safety-related equipment, and certain post-accident monitoring equipment, as defined in 10 CFR 50.49(b)(1), 10 CFR 50.49(b)(2), and 10 CFR 50.49(b)(3) respectively. This equipment was included in the scope of License Renewal.

The environmental qualification basis document summarizes the results of a review of TMI-1 EQ program documents. The EQ basis document provides a list of systems that include EQ components. The EQ basis document also provides a list of structures that are credited to provide the physical boundaries for the postulated harsh environments, and contain environmentally qualified electrical equipment. These systems and structures were included in the scope of License Renewal under the 10 CFR 54.4(a)(3) scoping criteria.

Anticipated Transients Without Scram

Criterion 10 CFR 54.4(a)(3) requires that all systems, structures and components relied on in safety analyses or plant evaluations to perform a function that demonstrates compliance with the Commission's regulations for Anticipated Transients Without Scram (10 CFR 50.62) be included in the scope of License Renewal.

An Anticipated Transient Without Scram (ATWS) is a postulated operational transient that generates an automatic scram signal, accompanied by a failure of the reactor protection system to shutdown the reactor. The ATWS rule (10 CFR 50.62) requires improvements in the design and operation of pressurized water reactors to reduce the likelihood of failure to shutdown the reactor following anticipated transients, and to mitigate the consequences of an ATWS event. The

requirements for a PWR are to have equipment from sensor output to final actuation device, that is diverse from the Reactor Trip System, to automatically initiate the emergency feedwater system and initiate a turbine trip under conditions indicative of an ATWS. Each PWR manufactured by Babcock and Wilcox must have a diverse scram system from the sensor output to interruption of power to the control rods.

The ATWS basis document summarizes the results of a review of the TMI-1 current licensing basis with respect to ATWS. TMI-1 has the ATWS Mitigation System Actuation Circuitry (AMSAC), the Diverse Scram System (DSS), Main Turbine Trip from Feedwater Pump Trip (TTWFPT), and Heat Sink Protection System (HSPS), which together comprise a diverse scram system to mitigate the consequences of an ATWS event. The ATWS basis document provides a list of the systems required by 10 CFR 50.62 to reduce the risk from ATWS events. The basis document also provides a list of structures that are credited to provide physical support and protection for the credited ATWS systems. These systems and structures were included in the scope of License Renewal under the 10 CFR 54.4(a)(3) scoping criteria.

Station Blackout

Criterion 10 CFR 54.4(a)(3) requires that all systems, structures and components relied on in safety analyses or plant evaluations to perform a function that demonstrates compliance with the Commission's regulations for Station Blackout (10 CFR 50.63) be included in the scope of License Renewal.

A station blackout (SBO) event is a complete loss of alternating current (AC) electric power to the essential and nonessential switchgear buses in a nuclear power plant (i.e., loss of the offsite electric power system concurrent with generator trip and unavailability of the onsite emergency AC power sources). SBO does not include the loss of available AC power to buses fed by station batteries through inverters or by alternate AC sources, nor does it assume a concurrent single failure or design basis accident.

TMI-1 implemented plant modifications and procedures in response to 10 CFR 50.63 to enable the station to withstand and recover from a station blackout of a specified duration. TMI-1 capabilities, commitments and analyses that demonstrate compliance with 10 CFR 50.63 are documented in UFSAR Section 8.5 and in NRC safety evaluation reports and correspondence related to the SBO rule.

The NUREG-1800 and NUREG-1801 guidance on scoping of equipment relied on to meet the requirements of the SBO rule (10 CFR 50.63) for License Renewal has been incorporated into the TMI-1 scoping methodology. In accordance with the NUREG-1800 and NUREG-1801 requirements, the SSCs required to recover from the SBO event are included in the scope of License Renewal. Recovery is defined as the repowering of the plant ac distribution system from offsite sources and/or on site emergency ac sources. For TMI-1, this includes the portion of the plant electrical system used to connect the in scope ac distribution system equipment to offsite power and by definition recover from an SBO event. For TMI-1, the boundary between the electrical transmission

system and the plant electrical distribution system and equipment has been defined at the first circuit breakers upstream of the 1A and 1B Auxiliary and Main Transformers. Included in the scope of license renewal on the plant side of this boundary are: switchyard bus and connections, transmission conductors and connections, high voltage insulators, disconnect switches, circuit breakers, substation structures and supports, transformers and auxiliaries, and metal enclosed bus. There are no inaccessible medium voltage cables associated with the TMI-1 SBO recovery path. A simplified diagram of the recovery path and the primary plant electrical distribution is shown in Figure 2.1-2.

The SBO basis document summarizes the results of a review of the TMI-1 current licensing basis with respect to station blackout. The basis document provides lists of systems and structures credited in TMI-1 SBO evaluations. For the listed systems and structures, the basis document also identifies appropriate CLB references. These systems and structures were included in the scope of License Renewal under the 10 CFR 54.4(a)(3) scoping criteria.

Pressurized Thermal Shock

Criterion 10 CFR 54.4(a)(3) requires that all systems, structures and components relied on in safety analyses or plant evaluations to perform a function that demonstrates compliance with the Commission's regulations for Pressurized Thermal Shock (10 CFR 50.61) be included in the scope of License Renewal.

Pressurized Thermal Shock (PTS) is a potential pressurized water reactor (PWR) event or transient causing vessel failure due to severe overcooling (thermal shock) concurrent with, or followed by, significant pressure in the reactor vessel. The CLB shows that the TMI-1 reactor vessel has been demonstrated to meet the toughness requirements of 10 CFR 50.61 through its current 40-year end-of-license period. Sixty-year end-of-license fluence projections were prepared, and the components that are projected to meet the definition of beltline material after 60 years of neutron exposure were identified.

The PTS basis document summarizes the results of a review of the TMI-1 current licensing basis with respect to pressurized thermal shock. The basis document provides lists of systems containing components credited in TMI-1 PTS evaluations. These systems were included in the scope of License Renewal under the 10 CFR 54.4(a)(3) scoping criteria.

FIGURE 2.1-2
THREE MILE ISLAND UNIT 1
OFFSITE POWER FOR SBO

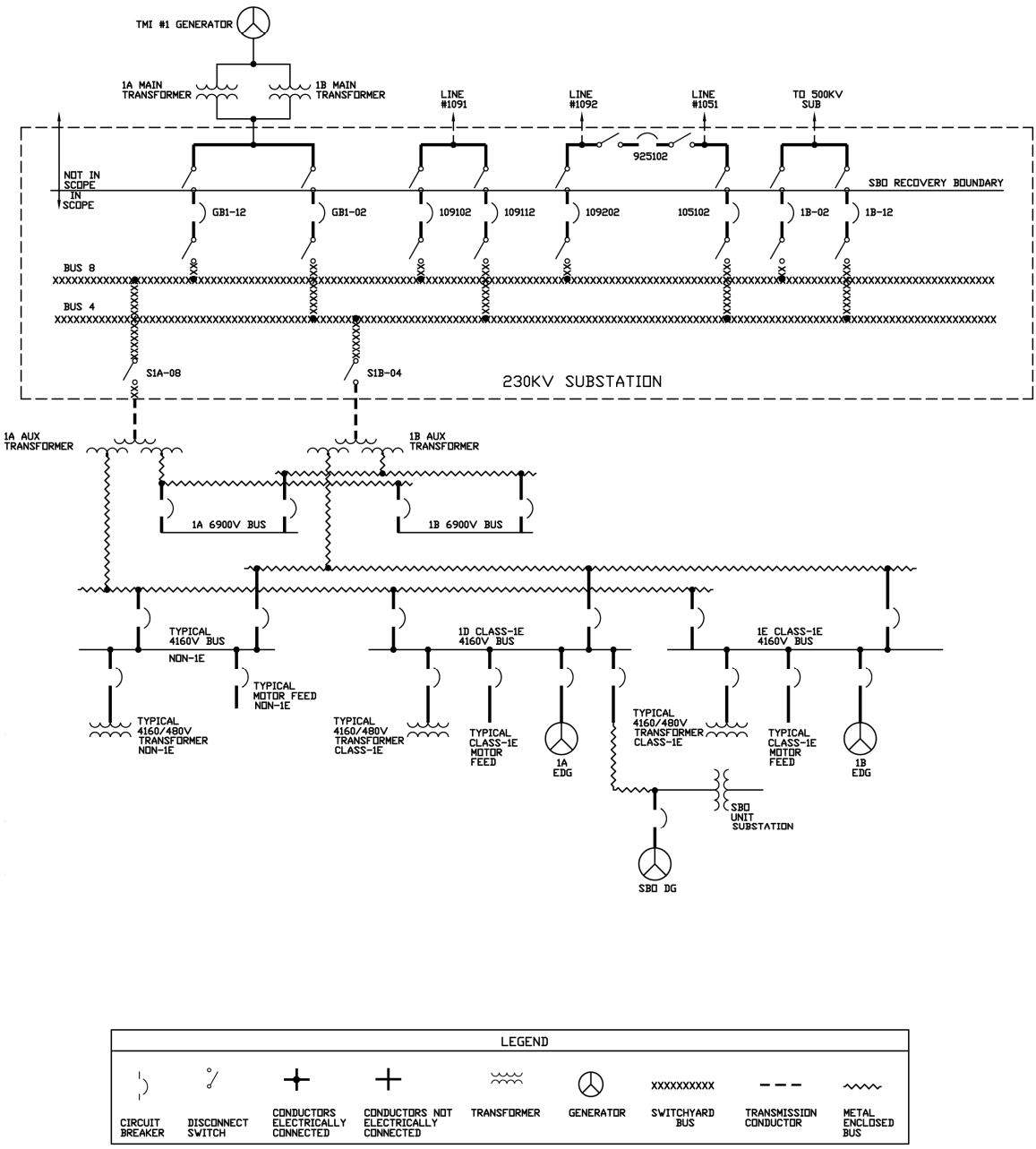

2.1.4 INTERIM STAFF GUIDANCE DISCUSSION

As lessons are learned during license renewal application reviews, the NRC staff has developed guidance documents to capture new insights or address emerging issues. To document these lessons learned, the staff has developed an interim staff guidance (ISG) process that provides guidance to future license renewal applicants until the emerging issues can be incorporated into the next revision of the license renewal guidance documents. Many of the previous issues have been closed and incorporated into license renewal guidance documents.

LR-ISG-19B	Cracking of Nickel-alloy Components in the Reactor Coolant Pressure Boundary
LR-ISG-2006-01	Corrosion of the Mark I Steel Containment Drywell Shell
LR-ISG-2006-02	Staff Guidance on Acceptance Review for Environmental Requirements
LR-ISG-2006-03	Staff Guidance for Preparing Severe Accident Mitigation Alternatives (SAMA) Analyses
LR-ISG-2007-01	Updating the LR-ISG Process to Include References to the Environmental Review Guidance Documents, References for the Recent Publication of Revision 1 of the License Renewal Guidance Documents, and Minor Revisions to Be Consistent with Current Staff Practices
LR-ISG-2007-02	Changes to Generic Aging Lesson Learned (GALL) Report Aging Management Program (AMP) XI.E6, “Electrical Cable Connections Not Subject to 10 CFR 50.49 Environmental Qualification Requirements”

The following sections provide a summary discussion of each of the ISG issues:

2.1.4.1 Cracking of Nickel-alloy Components in the Reactor Coolant Pressure Boundary (LR-ISG-19B)

This LR-ISG is open pending preparation of an augmented inspection program by the industry (i.e., NEI and EPRI). Guidance will be promulgated by the NRC following its review of the proposed industry program. The TMI-1 Nickel-Alloy Penetration Nozzles Welded to the Upper Reactor Vessel Closure Heads of Pressurized Water Reactors program is addressed in Section B.2.1.5. The Nickel-Alloy Aging Management Program, which manages the aging effects of reactor coolant pressure boundary nickel-alloy components other than the reactor vessel head penetrations, is addressed in Section B.2.2.1.

2.1.4.2 Corrosion of the Mark I Steel Containment Drywell Shell (LR-ISG-2006-01)

This Interim Staff Guidance was issued as final and is not applicable to TMI-1. This Interim Staff Guidance is only applicable to boiling water reactors with Mark I steel containment drywell shells, and is therefore not applicable to the TMI-1 pressurized water reactor design.

2.1.4.3 Staff Guidance on Acceptance Review for Environmental Requirements (LR-ISG-2006-02)

This Interim Staff Guidance has been issued for comment by the NRC.

2.1.4.4 Staff Guidance for Preparing Severe Accident Mitigation Alternatives (SAMA) Analyses (LR-ISG-2006-03)

This Interim Staff Guidance was issued as final and is applicable to TMI-1. The TMI-1 severe accident mitigation alternatives analysis provided as a part of Appendix E to this application is consistent with the guidance of NEI 05-01, Severe Accident Mitigation Alternatives (SAMA) Analysis Guidance Document, as discussed in this Interim Staff Guidance.

2.1.4.5 Updating the LR-ISG Process to Include References to the Environmental Review Guidance Documents, References for the Recent Publication of Revision 1 of the License Renewal Guidance Documents, and Minor Revisions to Be Consistent with Current Staff Practices (LR-ISG-2007-01)

The staff is developing this LR-ISG.

2.1.4.6 Changes to Generic Aging Lesson Learned (GALL) Report Aging Management Program (AMP) XI.E6, "Electrical Cable Connections Not Subject to 10 CFR 50.49 Environmental Qualification Requirements" (LR-ISG-2007-02)

The staff is developing this LR-ISG.

2.1.5 SCOPING PROCEDURE

The scoping process is the systematic process used to identify the TMI-1 systems, structures and components within the scope of the License Renewal rule. The scoping process was initially performed at the system and structure level, in accordance with the scoping criteria identified in 10 CFR 54.4(a). System and structure functions and intended functions were identified from a review of the source CLB documents. In scope boundaries were established and documented in the scoping evaluations, based on the identified intended functions. The in scope boundaries form the basis for identification of the in scope components, which is the first step in the screening process described in Section 2.1.6. System and structure scoping evaluations were documented and

have been retained in a License Renewal database. The system and structure scoping results are provided in Section 2.2.

The TMI-1 scoping process began with the development of a comprehensive list of plant systems and structures, as described in Section 2.1.3.1. The systems and structures were grouped into one of the following categories:

- Reactor Vessel, Internals, and Reactor Coolant System
- Engineered Safety Features
- Auxiliary Systems
- Steam and Power Conversion System
- Electrical Systems
- Structures and Component Supports

Each TMI-1 system and structure was then scoped for License Renewal using the criteria of 10 CFR 54.4(a). These criteria are briefly identified as follows:

- Title 10 CFR 54.4(a)(1) – Safety-related
- Title 10 CFR 54.4(a)(2) – Nonsafety-related affecting safety-related
- Title 10 CFR 54.4(a)(3) – The five regulated events:
  - Fire Protection (10 CFR 50.48)
  - Environmental Qualification, EQ (10 CFR 50.49)
  - Pressurized Thermal Shock (10 CFR 50.61)
  - Anticipated Transient Without Scram, ATWS (10 CFR 50.62)
  - Station Blackout, SBO (10 CFR 50.63)

The application of each of these criteria is discussed in Section 2.1.5.1, Section 2.1.5.2 and Section 2.1.5.3 below:

2.1.5.1 Safety-related – 10 CFR 54.4(a)(1)

In accordance with 10 CFR 54.4(a)(1), the systems, structures and components within the scope of License Renewal include:

> *Safety-related systems, structures and components which are those relied upon to remain functional during and following design-basis events (as defined in 10 CFR 50.49(b)(1)) to ensure the following functions –*
>
> *(i) The integrity of the reactor coolant pressure boundary;*
>
> *(ii) The capability to shutdown the reactor and maintain it in a safe shutdown condition; or*
>
> *(iii) The capability to prevent or mitigate the consequences of accidents that could result in potential offsite exposure comparable the guidelines in 10 CFR 50.34(a)(1), 10 CFR 50.67(b)(2), or 10 CFR 100.11, as applicable.*

At TMI-1, the safety-related systems and structures are identified in the Component Record List (CRL). The safety-related classifications in the TMI-1 CRL were established using a controlled procedure, with classification criteria

nearly identical to the above 10 CFR 54.4(a)(1) criteria. The classification criteria differences were evaluated in a License Renewal basis document (see Section 2.1.3.2) and accounted for during the License Renewal scoping process.

Safety-related classifications for systems and structures were based on system and structure descriptions and analyses in the UFSAR, or on design basis documents such as engineering drawings, evaluations or calculations. Systems and structures that are identified as safety-related in the UFSAR, in design basis documents or in the CRL have been classified as satisfying criteria of 10 CFR 54.4(a)(1) and have been included within the scope of License Renewal. The review also confirmed that all plant conditions, including conditions of normal operation, anticipated operational occurrences, design basis accidents, external events, and natural phenomena for which the plant must be designed, were considered for License Renewal scoping under 10 CFR 54.4(a)(1) criteria.

2.1.5.2 Nonsafety-related Affecting Safety-related – 10 CFR 54.4(a)(2)

In accordance with 10 CFR 54.4(a)(2), the systems, structures and components within the scope of License Renewal include –

- All nonsafety-related systems, structures and components whose failure could prevent satisfactory accomplishment of any of the functions identified in 10 CFR 54.4(a)(1)(i), (ii) or (iii).

This scoping criteria requires an assessment of nonsafety-related SSCs with respect to the following application or configuration categories:

- Functional support for safety-related SSC 10 CFR 54.4(a)(1) functions
- Connected to and provide structural support for safety-related SSCs
- Potential for spatial interactions with safety-related SSCs
- Mitigative plant design features that are part of the TMI-1 CLB

Each of these categories is discussed below:

Functional Support for Safety-related SSC 10 CFR 54.4(a)(1) Functions

This category addresses nonsafety-related SSCs that are required to function in support of a safety-related SSC intended function. The functional requirement distinguishes this category from the other categories, where the nonsafety-related SSCs are required only to maintain adequate integrity to preclude structural failure or spatial interactions. The nonsafety-related SSCs that were included in scope under this review, to support a safety-related SSC in performing its 10 CFR 54.4(a)(1) intended function, are identified on the License Renewal boundary drawings in green.

The TMI-1 UFSAR and other CLB documents were reviewed to identify nonsafety-related systems or structures credited with supporting satisfactory accomplishment of a safety-related function. Nonsafety-related systems or structures credited in CLB documents to support a

safety-related function have been included within the scope of License Renewal.

A supporting system review was completed as part of the scoping process. The scoping process was performed on a system and structure basis. The scoping evaluation for each system and structure was documented in a System and Structure Scoping Report. When a system was included in scope under 10 CFR 54.4(a)(1), the scoping evaluation included the identification of any additional systems or structures required to support the 10 CFR 54.4(a)(1) intended functions. It was then confirmed that these identified supporting systems and structures were also included in scope. Systems and structures required to support 10 CFR 54.4(a)(1) functions may be classified safety-related at TMI-1, and as such included in the scope of License Renewal under 10 CFR 54.4(a)(1). The nonsafety-related systems and structures identified by this review were included in the scope of License Renewal under 10 CFR 54.4(a)(2). The identification of supporting systems was not required for structures, as structural intended functions do not rely on supporting systems.

The next three 10 CFR 54.4(a)(2) scoping categories are the subject of NEI 95-10 Appendix F. The guidance requires that, when demonstrating that failures of nonsafety-related systems would not adversely impact on the ability to maintain intended functions, a distinction must be made between nonsafety-related systems that are connected to safety-related systems and those that are not connected to safety-related systems. For a nonsafety-related system that is connected to a safety-related system, the nonsafety-related system should be included within the scope of License Renewal up to and including the first anchor point past the safety-nonsafety interface, and appropriate aging management programs applied.

For nonsafety-related systems which are not connected to safety-related piping or components, or are beyond the first anchor point past the safety-nonsafety interface, but have a spatial relationship such that their failure could adversely impact on the performance of a safety-related SSC's intended function, the applicant has two options when performing its scoping evaluation; a mitigative option or a preventive option. When mitigative features (e.g., pipe whip restraints, jet impingement shields, spray and drip shields, seismic supports, flood barriers) are provided to protect safety-related SSCs from failures of nonsafety-related SSCs, this demonstration should show that mitigating devices are adequate to protect safety-related SSCs from failures of nonsafety-related SSCs regardless of failure location. If this level of protection can be demonstrated, then only the mitigative features need to be included within the scope of License Renewal. However, if an applicant cannot demonstrate that the mitigative features are adequate to protect safety-related SSCs from the consequences of failures of nonsafety-related SSCs, then the applicant should utilize the preventive option, which requires that the entire nonsafety-related SSC be brought into the scope of License Renewal.

The methodology for identification of TMI-1 SSCs that satisfy the 10 CFR 54.4(a)(2) scoping criterion was based on a review of applicable CLB documents,

plant specific and industry operating experience. The preventive option is utilized to demonstrate that safety-related SSCs are adequately protected from failure of nonsafety-related SSCs.

Connected to and Provide Structural Support for Safety-related SSCs

For a nonsafety-related piping system connected to a safety-related piping system, the nonsafety-related system was assumed to provide structural support to the safety-related system, unless otherwise confirmed by a review of the installation details. The entire nonsafety-related system was included in scope for 10 CFR 54.4(a)(2), up to one of the following:

1. A seismic anchor or at least two (2) supports in each of three (3) orthogonal directions (the supports were included in scope) that are equivalent to a seismic anchor in the TMI-1 CLB

2. A base-mounted component (e.g., pump, heat exchanger, tank, etc.) that is a rugged component and is designed not to impose loads on connecting piping. The license renewal scope should include the base-mounted component as it has a support function for the safety-related piping

3. A flexible connection that is considered a pipe stress analysis model end point when the flexible connection effectively decouples the piping system (i.e., does not support loads or transfer loads across it to connecting piping)

4. A free end of nonsafety-related piping, such as a drain pipe that ends at an open floor drain

5. A point where buried piping exits the ground. The buried portion of the piping should be included in the scope of license renewal. A determination that the buried piping is well founded on compacted soil that is not susceptible to liquefaction must be documented.

6. For nonsafety-related piping runs that are connected at both ends to safety-related piping the entire run of nonsafety-related piping was included in scope.

These scoping boundaries are determined from the physical installation details, and confirmed in cases by review of design drawings or visual inspection by plant walkdown where necessary.

Failure in the nonsafety-related piping beyond the above anchor or equivalent anchor locations would not impact structural support for the safety-related piping. The associated SSCs included in the scope of License Renewal are identified on the License Renewal boundary drawings in red. Note that if the connected nonsafety-related piping system contains water, steam or oil, then the in scope boundary may

extend beyond the locations described above due to potential spatial interaction.

Potential for Spatial Interactions with Safety-related SSCs

Nonsafety-related systems that are not connected to safety-related piping or components, or are beyond the first anchor point past the safety/nonsafety interface, and have a spatial relationship such that their failure could adversely impact on the performance of a safety-related SSC intended function, must be evaluated for License Renewal scope in accordance with 10 CFR 54.4(a)(2) requirements. As described in NEI 95-10 Appendix F, there are two options when performing this scoping evaluation: a mitigative option and a preventive option.

The mitigative option involves crediting plant mitigative features (e.g., pipe whip restraints, jet impingement shields, spray and drip shields, seismic supports, flood barriers) to protect safety-related SSCs from failures of nonsafety-related SSCs. This option requires a demonstration that the mitigating features are adequate to protect safety-related SSCs from failures of nonsafety-related SSCs regardless of failure location. If this level of protection can be demonstrated, then only the mitigative features need be included within the scope of the scope of License Renewal.

The preventive option involves identifying the nonsafety-related SSCs that have a spatial relationship such that their failure could adversely impact on the performance of a safety-related SSC intended function, and including the identified nonsafety-related SSC in the scope of License Renewal without consideration of plant mitigative features.

TMI-1 applied the preventive option for 10 CFR 54.4(a)(2) scoping.

The preventive option as implemented at TMI-1 is based on a “spaces” approach for scoping of nonsafety-related systems with potential spatial interaction with safety-related SSCs. Potential spatial interaction is assumed in any structure that contains active or passive safety-related SSCs. The structures of concern for potential spatial interaction were identified based on a review of the CLB to determine which structures contained active or passive safety-related SSCs. Plant walkdowns were performed as required to confirm that all structures containing safety-related SSCs had been identified.

For structures that contain safety-related SSCs, there may be selected rooms within the structure that do not contain any safety-related SSCs. CLB document reviews and plant walkdowns were utilized as appropriate to confirm that these rooms did not contain safety-related SSCs, thereby eliminating spatial interaction concerns within these rooms.

Nonsafety-related systems and components that contain water, oil, or steam, and are located inside structures that contain safety-related SSCs, are included in scope for potential spatial interaction under criterion 10 CFR 54.4(a)(2), unless located in an excluded room. All high-energy

lines located inside or outside primary containment are included in the scope of License Renewal, under 10 CFR 54.4 (a)(1) or (a)(2), depending on their safety classification. Safety-related high-energy lines are in scope under 10 CFR 54.4 (a)(1), and nonsafety-related high-energy lines are in scope under 10 CFR 54.4 (a)(2). System piping and components containing steam below atmospheric pressure, i.e., under vacuum conditions, do not pose a potential spray hazard and are therefore not included in the scope of License Renewal for potential spatial interaction with safety-related equipment. Supports for all nonsafety-related SSCs within these structures are included in scope.

Air and gas systems (non-liquid) are not a hazard to other plant equipment, and have therefore been determined not to have spatial interactions with safety-related SSCs. TMI-1 and industry operating experience has not identified failures due to aging that have adversely impacted the accomplishment of a safety function. SSCs containing air or gas cannot adversely affect safety-related SSCs due to leakage or spray, since gas systems contain no fluids that could spray or leak onto safety-related systems causing shorts or other malfunctions. Gas systems do not contain sufficient energy to cause pipe whip or jet impingement. Thus the nonsafety-related systems containing air or gas (except portions attached to safety-related SSCs and required for structural support) are not included in the scope of License Renewal for 10 CFR 54.4(a)(2). The supports are included in scope to prevent the nonsafety-related piping from falling down and potentially impacting safety-related SSCs.

The piping systems included in the scope of License Renewal under 10 CFR 54.4(a)(2) for potential spatial interaction with safety-related SSCs are identified on the License Renewal boundary drawings in red.

Mitigative Plant Design Features Used to Exclude SSC's from the Scope of License Renewal

None.

2.1.5.3 Regulated Events – 10 CFR 54.4(a)(3)

In accordance with 10 CFR 54.4(a)(3), the systems, structures and components within the scope of License Renewal include –

> *All systems, structures and components relied on in safety analyses or plant evaluations to perform a function that demonstrates compliance with the Commission's regulations for fire protection (10 CFR 50.48), environmental qualification (10 CFR 50.49), pressurized thermal shock (10 CFR 50.61), anticipated transients without scram (10 CFR 50.62), and station blackout (10 CFR 50.63).*

For each of the five regulations, a technical basis document was prepared to provide input into the scoping process. Each of the regulated event basis documents (described in Section 2.1.3.4) identify the systems and structures that are relied upon to demonstrate compliance with the applicable regulation, and

also point to basis documentation that may be used to determine the scope of components within the system, credited to demonstrate compliance with each of the applicable regulated events. Guidance provided by the technical basis documents was incorporated into the system and structure scoping evaluations, to determine the SSCs credited for each of the regulated events. SSCs credited in the regulated events have been classified as satisfying criteria of 10 CFR 54.4(a)(3) and have been included within the scope of License Renewal.

2.1.5.4 System and Structure Intended Functions

For the systems and structures in the scope of License Renewal, the intended functions that are the bases for including them within the scope of License Renewal are identified and documented in a System and Structure Scoping Report. The system or structure intended functions are based on the applicable CLB reference documents. For systems, the system level intended function descriptions associated with 10 CFR 54.4(a)(1) were standardized based on nuclear safety criteria for pressurized water reactors as documented in industry standard ANSI/ANS-51.1-1983. This provided for consistent function application and appropriate level of detail for system level function descriptions. The component level passive intended functions are those structure and component passive functions that are required to support the system and structure intended functions, and are further described in Section 2.1.6.2, below.

2.1.5.5 Scoping Boundary Determination

Systems and structures that are included in the scope of License Renewal are then further evaluated to determine the population of in scope structures and components. This part of the scoping process is also a transition from the scoping process to the screening process. The process for evaluating mechanical systems is different from the process for structures, primarily because the plant design document formats are different. Mechanical systems are depicted primarily on system flow diagrams that show the system components and their functional relationships, while structures are depicted on physical drawings. Components of electrical systems are screened as commodities. Scoping boundaries for mechanical systems, electrical systems and structures are therefore described separately:

Mechanical Systems

For mechanical systems, the mechanical components that support the system intended functions are included in the scope of License Renewal and are depicted on the applicable system flow diagrams. Mechanical system flow diagrams are marked up to create License Renewal boundary drawings showing the in scope components. Components that are required to support a safety-related function, or a function that demonstrates compliance with one of the License Renewal regulated events, are identified on the system flow diagrams by green highlighting. Nonsafety-related components that are connected to safety-related components and are required to provide structural support at the safety/nonsafety interface, or components whose failure could prevent satisfactory accomplishment of a safety-related function due to spatial interaction with safety-related SSCs, are identified by red highlighting. A computer sort and

download of associated system components from the CRL confirms the scope of components in the system. Plant walkdowns were performed when required for additional confirmation.

Electrical and I&C Systems

Electrical and I&C components within the in scope electrical and I&C systems and electrical and I&C components within the in scope mechanical systems were conservatively included in the scope of License Renewal and did not require further system evaluations to determine which components were required to perform or support identified intended functions and regulated events. The in scope electrical and I&C components were evaluated as commodities during the screening process as described in Section 2.1.6.

Structures

For structures, the structural components that support the intended functions are included in the scope of License Renewal. The structural components are identified from a review of applicable plant design drawings of the structure. Plant walkdowns were performed when required for additional confirmation. A single site plan layout drawing is marked up to create a License Renewal boundary drawing showing the structures in the scope of License Renewal.

2.1.6 SCREENING PROCEDURE

Once the SSCs within the scope of License Renewal have been determined, the next step is to determine which structures and components are subject to an aging management review.

2.1.6.1 Identification of Structures and Components Subject to AMR

The requirement to identify structures and components subject to an aging management review is specified in 10 CFR 54.21(a)(1), which states:

Each application must contain the following information:

(a) An integrated plant assessment (IPA). The IPA must –

(1) For those systems, structures, and components within the scope of this part, as delineated in §54.4, identify and list those structures and components subject to an aging management review. Structures and components subject to an aging management review shall encompass those structures and components—

(i) *That perform an intended function, as described in §54.4, without moving parts or without a change in configuration or properties. These structures and components include, but are not limited to, the reactor vessel, the reactor coolant system pressure boundary, steam generators, the pressurizer, piping, pump casings, valve bodies, the core shroud, component supports, pressure retaining boundaries, heat exchangers, ventilation ducts, the containment,*

the containment liner, electrical and mechanical penetrations, equipment hatches, seismic Category I structures, electrical cables and connections, cable trays, and electrical cabinets, excluding, but not limited to, pumps (except casing), valves (except body), motors, diesel generators, air compressors, snubbers, the control rod drive, ventilation dampers, pressure transmitters, pressure indicators, water level indicators, switchgears, cooling fans, transistors, batteries, breakers, relays, switches, power inverters, circuit boards, battery chargers, and power supplies; and

(ii) That are not subject to replacement based on a qualified life or specified time period.

Structures and components that perform an intended function without moving parts or without a change in configuration or properties are defined as passive for License Renewal. Passive structures and components that are not subject to replacement based on a qualified life or specified time period are defined as long-lived for License Renewal. The screening procedure is the process used to identify the passive, long-lived structures and components in the scope of License Renewal and subject to aging management review.

NUREG-1800, “Standard Review Plan for Review of License Renewal Applications for Nuclear Power Plants” (Reference 1.7.4) and NEI 95-10, Appendix B (Reference 1.7.2), were used as the basis for the identification of passive structures and components. Most passive structures and components are long-lived. In the few cases where a passive component is determined not to be long-lived, such determination is documented in the screening evaluation and, if applicable, on the associated License Renewal boundary drawing.

The TMI-1 structures and components subject to aging management review have been identified in accordance with the requirements of 10 CFR 54.21(a)(1) described above. The process implemented to meet these requirements for mechanical systems, structures and electrical systems and components is described as follows:

Mechanical Systems

The mechanical system screening process began with the results from the scoping process. For in scope mechanical systems, the completed scoping packages include written descriptions and marked up system flow diagrams that clearly identify the in scope system boundary for License Renewal. The marked up system flow diagrams are called boundary drawings for License Renewal. These system boundary drawings were carefully reviewed to identify the passive, long-lived components, and the identified components were then entered into the License Renewal database. Component listings from the CRL were also reviewed to confirm that all system components were considered. In cases where the system flow diagram did not provide sufficient detail, such as for some large vendor supplied components (e.g., compressors, emergency diesel generators), the associated component drawings or vendor manuals were also reviewed. Plant walkdowns were performed when required for confirmation.

Finally, the identified list of passive, long-lived system components was benchmarked against previous License Renewal applications containing a similar system.

Mechanical components are screened with the system in which they were scoped. The only exception involves heat exchangers and coolers, which often involve different system fluids on either side of the heat transfer surface. Heat exchangers and coolers are screened as follows:

1. With the exception of heat exchangers and coolers that are in scope only for 10 CFR 54.4 (a)(2) spatial interactions, the materials, environments and aging effects on both sides of the heat transfer surfaces are evaluated with the system that performs the cooling function. This convention was chosen because the significant aging effects and associated aging management program activities are generally associated with the cooling system side.

2. For heat exchangers and coolers that are in scope for 10 CFR 54.4 (a)(2) only, the portions of the heat exchanger or cooler with the potential for spatial interaction are a function of the design and the process fluid. Therefore, each side of the heat exchanger or cooler is evaluated separately with the system associated with the process environment.

Structures

The structure screening process also began with the results from the scoping process. For in scope structures, the completed scoping packages include written descriptions of the structure. If only selected portions of the structure are in scope, the in scope portions are described in the scoping evaluation. The associated structure drawings were carefully reviewed to identify the passive, long-lived structures and components, and the identified structures and components were then entered into the License Renewal database. Component listings from the CRL were also reviewed to confirm that all structural components were considered. Plant walkdowns were performed when required for confirmation. Finally, the identified list of passive, long-lived structures and components was benchmarked against previous License Renewal applications.

Electrical Commodity Groups

Screening of electrical and I&C components within the in scope electrical, I&C, and mechanical systems used a bounding approach for screening as described in NEI 95-10. Electrical and I&C components for the in scope systems were assigned to commodity groups. The commodity groups subject to an aging management review are identified by applying the criteria of 10 CFR 54.21(a)(1). This method provides the most efficient means for determining the electrical commodity groups subject to an aging management review since many of the electrical components are active.

The sequence of steps and considerations for identification of electrical commodity groups that require an aging management review is as follows:

1. Electrical and I&C components for in scope electrical, I&C, and mechanical systems were identified. The information provided by NEI 95-10 Appendix B,

NUREG-1800 Table 2.1-5, the EPRI License Renewal Electrical Handbook, and the TMI-1 configuration was used as a basis for categorizing electrical and I&C components into commodity groups such as insulated cables and connections, circuit breakers, and switches. Individual components were not identified. The electrical commodity groups identified resulted from a review of plant documents, controlled drawings, the plant equipment database (CRL), and interface with the parallel mechanical screening efforts.

2. Following the identification of the electrical commodity groups, the criteria of 10 CFR 54.21(a)(1)(i) was applied to identify commodity groups that perform their intended functions without moving parts or without a change in configuration or properties (referred to as "passive" components). These electrical commodity groups were identified utilizing the guidance of NEI 95-10 and the EPRI License Renewal Electrical Handbook.

3. Electrical commodity groups that perform no License Renewal intended functions do not require aging management review and were not considered further.

4. The screening criterion found in 10 CFR 54.21(a)(1)(ii) excludes those commodity groups that are subject to replacement based on a qualified life or specific time period from the requirements of an aging management review. The 10 CFR 54.21(a)(1)(ii) screening criterion was applied to those commodity groups that were not previously eliminated by the application of the 10 CFR 54.21(a)(1)(i) screening criterion or previously eliminated because they do not perform a License Renewal intended function. Electrical components/commodities included in the plant environmental qualification (EQ) program are replaced on a specified interval based on a qualified life. Components in the EQ program do not meet the "long-lived" criteria of 10 CFR 54.21(a)(1)(ii) and are "short-lived" per the regulatory definition and are therefore not subject to an aging management review.

5. The remaining commodity groups are evaluated to determine which ones are subject to aging management review, considering industry operating experience and TMI-1 specific configurations.

6. Components which support or interface with electrical components, for example, cable trays, conduits, instrument racks, panels and enclosures, are assessed as civil/structural components in Section 2.4.

The electrical commodities that require an aging management review are individual, passive electrical commodities that are not a part of a larger active assembly. The passive commodity groups that are not subject to replacement based on a qualified life or specified time period are subject to an aging management review. For TMI-1, the electrical commodity groups that require an aging management review are identified in Section 2.5.2.

2.1.6.2 Passive Intended Function Definitions

The intended functions that the components and structures must fulfill are those functions that are the bases for including them within the scope of License

Renewal. A component function is an intended function if it must perform that function for the system to be able to perform the system intended function(s). For example, pressure boundary failure of a component would cause loss of inventory from the system, and the system would subsequently be unable to perform its intended function(s). Structures and components may have multiple intended functions. TMI-1 has considered multiple intended functions where applicable, consistent with the staff guidance provided in Tables 2.1-4(a) and (b) of NUREG-1800, “Standard Review Plan for Review of License Renewal Applications for Nuclear Power Plants” (Reference 1.7.4).

Table 2.1-1 provides expanded definitions of structure and component passive intended functions identified in this application.

Table 2.1-1 Passive Intended Function Definitions

Passive Intended Function	Definition
Absorb Neutrons	Absorb neutrons
Direct Flow	Provide control of the distribution or direction of flow (e.g., spray nozzles, thermal sleeves, surge diffusers) [for Mechanical Applications] Provide spray shield or curbs for directing flow (e.g., safety injection flow to containment sump) [for Structural Applications]
Electrical Continuity	Provide electrical connections to specified sections of an electrical circuit to deliver voltage, current, or signals
Filter	Provide filtration
Fire Barrier	Provide rated fire barrier to confine or retard fire from spreading to or from adjacent areas of the plant
Flood Barrier	Provide flood protection barrier (internal and external flood event)
Heat Sink	Provide heat sink during SBO or design basis accidents
Heat Transfer	Provide heat transfer
HELB Shielding	Provide shielding against high energy line breaks (HELB)
Insulate	Control of heat loss to preclude overheating of nearby safety related SSCs, or prevent freezing of heat traced piping, 10 CFR 54.4 (a)(2).
Insulation - Electrical	Insulate and support an electric conductor

Table 2.1-1 Passive Intended Function Definitions

Passive Intended Function	Definition
Leakage Boundary	Non-safety related component that maintains mechanical and structural integrity to prevent spatial interactions that could cause failure of safety related SSCs. This function includes the required structural support when the non-safety related leakage boundary piping is also attached to safety related piping.
Mechanical Closure	Provide closure of components. Typically used with bolting.
Missile Barrier	Provide missile barrier (internal or external missiles)
Pipe Whip Restraint	Provide pipe whip restraint
Pressure Boundary	Provide pressure-retaining boundary so that sufficient flow at adequate pressure is delivered, or provide fission product barrier for containment pressure boundary, or provide containment isolation for fission product retention, or provide the containment, holdup and plateout function (for Main Steam system)
Shelter, Protection	Provide shelter/protection to safety-related components
Shielding	Provide shielding against radiation
Spray	Convert fluid into spray
Structural Support	Provide structural support for structures and components within the scope for 10 CFR 54.4(a)(1), (a)(2), or (a)(3) or provide structural integrity to preclude non-safety related component interactions that could prevent satisfactory accomplishment of a safety related function.
Structural Support to maintain core configuration and flow distribution	Provide structural support of fuel assemblies, control rods, and incore instrumentation, to maintain core configuration and flow distribution.
Throttle	Provide flow restriction

2.1.6.3 Stored Equipment

Equipment that is stored on site for installation in response to a design basis event is considered to be within the scope of License Renewal. At TMI-1, certain Appendix R fire scenarios utilize stored equipment to facilitate repairs following the fire. The stored equipment credited for Appendix R repairs include cables and connectors, hoses, tubing, fittings, screws, nuts and washers. These components are confirmed available and in good operating condition by periodic surveillance inspections. Tools and supplies used to place the stored equipment in service are not in the scope of License Renewal.

2.1.6.4 Consumables

The evaluation process for consumables is consistent with the guidance provided in NUREG-1800 Table 2.1-3. Consumables have been divided into the following four categories for the purpose of License Renewal: (a) packing, gaskets, component seals, and O-rings; (b) structural sealants; (c) oil, grease, and component filters; and (d) system filters, fire extinguishers, fire hoses, and air packs.

- Group (a) subcomponents (packing, gaskets, seals, and O-rings): Based on ANSI B31.1 and the ASME B&PV Code Section III, the subcomponents of pressure retaining components as shown above are not pressure-retaining parts. Therefore, these subcomponents are not relied on to form a pressure-retaining function and are not subject to an AMR.
- Group (b) structural sealants: AMRs were required for structural sealants in scope structures. A summary of the AMR results is presented in Section 2.4.
- Group (c) subcomponents (oil, grease, and component filters): These components are short lived and are periodically replaced. Various plant procedures are used in the replacement of oil, grease, and filters in components that are in scope for License Renewal.
- Group (d) consumables (system filters, fire extinguishers, fire hoses, and air packs): System Ventilation filters are replaced in accordance with plant procedures based on vendor manufacturers' requirements and system testing. Fire extinguishers, self-contained breathing air packs and fire hoses are within the scope of License Renewal, but are not subject to aging management because they are replaced based on condition. These components are periodically inspected in accordance with National Fire Protection Association (NFPA) standards. These standards require replacement of equipment based on their condition or performance during testing and inspection. The periodic inspections are implemented by controlled TMI-1 procedures. These components are subject to replacement based on NFPA standards implemented by controlled procedures, and are therefore not long-lived and not subject to an aging management review.

2.1.7 GENERIC SAFETY ISSUES

In accordance with the guidance in NEI 95-10 and Appendix A.3 of NUREG-1800, "Standard Review Plan for Review of License Renewal Applications for Nuclear Power Plants, review of NRC generic safety issues (GSIs) as part of the License Renewal process is required to satisfy 10 CFR 54.29. GSIs involving issues related to License Renewal aging management reviews or TLAAs should be addressed in the License Renewal Application. Based on Nuclear Energy Institute (NEI) and NRC guidance, NUREG-0933 Supplement 29 dated November 2005, and previous License Renewal applicants, the following GSIs are addressed for TMI-1 License Renewal:

- GSI 156.6.1, Pipe Break Effects on Systems and Components - This GSI involves assumed high energy line breaks in which the effects of the resulting pipe break prevent the operation of mitigating systems, such as the containment or safety injection systems, that are required to mitigate the effects of the break. The GSI is only indirectly related to aging of piping systems, because the probability of failure of a piping system is affected by degradation, including metal fatigue, that occurs over time. The aspects of pipe breaks that are associated with degradation are addressed in the aging management review tables associated with mechanical systems in Section 3.0 and in the TLAA evaluations of piping components in Section 4.0.
- GSI 163, Multiple Steam Generator Tube Leakage - This GSI involves the potential loss of primary system coolant as a result of leakage through multiple steam generator tubes into an un-isolated steam generator. NRC activities to resolve the issue include continuing development of risk-informed guidance to assure compliance with existing regulatory requirements. The NRC stated that compliance with existing regulatory requirements provides reasonable assurance of plant safety. Steam generator tubes are part of the RCPB and are the subject of an aging management review and TLAA evaluation as documented in Section 3.0 and 4.0. The issue of age-related degradation of steam generator tubes is being addressed within the current licensing basis of the plant and will continue to be addressed within the period of extended operation by the Steam Generator Tube Integrity program discussed in Section B.2.1.8.
- GSI 168, Environmental Qualification of Electrical Equipment – This GSI has been closed by the NRC, as stated in Letter ACRSR-2028 from John T. Larkins, Executive Director of the Advisory Committee on Reactor Safeguards to William D. Travers, Executive Director for Operations, USNRC. EQ is addressed as a TLAA in Section 4.8. Addressed in NEI 95-10 Appendix C.
- GSI 190, Fatigue Evaluation of Metal Components for 60-year Plant Life – This GSI addresses fatigue life of metal components and was closed by the NRC. In the closure letter, however, the NRC concluded that licensees should address the effects of reactor coolant environment on component fatigue life as aging management programs are formulated in support of License Renewal. Accordingly, the issue of environmental effects on component fatigue life is addressed in Section 4.3.
- GSI-191, Assessment of Debris Accumulation on PWR Sump Performance – This GSI addresses the potential for blockage of containment sump strainers that filter debris from cooling water supplied to the safety injection and containment spray pumps following a postulated LOCA. The issue is based

on the identification of new potential sources of debris, including failed containment coatings, that may block the sump strainers. Degradation of coatings inside containment is an issue under the CLB and is being addressed. In a letter from Exelon/AmerGen (P. Cowan) to USNRC, RS-05-116: Exelon/AmerGen Response to NRC Generic Letter 2004-02, "Potential Impact of Debris Blockage on Emergency Recirculation During Design Basis Accidents at Pressurized Water Reactors," dated September 1, 2005, Exelon/AmerGen committed to debris screen modification in accordance with the Generic Letter requirements. Because of this current operating term commitment, AmerGen has included the Protective Coating Monitoring and Maintenance (B.2.1.29) aging management program to manage the aging of the coatings inside containment. TMI-1 does not credit coatings to manage aging of SSCs inside the containment. Also, the issue is not related to the 40-year term of the current operating license; and, therefore, it is not a TLAA.

2.1.8 CONCLUSION

The scoping and screening methodology described above was used for the TMI-1 IPA to identify the systems, structures, and components that are within the scope of License Renewal and require an aging management review. The methodology is consistent with and satisfies the requirements of 10 CFR 54.4 and 10 CFR 54.21(a)(1).

2.2 PLANT LEVEL SCOPING RESULTS

Table 2.2-1 lists the Three Mile Island Unit 1 systems, structures and commodity groups that were evaluated to determine if they were within the scope of license renewal, using the methodology described in Section 2.1. A reference to the section of the application that contains the scoping and screening results is provided for each in-scope system and structure in the Table.

Table 2.2-1 Plant Level Scoping Results

System, Structure or Commodity Group	In Scope?	Comments
Reactor Vessel, Internals, and Reactor Coolant System		
Reactor Coolant System (2.3.1.1)	Yes	
Reactor Vessel (2.3.1.2)	Yes	
Reactor Vessel Internals (2.3.1.3)	Yes	
Steam Generator (2.3.1.4)	Yes	
Engineered Safety Features Systems		
Core Flooding System (2.3.2.1)	Yes	
Decay Heat Removal System (2.3.2.2)	Yes	
Makeup and Purification System (High Pressure Injection) (2.3.2.3)	Yes	
Primary Containment Heating and Ventilation System (2.3.2.4)	Yes	
Reactor Building Spray System (2.3.2.5)	Yes	
Reactor Building Sump and Drain System (2.3.2.6)	Yes	

Table 2.2-1 Plant Level Scoping Results

System, Structure or Commodity Group	In Scope?	Comments
Auxiliary Systems		
Auxiliary and Fuel Handling Building Ventilation System (2.3.3.1)	Yes	
Auxiliary Steam System (2.3.3.2)	Yes	
Chemical Cleaning System	No	
Circulating Water System (2.3.3.3)	Yes	
Closed Cycle Cooling Water System (2.3.3.4)	Yes	
Compressed Gas System	No	
Containment Isolation System (2.3.3.5)	Yes	
Control Building Ventilation System (2.3.3.6)	Yes	
Cranes and Hoists (2.3.3.7)	Yes	
Diesel Generator Building Ventilation System (2.3.3.8)	Yes	
Elevators	No	
Emergency Diesel Generators and Auxiliary Systems (2.3.3.9)	Yes	

Table 2.2-1 Plant Level Scoping Results

System, Structure or Commodity Group	In Scope?	Comments
Fire Protection System (2.3.3.10)	Yes	
Fuel Handling and Fuel Storage System (2.3.3.11)	Yes	
Fuel Oil System (2.3.3.12)	Yes	
Hydrogen Monitoring (2.3.3.13)	Yes	
Instrument and Control Air System (2.3.3.14)	Yes	
Intake Screen and Pump House Ventilation System (2.3.3.15)	Yes	
Intermediate Building Ventilation System (2.3.3.16)	Yes	
Liquid and Gas Sampling System (2.3.3.17)	Yes	
Miscellaneous Floor and Equipment Drains System (2.3.3.18)	Yes	
Miscellaneous HVAC Systems	No	
Open Cycle Cooling Water System (2.3.3.19)	Yes	
Radiation Monitoring System (2.3.3.20)	Yes	
Radwaste System (2.3.3.21)	Yes	

Table 2.2-1 Plant Level Scoping Results

System, Structure or Commodity Group	In Scope?	Comments
Service Building Chilled Water System (2.3.3.22)	Yes	
Sewage and Industrial Waste Treatment System	No	
Spent Fuel Cooling System (2.3.3.23)	Yes	
Station Blackout and UPS Diesel Generator System (2.3.3.24)	Yes	
Water Treatment & Distribution System (2.3.3.25)	Yes	
Steam and Power Conversion Systems		
Condensate System (2.3.4.1)	Yes	
Condensers & Air Removal System (2.3.4.2)	Yes	
Emergency Feedwater System (2.3.4.3)	Yes	
Extraction Steam System (2.3.4.4)	Yes	
Feedwater System (2.3.4.5)	Yes	
Main Generator and Auxiliary Systems (2.3.4.6)	Yes	
Main Steam System (2.3.4.7)	Yes	

Table 2.2-1 Plant Level Scoping Results

System, Structure or Commodity Group	In Scope?	Comments
Steam Turbine and Auxiliary Systems (2.3.4.8)	Yes	
Structures		
Air Intake Structure (2.4.1)	Yes	
Auxiliary Building (2.4.2)	Yes	
Bulk Oil Storage Building	No	This building provides satellite storage and is a distribution point for nonsafety-related lubricating oil. See note 1 for additional information.
Chemical Cleaning Building	No	The equipment in the building is used to support the processing of TMI-1's low level liquid radioactive waste. The tanks inside the building are used to collect, pretreat and store liquid waste from the Auxiliary Building. See note 1 for additional information.
Chemical Storage Building	No	This building provides for the storage of containerized chemicals purchased to support plant operations. See note 1 for additional information.
Circulating Water Biocide House and Weld Facility	No	The building houses (1) a tank for the storage of sulfuric acid, used for the treatment of water in the circulating water system, (2) controls for the injection of biocide into the circulating water system and (3) houses facilities for welding in support of site maintenance. See note 1 for additional information.
Circulating Water Pump House (2.4.3)	Yes	
Classified Waste Storage Building	No	This building is used to collect and classify nonradioactive wastes, collected in the plant, for disposal. See note 1 for additional information.

Table 2.2-1 Plant Level Scoping Results

System, Structure or Commodity Group	In Scope?	Comments
Component Supports Commodity Group (2.4.17)	Yes	
Control Building (2.4.4)	Yes	
Cooling Tower Desilting Basin	No	This basin is located between the natural draft cooling towers. The purpose of the basin is to remove solids from silt ladened water from the draining of the cooling towers during refueling outages. See note 2 for additional information.
Diesel Generator Building (2.4.5)	Yes	
Dike/Flood Control System (2.4.6)	Yes	
Discharge Monitoring Building	No	This building contains water sampling and radiological monitoring equipment for the main site liquid effluent discharge to the river. See note 1 for additional information.
Domestic Water Well House	No	This building contains the domestic water supply wellhead for providing drinking water to the site. See note 1 for additional information.
Dosimetry and Calibration Building	No	These buildings provide for the storage and use of radiological sources used on the site. See note 1 for additional information.
Empty Building	No	This building provides lunchroom facilities. See note 1 for additional information.
Equipment Foundations	No	Equipment Foundations consist of reinforced concrete foundations for the following components: Circ Water Chem Addition Tanks, Demin Water Storage Tank, Fuel Oil Storage Tank, Fuel Oil Tank, Main Transformers, Nitrogen Storage Tank and Tube Rack, Process Water Tanks and Turbine Lube Oil Tank. The purpose of the foundations is to support the associated nonsafety-related equipment. See note 2 for additional information.

Table 2.2-1 Plant Level Scoping Results

System, Structure or Commodity Group	In Scope?	Comments
Fire Brigade Burn Building	No	This building provides building fire fighting practice for fire brigade training. See note 1 for additional information.
Fire Brigade Storage Building	No	This building is used for storage of fire brigade training equipment and is constructed to commercial standards. See note 1 for additional information.
Fire Brigade Training Building	No	This building is used to support fire brigade training. See note 1 for additional information.
Flammable Liquid Storage Facility	No	This building provides for the warehousing of containerized chemicals purchased to support plant operations. See note 1 for additional information.
Fuel Handling Building (2.4.7)	Yes	
Fuel Oil Unloading Station	No	The Fuel Oil Unloading Station provides equipment for transferring fuel oil from tank trucks to the plant storage system. Included are a hose connection and spill containment equipment. See note 2 for additional information.
Hittman Solidification	No	This building contains equipment to support the solidification of liquid radioactive waste and the dewatering of radioactive ion exchange media in preparation for off-site disposal. See note 1 for additional information.
Hydrogen Tank Storage Rack and Foundation	No	This structure provides for storage and support of bulk hydrogen tanks used for main generator cooling. See note 2 for additional information.
Industrial Waste Treatment Building	No	This building contains components used to remove solids and oil and grease from miscellaneous liquid wastes. See note 1 for additional information.
Instrument Calibration Facility	No	This building currently supports the steam generator replacement project. See note 1 for additional information.
Intake Screen and Pump House (2.4.8)	Yes	

Table 2.2-1 Plant Level Scoping Results

System, Structure or Commodity Group	In Scope?	Comments
Interim Solid Waste Staging Facility	No	This building is used to store low level solid radioactive material both for reuse and in preparation for off site disposal. See note 1 for additional information.
Intermediate Building (2.4.9)	Yes	
Maintenance Storage Building	No	This building used for storage of maintenance equipment. See note 1 for additional information.
Maintenance Training Buildings	No	Bldgs 42, 43, 44, These buildings contain maintenance administrative offices, lab and classrooms to support maintenance training programs. See note 1 for additional information.
Mechanical Draft Cooling Tower Structures (2.4.10)	Yes	
Miscellaneous Yard Structures (2.4.11)	Yes	
Natural Draft Cooling Tower (2.4.12)	Yes	
North Bridge	No	The bridge provides the main access point to the site. See note 2 for additional information.
North Office Building	No	This building contains administrative offices for plant personnel. See note 1 for additional information.
Operations Office Building	No	This building contains administrative offices for management and supervisory support of Operations, Chemistry, Radwaste and Radiation Protection. See note 1 for additional information.

Table 2.2-1 Plant Level Scoping Results

System, Structure or Commodity Group	In Scope?	Comments
Operations Support Facility & Well House	No	The Operations Support Facility (OSF) is an office structure for support organizations. It also contains the plant computer and Emergency Planning Technical Support Center. The OSF Well House 1 of 2 domestic water wells. The wellhead also provides a backup source of water for various non-domestic water needs. See note 2 for additional information.
Other Security Structures	No	These structures include the security guard sheds (environmental enclosures). The purpose of these structures is to provide shelter and facilities for the plant security force and equipment required to control access into the protected area which is surrounded by a perimeter security fence, as required by 10CFR Part 73. See note 1 for additional information.
OTSG Storage Building	No	This is future building that will be constructed to commercial standards. The purpose of the building is for storage of the TMI-1's original steam generators and associated large diameter piping following their replacement in 2009. This material will be stored until the site is decommissioned. See note 1 for additional information.
Outage Building	No	This building provides office space for technical and administrative support personnel required to support refueling outages. See note 1 for additional information.
Outage Equipment Storage Building	No	This building is used to store radiologically contaminated tools and other nonsafety-related support equipment to be reused during refueling outages. The building is also used as a personnel staging location for entries into the reactor building during refueling outages. See note 1 for additional information.
Outage Support Fabrication Shop	No	This building is used to fabricate and support refueling outages and modifications. See note 1 for additional information.

Table 2.2-1 Plant Level Scoping Results

System, Structure or Commodity Group	In Scope?	Comments
Outage Tool Storage	No	This building provides for storage of uncontaminated equipment and tools required for refueling outages. See note 1 for additional information.
Paint Storage Building	No	This building provides a storage area for nonsafety-related paint. See note 1 for additional information.
Processed Water Pump House	No	The building contains the pumps used to recirculate and transfer water from the two adjacent tanks to the pump house. The tanks are connected to the TMI-1 liquid radioactive waste system and can be used to store water containing low levels of radioactivity. See note 1 for additional information.
Reactor Building (2.4.14)	Yes	
Respirator & Laundry Facility	No	This building is used for the storage and distribution of protective clothing used in the radiological areas of the plant. See note 1 for additional information.
River Water Intake Biocide House	No	This building contains nonsafety-related tanks, pumps and controls for the addition of biocide to open cycle cooling water. See note 1 for additional information.
SBO Diesel Generator Building (2.4.15)	Yes	
Screen House Desilting Basin	No	The Screen House Desilting Basin removes solids from silt ladened water from the screen house. See note 2 for additional information.
Security Building (Processing Center)	No	This building provides the main security access control point for the power block contains nonsafety-related equipment required to control access into the protected area which is surrounded by a perimeter security fence as required by 10CFR Part 73. The building also provides a single entry and exit point for radiation areas of the plant. See note 1 for additional information.
Service Building (2.4.16)	Yes	

Table 2.2-1 Plant Level Scoping Results

System, Structure or Commodity Group	In Scope?	Comments
Sewage Pumping Station	No	This building houses nonsafety-related equipment which collects and forwards sewage to the sewage treatment plant. See note 1 for additional information.
Sewage Treatment Plant	No	This building contains nonsafety-related treatment equipment for the site's sanitary waste. See note 1 for additional information.
Solid Waste Staging Facility (SWSF)	No	The SWSF consists of concrete cells designed for the storage of radioactive material containers. This facility is used to store containers of radioactive material in preparation for off site disposal. See note 1 for additional information.
South Administration Building	No	This building contains administrative offices for groups providing support services and includes training areas for access control in processing. See note 1 for additional information.
South Bridge	No	This structure provides backup and contractor access to the site. See note 2 for additional information.
Structural Commodities (2.4.13)	Yes	
Substation Emergency Diesel Generator Building	No	This building contains a nonsafety-related emergency diesel generator used to supply control power to the substation. See note 1 for additional information.
Substation Relay House	Yes	
Substation Structures (2.4.18)	Yes	
TMI-2 Structures (Shown as cross hatched areas on the License Renewal Site Plan)	No	These are structures associated with TMI-2 which are not required to support operation of TMI-1. See note 2 for additional information.

Table 2.2-1 Plant Level Scoping Results

System, Structure or Commodity Group	In Scope?	Comments
Training, Simulator, and Visitor Facilities	No	These buildings support the training of plant personnel and visitors. These facilities are located on the east side of state route 441 remote from the
Transportation Building	No	This building is a support facility for vehicles used on site. See note 1 for additional information.
Turbine Building (2.4.19)	Yes	
Unit 2 Intake Screen and Pump House	No	This building is currently used for nonsafety-related equipment storage and personnel training. See note 1 for additional information.
UPS Diesel Building (2.4.20)	Yes	
Utility Department Warehouse	No	This building provides support for maintenance activities. See note 1 for additional information.
Warehouses 1, 2, & 3	No	These buildings provide structural support, shelter, and protection for personnel performing materials receiving and inspection activities and for storage of components, materials, and commodities required for replacement and plant modifications. Warehouse 1 also contains the TMI-1 Emergency Assembly Area which is used as a muster area for site personnel. See note 2 for additional information.
Waste Handling/Packaging Facility	No	This building contains nonsafety-related equipment for the radiological decontamination of tools and equipment. See note 1 for additional information.
Water Pretreatment Building	No	This building provides storage for well water used in the plant. See note 1 for additional information.
Weather Station Service Building and Weather Tower	No	These structures house or provide support for nonsafety-related equipment related to collecting weather information. See note 2 for additional information.

Table 2.2-1 Plant Level Scoping Results

System, Structure or Commodity Group	In Scope?	Comments
Electrical Systems		
120 V Vital Power System (2.5.1.1)	Yes	
250/125 VDC System (2.5.1.2)	Yes	
4160 V Auxiliary System (2.5.1.3)	Yes	
480 V Auxiliary System (2.5.1.4)	Yes	
6900 V Auxiliary System (2.5.1.5)	Yes	
Communication System (2.5.1.6)	Yes	
Digital Turbine Control System (2.5.1.7)	Yes	
Electrical Heat Tracing System (2.5.1.8)	Yes	
Engineered Safeguards Actuation System (ESAS) (2.5.1.9)	Yes	
Heat Sink Protection System (2.5.1.10)	Yes	
Integrated Control System (2.5.1.11)	Yes	
Lighting System (2.5.1.12)	Yes	
Main and Auxiliary Transformers (2.5.1.13)	Yes	

Table 2.2-1 Plant Level Scoping Results

System, Structure or Commodity Group	In Scope?	Comments
Miscellaneous Instrumentation System	No	
Miscellaneous Onsite Electrical Distribution	No	
Non-Nuclear Instrumentation and Monitoring System (2.5.1.14)	Yes	
Nuclear Instrumentation and Incore Monitoring System (2.5.1.15)	Yes	
Reactor Protection and Control Rod Drive System (2.5.1.16)	Yes	
Remote Shutdown Panel (2.5.1.17)	Yes	
Security System	No	
Substation (2.5.1.18)	Yes	

Note 1:

The building(s) are Seismic Class III which requires that the buildings be designed in accordance with the applicable local building code requirements. The purpose of the building(s) is to provide structural support, shelter, and protection for personnel and nonsafety-related equipment contained within. Scoping of the building(s) and equipment contained within determined that it does not perform an intended function delineated in 10 CFR Part 54.4 (a). In addition, failure of the building(s) will not adversely impact any intended functions of other structures, systems or components and it is not relied upon for any regulated event.

Note 2:

The structure(s) are Seismic Class III which requires that the structures be designed in accordance with the applicable local building code requirements. Scoping of the structure(s) determined that they do not perform an intended function delineated in 10 CFR Part 54.4 (a). In addition, failure of the structure(s) will not adversely impact any intended functions of other structures, systems or components and it is not relied upon for any regulated event.

2.3 SCOPING AND SCREENING RESULTS: MECHANICAL

2.3.1 REACTOR VESSEL, INTERNALS, AND REACTOR COOLANT SYSTEM

The following systems are addressed in this section:

- Reactor Coolant System (Section 2.3.1.1)
- Reactor Vessel (Section 2.3.1.2)
- Reactor Vessel Internals (Section 2.3.1.3)
- Steam Generator (Section 2.3.1.4)

2.3.1.1 Reactor Coolant System

System Purpose

The Reactor Coolant System (RCS) is a normally operating system designed to circulate sub-cooled reactor coolant to transfer heat from the Reactor Vessel (RV) core to the secondary fluid in two Once Through Steam Generators (OTSG) during normal operation or anticipated operational occurrences. The system is capable of transferring this heat using forced circulation with the Reactor Coolant Pumps (RCPs) during normal operation or using natural circulation when necessary during emergency operations. The reactor coolant is returned to the RV from each OTSG through dual return lines, each containing a Reactor Coolant Pump (RCP).

The Reactor Coolant System consists of the following plant systems: Reactor Coolant System, Pressurizer, Reactor Coolant Pumps, Reactor Coolant System Pressure Boundary and Pressurizer Heaters. The Reactor Coolant System is in scope for License Renewal. The RCS has interfaces with several other systems and components that are not within the License Renewal boundary of the RCS but are evaluated separately. These include the Reactor Vessel and the OTSGs.

The purpose of the Reactor Coolant System is to circulate reactor coolant either by forced circulation with the Reactor Coolant Pumps or by natural circulation to transfer sufficient heat from the reactor core to the secondary fluid in two OTSGs during normal operation and anticipated operational occurrences so that reactor pressure and core thermal limits are not exceeded. The Reactor Coolant System provides a boundary to separate fission products from the environment. The RCS provides a flow path for High Pressure Injection (HPI) core cooling from the Makeup and Purification System, which is an Engineered Safeguards function. The RCS provides a core cooling flow path for decay heat removal during Cold Shutdown and Refueling conditions. The RCS provides indication of RCS pressure, temperature and flowrate, as well as component status to provide for control of system pressure and inventory. Using the Pressurizer, the RCS establishes and maintains the RCS pressure within prescribed limits and provides a steam surge chamber and a water reserve to accommodate reactor coolant density changes during operation. The system is required for all plant conditions when fuel is in the RV.

System Operation

The Reactor Coolant System is comprised of RCS Hot Leg and Cold Leg piping, the four RCPs, the Pressurizer, the Pressurizer Heaters, the Pressurizer Surge Line and the Pressurizer Spray Line. In addition, portions of interfacing systems that comprise the Reactor Coolant Pressure Boundary are within the scope of the RCS.

Heated reactor coolant exits the RV, passes through the Hot Leg Pipe and on to a OTSG in each heat transfer loop. The coolant passes through the inside of the steam generator tubes, transferring heat to the steam and water on the shell side. For each of the two loops, the reactor coolant continues through two Lower Cold Leg Pipes to the inlet of two RCPs, and through two Upper Cold Leg Pipes from the RCPs back to the RV.

The Pressurizer, along with the Pilot Operated Relief Valve (PORV) and two pressurizer code safety valves, establishes and maintains the RCS pressure within the prescribed limits and provides a steam surge chamber and a water reserve to accommodate reactor coolant density

changes during operation. The Pressurizer Heaters are designed to replace heat lost during normal operation and to raise the pressure to normal operating pressure during RCS heatup. The heaters also function to return system pressure to normal after system transients occur. The Pressurizer Surge Line permits unrestricted flow between the RCS and the Pressurizer to maintain the RCS pressure and accommodate system volume changes. The Pressurizer Spray line provides a path for relatively cool cold leg reactor coolant to spray into the steam space at the top of the Pressurizer to reduce system pressure by condensing steam.

System Boundary

The Reactor Coolant System is comprised of the RCS piping, the four RCPs, the Pressurizer, the Pressurizer Heaters, Pressurizer Surge Line and Pressurizer Spray Line. The RCS includes two identical heat transfer loops connected in parallel to the RV. Each loop provides a flow path for reactor coolant as follows:

· One 36-inch Hot Leg Pipe from each RV outlet nozzle to each OTSG inlet;
· Two 28-inch diameter Cold Leg Pipes from the two outlets in the lower head of each OTSG to the inlet in each of two RCPs;
· Two 28-inch diameter cold leg pipes from the two RCP discharge outlets to the two RV inlet nozzles; and
· Instrumentation.

The Reactor Coolant System scoping boundary begins at the two Reactor Vessel outlet nozzle safe end to pipe welds, includes Hot Leg Pipes “A” and “B”, including flowmeters, and the system continues to the “A” and “B” OTSG Reactor Coolant inlet nozzle safe end to pipe welds. The Reactor Coolant System continues at the two OTSG reactor coolant outlet safe end to pipe welds. From the “A” OTSG, two Lower Cold Leg pipes continue to the “A” and "B" Reactor Coolant Pumps. From the “B” OTSG, two Lower Cold Leg pipes continue to the “C” and "D" Reactor Coolant Pumps. The RCS boundary includes all four Reactor Coolant Pumps and the Upper Cold Leg pipes “A”, “B”, “C” and “D” to the four piping connections to the RCS inlet nozzle safe end welds to the Reactor Vessel. The Pressurizer Surge line that is connected from the Hot Leg “A” to the Pressurizer lower head is included, as well as the Pressurizer Spray line that is connected from the Cold Leg “A” to the Pressurizer.

Not included in the RCS scope are the Reactor Vessel and the “A” and “B” OTSGs, which are evaluated as separate systems. However, the RCS scoping boundary includes the RV Head Vent line, Reactor Coolant Inventory Tracking System line, and the OTSG drain lines out to the second isolation valves.

The RCS scoping boundary includes the Pressurizer, attached piping and safety and relief valves. The Pressurizer contains removable 480 volt AC electric heaters, which are arranged in 13 groups in the bottom section of the Pressurizer. The Pilot Operated Relief Valve (PORV) and two Pressurizer code safety valves are mounted on individual nozzles on the top head of the Pressurizer. The outlets of the code safety valves and Pilot Operated Relief Valve (PORV) are routed through three discharge pipes to a common header to the Reactor Coolant Drain Tank, which is part of the Radwaste System. The outlet piping and common header are included in the scoping boundary of the Reactor Coolant System. In addition, there is a vent line off the top of the Pressurizer that feeds into a common line to the Reactor Coolant Drain Tank. The vent line is included in the scoping boundary of RCS. A nitrogen addition line (part of the Containment Isolation System) is connected to the Pressurizer vent line. The Pressurizer vent line nitrogen isolation valve and the piping downstream are included in the

scope of the RCS. The Pressurizer steam and liquid space sample lines to the first isolation valve are included in the scope of the RCS.

The Reactor Coolant System has two interfaces with the Decay Heat Removal System. The first is where the Decay Heat Removal drop line connects at the normally closed valve off the "B" hot leg. The second interface is where the Decay Heat Removal Spray line connects to the Pressurizer Spray line at the Decay Heat Pressurizer Spray isolation valve.

High point vents are connected to the “A” and “B” hot legs that discharge to the Reactor Coolant Drain Tank, part of the Radwaste System. The RCS scoping boundary extends to include all piping and valves up to and including the isolation valves. A nitrogen addition line (part of the Containment Isolation System) is connected to the hot leg vent. The RCS boundary includes the hot leg nitrogen vent isolation valves and the piping downstream.

The four Lower Cold Leg pipes have drain lines to the Reactor Coolant Drain Pump, which interface with the Radwaste System at the second normally closed valve beyond the connection to the cold legs. The “C” Lower Cold Leg pipe has a drain line that connects to the suction of the Reactor Drain Pump in the Radwaste System. This drain line has a branch line that connects to the letdown coolers in the Makeup and Purification System. Each OTSG has a drain line that connects to the suction of the Reactor Drain Pump (in the Radwaste System).

There are two Reactor Coolant Pumps per loop for a total of four pumps. The pumps are located in the parallel cold leg piping between the bottom of the OTSGs and the Reactor Vessel inlet. During normal operation, seal injection water is supplied from the Makeup and Purification System to the pumps. The RCS Scoping boundary for the seal injection lines is at the first valve upstream of the Reactor Coolant Pump. In addition, there is a #1 seal bypass and seal leakage connection on each Reactor Coolant Pump that discharge to the Makeup and Purification system. The RCS scoping boundaries for the seal bypass and seal leakage lines are at the flange connections adjacent to the pump. The piping beyond the flange is in the scope of the Makeup and Purification System.

There is also a leakoff from the #2 and #3 seals that drain to the Reactor Coolant Drain Tank, which is part of the Radwaste System. The Reactor Coolant Pump Leakoff lines have a loop seal line that runs to the floor drain line to the Reactor Building Sump (part of the Reactor Building Sump and Drain System). The RCS scoping boundary includes all of the piping and valves to the Reactor Building Sump floor drain header. The Reactor Coolant Pump Labyrinth Seal and Thermal Barrier have a supply and return line from the Closed Cycle Cooling Water System that are not included in the scope of the RCS. The Reactor Coolant Pump Motors also have supply and return lines from the Closed Cycle Cooling Water System that are not in the scope of the RCS.

The Makeup and Purification System provides normal makeup and High Pressure Injection through a connection to the Upper Cold Leg pipes. The RCS boundary includes the seal injection throttle valves, the HPI and Makeup containment isolation valves and all the piping and valves downstream.

The Reactor Coolant System scoping boundary also includes the pressure retaining portions of RCS instrumentation and its associated piping, tubing, and instrumentation root valves. Also included in the License Renewal scoping boundary of the RCS are those portions of nonsafety-related piping and equipment that extend beyond the safety-related/nonsafety-related interface up to the location of the first seismic anchor, or to a point no longer in proximity to equipment

performing a safety-related function, whichever extends furthest. This includes the nonsafety-related portions of the systems located within the Reactor Building, shown in red. Included in this boundary are pressure- retaining components relied upon to preserve the leakage boundary intended function of this portion of the system. This includes the Reactor Coolant Pump Lubrication System piping. For more information, refer to the License Renewal Boundary Drawing for identification of this boundary, shown in red.

Not included in the Reactor Coolant System License Renewal scoping boundary are the following interfacing systems, which are separately evaluated as license renewal systems:

Closed Cycle Cooling Water System
Containment Isolation System
Decay Heat Removal System
Liquid and Gas Sampling System
Make-up and Purification System (High Pressure Injection)
Radwaste System
Reactor Building Sump and Drain System
Reactor Vessel
Steam Generator

Reason for Scope Determination

The Reactor Coolant System meets 10 CFR 54.4(a)(1) because it is a safety-related system that is relied upon to remain functional during and following design basis events. It meets 10 CFR 54.4(a)(2) because failure of nonsafety-related portions of the system could prevent satisfactory accomplishment of function(s) identified for 10 CFR 54.4(a)(1). It also meets 10 CFR 54.4(a)(3) because it is relied upon in the safety analyses or plant evaluations to perform a function that demonstrates compliance with the Commission's regulations for Fire Protection (10 CFR 50.48), Environmental Qualification (10 CFR 50.49), Anticipated Transient Without Scram (10 CFR 50.62) and station blackout (10 CFR 50.63). The Reactor Coolant System is not relied upon in any safety analyses or plant evaluations to perform a function that demonstrates compliance with the Commission's regulation for Pressurized Thermal Shock (10 CFR 50.61).

System Intended Functions

1. Provide and maintain sufficient reactor coolant inventory for core cooling. The Reactor Coolant System circulates reactor coolant either by forced circulation with the Reactor Coolant Pumps or by natural circulation to transfer sufficient heat from the reactor core to the steam generator secondary fluid during normal operation and anticipated operational occurrences so that reactor core thermal limits are not exceeded. The Reactor Coolant System provides for core cooling via Pressurizer PORV or safety valves should the heat transfer capability in both steam generators be lost. The Reactor Coolant System provides a path for core cooling via Low Pressure Injection after a LOCA, including a flow path designated for boron precipitation control via the Decay Heat Removal System in a shutdown mode. Provides a heat removal circulation path (core cooling) when utilizing emergency core cooling systems following a LOCA. 10 CFR 54.4(a)(1)
2. Introduce emergency negative reactivity to make the reactor subcritical. The reactor coolant serves as a neutron moderator and reflector and as a solvent for the soluble neutron poison (boron) used in chemical shim reactivity control. 10 CFR 54.4(a)(1)

3. Provide reactor coolant pressure boundary. The Reactor Coolant System forms a barrier against the release of reactor coolant and radioactive material to the reactor building or the Main Steam System. The PORV and code safety valves maintain system pressure to prevent violation of the Core Safety Limit. 10 CFR 54.4(a)(1)
4. Remove residual heat from the Reactor Coolant System. Provides core cooling flow path for normal Decay Heat Removal during Cold Shutdown and Refueling conditions. 10 CFR 54.4(a)(1)
5. Resist nonsafety-related SSC failure that could prevent satisfactory accomplishment of a safety-related function. The Pressurizer Heaters are nonsafety-related components that have the potential for structural interaction with the safety-related Pressurizer. The Reactor Coolant Pump Lube Oil Components are nonsafety-related components which have the potential for spatial interaction with safety-related components. 10 CFR 54.4(a)(2).
6. Relied upon in safety analyses or plant evaluations to perform a function that demonstrates compliance with the commission's regulations for Fire Protection (10 CFR 50.48). The Reactor Coolant System is relied upon to provide reactor coolant pressure control and a heat removal flowpath for hot and cold shutdown. 10 CFR 54.4(a)(3)
7. Relied upon in safety analyses or plant evaluations to perform a function that demonstrates compliance with the commission's regulations for Environmental Qualification (10 CFR 50.49). 10 CFR 54.4(a)(3)
8. Relied upon in safety analyses or plant evaluations to perform a function that demonstrates compliance with the commission's regulations for ATWS (10 CFR 50.62). The Reactor Coolant System pressure transmitters are used to sense Reactor Coolant System pressure. 10 CFR 54.4(a)(3)
9. Relied upon in safety analyses or plant evaluations to perform a function that demonstrates compliance with the commission's regulations for Station Blackout (10 CFR 50.63). The Reactor Coolant System provides a flow path for natural circulation after the Reactor Coolant Pumps have stopped and provides a route of cooling water. 10 CFR 54.4(a)(3)

UFSAR References

4.2.1
4.2.2.3
4.2.2.5
4.2.2.4
4.2.4.4

License Renewal Boundary Drawings

LR-302-650
LR-302-651
LR-302-652
LR-302-640
LR-302-660
LR-302-661
LR-302-690
LR-302-719

Table 2.3.1-1 **Reactor Coolant System**
Components Subject to Aging Management Review

Component Type	Intended Functions
Bolting	Mechanical Closure
Class 1 piping, fittings and branch connections < NPS 4"	Direct Flow (Thermal Sleeve)
Class 1 piping, fittings and branch connections < NPS 4"	Pressure Boundary
Flow Venturi	Pressure Boundary
Flow Venturi	Throttle
Hoses	Leakage Boundary
Piping and fittings	Leakage Boundary
Piping and fittings	Pressure Boundary
Pressurizer	Pressure Boundary
Pressurizer (Integral Support)	Structural Support
Pressurizer (Surge Diffuser)	Direct Flow
Pressurizer instrumentation penetrations, heater sheaths and sleeves, heater bundle diaphragm plate, and manways and flanges	Pressure Boundary
Pressurizer instrumentation penetrations, heater sheaths and sleeves, heater bundle diaphragm plate, and manways and flanges. (Heater Bundle Diaphragm & Instrumentation Nozzle Safe Ends)	Pressure Boundary
Pressurizer instrumentation penetrations, heater sheaths and sleeves, heater bundle diaphragm plate, and manways and flanges. (Heater Sleeve)	Pressure Boundary
Pressurizer instrumentation penetrations, heater sheaths and sleeves, heater bundle diaphragm plate, and manways and flanges. (Lower Heater Bundle Diaphragm)	Pressure Boundary
Pressurizer surge and steam space nozzles, and welds	Direct Flow (Thermal Sleeve)
Pressurizer surge and steam space nozzles, and welds	Pressure Boundary
Pump Casing (RCP Backstop Lube Oil Pump)	Leakage Boundary
Pump Casing (Reactor Coolant Pump)	Pressure Boundary
Reactor Coolant Pressure Boundary Components	Pressure Boundary
Restricting Orifices	Pressure Boundary
Restricting Orifices	Throttle
Tanks (RCP Lube Oil Fill Tanks)	Leakage Boundary
Thermowell	Pressure Boundary

Valve Body	Leakage Boundary
Valve Body	Pressure Boundary

The aging management review results for these components are provided in:

Table 3.1.2-1 Reactor Coolant System
Summary of Aging Management Evaluation

2.3.1.2 Reactor Vessel

System Purpose

The Reactor Vessel system (RV) is a normally operating system designed to contain the pressure and heat in the core and transfer this heat to the reactor coolant. The Reactor Vessel system also includes the Control Rod Drive Mechanisms that provide the ability to control reactivity in the core and the Incore Monitoring System Piping Assembly. The Reactor Vessel consists of the cylindrical vessel shell, lower vessel head, closure head, nozzles and safe ends, closure studs and nuts, Control Rod Drive Mechanisms (CRDM), and the Control Rod Drive Service Structure.

The Reactor Vessel system consists of the following plant systems: Reactor Vessel, Control Rod Drive Mechanisms System, and Reactor Servicing Equipment. The Reactor Vessel system is in scope for License Renewal. The RV has interfaces with several other systems and components that are not within the license renewal boundary of the RV but are evaluated separately. These include the Reactor Coolant System, Reactor Vessel Internals, and the Core Flooding System.

The purpose of the Reactor Vessel system is to maintain the reactor vessel pressure boundary and provide structural support for the reactor vessel internals, core, and control rod drive mechanisms. Primary outlet and inlet nozzles provide for the exit of heated reactor coolant and return to the RV for recirculation through the core. The Reactor Vessel system provides a boundary to separate fission products from the environment. The CRDM provides a means of reactivity control in the reactor by positioning the control rod assemblies. The system is required for plant start-up, normal plant operations and normal shutdown.

System Operation

The Reactor Vessel system is comprised of the Reactor Vessel, including nozzles and safe ends, the Reactor Vessel Head and the Control Rod Drive Mechanisms, the Control Rod Drive Service Structure, the vessel connection to the high point vent and the Reactor Coolant Inventory Trending System, the incore detector closure and piping assemblies, and the Reactor Vessel gasket drain and test connections.

Reactor coolant enters the Reactor Vessel through four primary inlet nozzles, passes through the Reactor Vessel downcomer and up through the core, absorbing heat from the fuel bundles, and then exits the RV through two primary outlet nozzles. The vessel shell material is protected against fast neutron flux and gamma heating effects by the use of a low leakage core design, the downcomer and the thermal shield.

The CRDMs provide a rapid insertion of the control rods into the core by removing power to all CRDMs. Power is removed to the CRDMs when directed by the Reactor Protection System (RPS), Diverse Scram System (DSS), or the manual trip switch. The Control Rod Drive Control System (CRDCS) provide inputs to the CRDMs to alter the position of the control rod assemblies during normal operations. The vent plugs on the CRDM motor tube upper end are used to vent accumulated noncondensible gases trapped within the CRDM housing or upper reactor vessel head during system fill.

System Boundary

The License Renewal scoping boundary of the Reactor Vessel system is comprised of the Reactor Vessel, including nozzles and safe ends, closure studs and nuts, CRDM Housing Assemblies, the CRDM motor tube assemblies, the Control Rod Drive Service Structure, closure insert and hold down bolts, the vessel connection to the high point vent and the Reactor Coolant Inventory Trending System, the incore detector closure and piping assemblies, and the Reactor Vessel gasket drain and test connections. The Reactor Vessel nozzles and safe ends include four reactor coolant inlet nozzles, two reactor coolant outlet nozzles, CRDM nozzles, incore instrumentation nozzles, and two core flooding nozzles with flow restrictors.

Not included in the Reactor Vessel system license renewal scoping boundary are the following interfacing systems, which are separately evaluated as license renewal systems:

Core Flooding System
Nuclear Instrumentation and Incore Monitoring System
Reactor Coolant System
Reactor Vessel Internals

Reason for Scope Determination

The Reactor Vessel system meets 10 CFR 54.4(a)(1) because it is a safety-related system that is relied upon to remain functional during and following design basis events. It does not meet 10 CFR 54.4(a)(2) because failure of nonsafety-related portions of the system could not prevent satisfactory accomplishment of function(s) identified for 10 CFR 54.4(a)(1). It does meet 10 CFR 54.4(a)(3) because it is relied upon in the safety analyses or plant evaluations to perform a function that demonstrates compliance with the Commission's regulations for Fire Protection (10 CFR 50.48), Pressurized Thermal Shock (10 CFR 50.61), ATWS (10 CFR 50.62), and Station Blackout (10 CFR 50.63). The Reactor Vessel system is not relied upon in any safety analyses or plant evaluations to perform a function that demonstrates compliance with the Commission's regulation for Environmental Qualification (10 CFR 50.49).

System Intended Functions

1. Provide reactor coolant pressure boundary. The Reactor Vessel system forms a barrier against the release of reactor coolant and radioactive material to the reactor building. 10 CFR 54.4(a)(1)
2. Maintain reactor core assembly geometry. 10 CFR 54.4(a)(1)
3. Achieve and maintain the reactor core subcritical for any mode of normal operation or event. The CRDM provides automatic and manual means of positioning Control Rod Assemblies in the core. 10 CFR 54.4(a)(1)
4. Introduce emergency negative reactivity to make the reactor subcritical. Following a removal of power to the CRDMs via the Control Rod Drive Control System, the CRDM releases all lead screws permitting the control rods to drop into the core due to the force of gravity. 10 CFR 54.4(a)(1)
5. Provides physical support, shelter, and protection for safety-related systems, structures, and components (SSCs). The Control Rod Drive Service Structure is designed to support control rod drives to assure no loss of function in the event of combined LOCA and maximum hypothetical earthquake. 10 CFR 54.4(a)(1).
6. Relied upon in safety analyses or plant evaluations to perform a function that demonstrates compliance with the commission's regulations for Fire Protection (10 CFR 50.48). The Reactor

Vessel system is relied upon to provide a heat removal flowpath for hot and cold shutdown. 10 CFR 54.4(a)(3)
7. Relied upon in safety analyses or plant evaluations to perform a function that demonstrates compliance with the commission's regulations for ATWS (10 CFR 50.62). The Reactor Vessel system maintains the pressure boundary to assure that specified fuel design limits are not exceeded as a result of anticipated operational occurrences. 10 CFR 54.4(a)(3)
8. Relied upon in safety analyses or plant evaluations to perform a function that demonstrates compliance with the commission's regulations for Station Blackout (10 CFR 50.63). The Reactor Vessel system provides a flow path for natural circulation after the Reactor Coolant Pumps have stopped and provides a route of cooling water. 10 CFR 54.4(a)(3)
9. Relied upon in safety analyses or plant evaluations to perform a function that demonstrates compliance with the Commission's regulations for Pressurized Thermal Shock (10 CFR 50.61). The steel reactor vessel beltline shell, including plates, forgings, and welds was determined to meet the scoping criteria of 10 CFR 54.4 with respect to pressurized thermal shock. 10CFR54.4(a)(3)

UFSAR References

4.2.2.1
3.2.4.3
4.3.3.g

License Renewal Boundary Drawings

LR-302-650

Table 2.3.1-2 **Reactor Vessel**
Components Subject to Aging Management Review

Component Type	Intended Functions
Bolting	Mechanical Closure
Class 1 piping, fittings and branch connections < NPS 4"	Pressure Boundary
Equipment supports and foundations (Control Rod Drive Service Structure)	Structural Support
Flow Venturi	Throttle
Nozzle	Pressure Boundary
Nozzle Safe Ends and Welds	Pressure Boundary
Pressure housings	Pressure Boundary
Reactor Vessel (Closure Head)	Pressure Boundary
Reactor Vessel (Shell and Lower Head)	Pressure Boundary
Reactor Vessel (Support Skirt and attachment welds)	Structural Support
Reactor Vessel (Upper Shell Flange, Nozzle Shell Course)	Pressure Boundary
Valve Body	Pressure Boundary

The aging management review results for these components are provided in:

Table 3.1.2-2 Reactor Vessel
Summary of Aging Management Evaluation

2.3.1.3 Reactor Vessel Internals

System Purpose

The Reactor Vessel Internals system is a normally operating system designed to generate heat in the core and transfer this heat to the reactor coolant. The Reactor Vessel Internals system includes the Fuel Assemblies that generate the heat in the core and the Control Rod Assemblies that control reactivity in the core. The Reactor Vessel Internals consist of two major structural subassemblies that are located within, but are not integrally attached to the Reactor Vessel (RV). The major subassemblies are the Plenum Assembly and the Core Support Assembly. The welds within the scope of the Reactor Vessel Internals system include the major structural welds that form or join the major subassembly cylinders and flanges and minor structural welds joining parts such as lifting lugs, support pipes, and tubes to the major subassemblies.

The Reactor Vessel Internals system is in scope for License Renewal. The Reactor Vessel Internals system has interfaces with two other systems and components that are not within the license renewal boundary of the Reactor Vessel Internals system but are evaluated separately. These are the Reactor Vessel and the Nuclear Instrumentation and Incore Monitoring Systems.

The purpose of the Reactor Vessel Internals system is to maintain reactor core assembly geometry, achieve and maintain the reactor core subcritical for any mode of normal operation or event, control reactivity in the nuclear reactor core, and maintain core thermal and hydraulic limits. The purpose of the Fuel Assemblies is to allow efficient heat transfer from the nuclear fuel to the reactor coolant, maintain structural integrity, and provide a fission product barrier. The purpose of the Control Rod Assemblies is to absorb neutrons in the reactor core to control reactivity. The Plenum Assembly and Core Support Assembly provide support and orientation of the reactor core and provide support, orientation and guidance for the Control Rod Assemblies and the incore instrumentation. The system is required for plant start-up, normal plant operations and normal shutdown.

System Operation

The Reactor Vessel Internals system is comprised of the Plenum Assembly, Core Support Assembly, Thermal Shield, Fuel Assemblies and Control Rod Assemblies.

The Plenum Assembly is a cylindrical assembly with perforated grids on top and bottom that fits inside the core support shield, positions the fuel assemblies and provides the core holddown required for resisting hydraulic lift forces. The Plenum Assembly also provides continuous guidance and protection of the Control Rod Assemblies, supporting the 69 Control Rod Guide Tubes. In addition, the Plenum Assembly directs flow out of the core to the vessel outlet nozzles. The Plenum Assembly is removed every refueling outage to permit access to the Fuel Assemblies.

The Core Support Assembly (CSA) remains in place in the reactor vessel during most refueling operations and is only removed to perform scheduled inspections. The Core Support Assembly is assembled from three separate sub-assemblies that bolt together to form one cylinder. The CSA provides a structure to physically support the reactor core, and a flow boundary to direct coolant flow. The core support shield assembly is the top portion of the

CSA. It is a large cylinder with an upper flange that rests on a circumferential support ledge in the reactor vessel closure flange and supports the entire CSA. The cylinder wall has two nozzle openings for coolant flow that seal to the reactor vessel outlet nozzles by the differential thermal expansion between the stainless steel core support shield and the carbon steel reactor vessel. In addition, eight vent valve mounting rings are welded in the cylinder wall. Internals Vent Valves are installed in the core support shield cylinder wall to equalize pressure between the core and the downcomer following a postulated cold leg pipe rupture. This will permit the core to be flooded and adequately cooled after emergency core coolant has been supplied to the Reactor Vessel. For all normal operating conditions, the vent valves are closed.

The core barrel assembly is a second cylinder bolted to the bottom of the core support shield assembly. The core barrel consists of a flanged cylinder, a series of internal horizontal former plates bolted to the cylinder, and a series of vertical baffle plates bolted to the inner surfaces of the horizontal formers to produce an inner wall enclosing the fuel assemblies. The 177 Fuel Assemblies that make up the core are loaded into the core barrel assembly. Coolant flow is directed downward along the outside of the core barrel cylinder and upward through the fuel assemblies contained in the core barrel.

A cylindrical stainless steel thermal shield is installed in the annulus between the core barrel cylinder and the reactor vessel inner wall. The thermal shield reduces the gamma absorption internal heat generation in the reactor vessel wall, thereby reducing the resulting thermal stresses. The thermal shield is bolted to the Core Barrel Assembly and the Lower Grid Assembly.

The lower internals assembly is bolted to the bottom of the core barrel assembly. The lower internals assembly consists of the lower grid assembly, the flow distributor assembly, and the incore guide tube assemblies. The lower grid assembly is a series of grids and support structures bolted to the bottom of the core barrel to provide structural support to the core. The flow distributor assembly is a set of flow distribution plates located below the lower grid, bowing out into the lower reactor vessel plenum region. The incore guide tube assemblies provide support and protection for the incore monitoring detectors.

The reactor core has 177 Fuel Assemblies arranged in a square lattice to approximate the shape of a cylinder. The reactivity of the core is controlled by 61 extended life Control Rod Assemblies (CRA).

System Boundary

The license renewal scoping boundary of the Reactor Vessel Internals system is comprised of the Plenum Assembly, Core Support Assembly, Thermal Shield, Fuel Assemblies, and Control Rod Assemblies. The Plenum Assembly consists of the Plenum Cover Assembly, Upper Grid Assembly, Control Rod Guide Tube Assemblies, and the Plenum Cylinder Assembly. The Core Support Assembly consists of the Core Support Shield Assembly, Internal Vent Valves, Core Barrel Assembly, Lower Grid Assembly, Flow Distributor Assembly, 52 Incore Instrument Guide Tube Assemblies, Thermal Shield to Core Barrel Bolts, and Thermal Shield to Lower Grid Assembly Bolts. Also included in the Reactor Vessel Internals System are the Fuel Assemblies and the Control Rod Assemblies.

Not included in the Reactor Vessel Internals system license renewal scoping boundary are the following interfacing systems, which are separately evaluated as license renewal systems:

Nuclear Instrumentation and Incore Monitoring System
Reactor Vessel

Reason for Scope Determination

The Reactor Vessel Internals system meets 10 CFR 54.4(a)(1) because it is a safety-related system that is relied upon to remain functional during and following design basis events. It does not meet 10 CFR 54.4(a)(2) because failure of nonsafety-related portions of the system could not prevent satisfactory accomplishment of function(s) identified for 10 CFR 54.4(a)(1). The Reactor Vessel Internals system is not relied upon in any safety analyses or plant evaluations to perform a function that demonstrates compliance with the Commission's regulation for Fire Protection (10 CFR 50.48), Environmental Qualification (10 CFR 50.49), ATWS (10 CFR 50.62), Station Blackout (10 CFR 50.63), or Pressurized Thermal Shock (10 CFR 50.61).

System Intended Functions

1. Maintain reactor core assembly geometry. The Reactor Vessel Internals system maintains core assembly geometry within the reactor to ensure core cooling, core reactivity control, and the integrity of the fuel cladding as a radioactive material barrier. 10 CFR 54.4(a)(1)
2. Achieve and maintain the reactor core subcritical for any mode of normal operation or event. The Control Rod Assemblies adjust the concentration of the neutron absorber in the core. 10 CFR 54.4(a)(1)
3. Introduce emergency negative reactivity to make the reactor subcritical. Following a reactor trip signal, all Control Rod Assemblies are released into the core to initiate a complete reactor trip. 10 CFR 54.4(a)(1)

UFSAR References

3.2.4.1

License Renewal Boundary Drawings

see UFSAR Figure 3.2-44
see UFSAR Figure 3.2-49
see UFSAR Figure 3.2-50

Table 2.3.1-3 **Reactor Vessel Internals**
Components Subject to Aging Management Review

Component Type	Intended Functions
Control Rod Assembly	None - Short Lived
Control rod guide tube assembly; CRGT pipe and flange	Structural Support to maintain core configuration and flow distribution
Control rod guide tube assembly; CRGT rod guide sectors	Structural Support to maintain core configuration and flow distribution
Control rod guide tube assembly; CRGT rod guide tubes	Structural Support to maintain core configuration and flow distribution
Control rod guide tube assembly; CRGT spacer casting	Structural Support to maintain core configuration and flow distribution
Control rod guide tube assembly; CRGT spacer screws	Structural Support to maintain core configuration and flow distribution
Control rod guide tube assembly; Flange-to-upper grid screws	Structural Support to maintain core configuration and flow distribution
Core Barrel Assembly; Baffle/former assembly	Structural Support to maintain core configuration and flow distribution
Core Barrel Assembly; Baffle/former bolts and screws	Structural Support to maintain core configuration and flow distribution
Core Barrel Assembly; Core barrel cylinder (top and bottom flange)	Structural Support to maintain core configuration and flow distribution
Core Barrel Assembly; Core barrel-to-thermal shield bolts	Structural Support to maintain core configuration and flow distribution
Core Barrel Assembly; Lower Internals assembly-to-core barrel bolts	Structural Support to maintain core configuration and flow distribution
Core support shield assembly; Core support shield cylinder (top and bottom flange)	Structural Support to maintain core configuration and flow distribution
Core support shield assembly; Core support shield cylinder (top flange)	Structural Support to maintain core configuration and flow distribution
Core support shield assembly; Core support shield-to-core barrel bolts	Structural Support to maintain core configuration and flow distribution
Core support shield assembly; Outlet and vent valve nozzles	Structural Support to maintain core configuration and flow distribution
Core support shield assembly; Vent valve assembly locking device	Structural Support to maintain core configuration and flow distribution
Core support shield assembly; Vent valve body	Structural Support to maintain core configuration and flow distribution
Core support shield assembly; Vent valve retaining ring	Structural Support to maintain core configuration and flow distribution
Flow distributor assembly; Clamping ring	Structural Support to maintain core configuration and flow distribution
Flow distributor assembly; Flow distributor head and flange	Structural Support to maintain core configuration and flow distribution

Flow distributor assembly; Incore guide support plate	Structural Support to maintain core configuration and flow distribution
Flow distributor assembly; Shell forging-to-flow distributor bolts	Structural Support to maintain core configuration and flow distribution
Fuel Assembly	None - Short Lived
Lower grid assembly; Fuel assembly support pads	Structural Support to maintain core configuration and flow distribution
Lower grid assembly; Guide blocks	Structural Support to maintain core configuration and flow distribution
Lower grid assembly; Guide blocks bolts	Structural Support to maintain core configuration and flow distribution
Lower grid assembly; Incore guide tube spider castings	Structural Support to maintain core configuration and flow distribution
Lower grid assembly; Lower grid and shell forgings	Structural Support to maintain core configuration and flow distribution
Lower grid assembly; Lower grid flow distributor plate	Structural Support to maintain core configuration and flow distribution
Lower grid assembly; Lower grid rib section	Structural Support to maintain core configuration and flow distribution
Lower grid assembly; Lower grid rib-to-shell forging screws	Structural Support to maintain core configuration and flow distribution
Lower grid assembly; Lower internals assembly-to-thermal shield bolts	Structural Support to maintain core configuration and flow distribution
Lower grid assembly; Orifice plugs	Structural Support to maintain core configuration and flow distribution
Lower grid assembly; Shock pads	Structural Support to maintain core configuration and flow distribution
Lower grid assembly; Shock pads bolts	Structural Support to maintain core configuration and flow distribution
Lower grid assembly; Support post pipes	Structural Support to maintain core configuration and flow distribution
Plenum cover and plenum cylinder; Bottom flange-to-upper grid screws	Structural Support to maintain core configuration and flow distribution
Plenum cover and plenum cylinder; Plenum cover assembly	Structural Support to maintain core configuration and flow distribution
Plenum cover and plenum cylinder; Plenum cylinder	Structural Support to maintain core configuration and flow distribution
Plenum cover and plenum cylinder; Reinforcing plates	Structural Support to maintain core configuration and flow distribution
Plenum cover and plenum cylinder; Rib Pads	Structural Support to maintain core configuration and flow distribution
Plenum cover and plenum cylinder; Top flange-to-cover bolts	Structural Support to maintain core configuration and flow distribution
Reactor Vessel Internals; Incore Guide Tube Gussets	Structural Support to maintain core configuration and flow distribution
Reactor Vessel Internals; Incore Guide Tube Nuts	Structural Support to maintain core configuration and flow distribution

Reactor Vessel Internals; Incore Guide Tube Spiders	Structural Support to maintain core configuration and flow distribution
Reactor Vessel Internals; Incore Guide Tubes	Structural Support to maintain core configuration and flow distribution
Thermal Shield	Shielding
Upper grid assembly; Fuel assembly support pads	Structural Support to maintain core configuration and flow distribution
Upper grid assembly; Rib-to-ring screws	Structural Support to maintain core configuration and flow distribution
Upper grid assembly; Upper grid rib section	Structural Support to maintain core configuration and flow distribution
Upper grid assembly; Upper grid ring forging	Structural Support to maintain core configuration and flow distribution

The aging management review results for these components are provided in:

Table 3.1.2-3 Reactor Vessel Internals
Summary of Aging Management Evaluation

2.3.1.4 Steam Generator

System Purpose

The Steam Generator system is a normally-operating system, consisting of two Once Through Steam Generators (OTSGs), designed to serve as a heat sink for the reactor coolant, to supply superheated steam to the turbine/generator, and to provide a barrier to prevent fission products and activated corrosion products in the reactor coolant from entering the steam system. Each OTSG is a vertical, straight-tube and shell single pass heat exchanger. Reactor coolant flows downward through the steam generator tubes, transfers heat to the secondary fluid, and exits through two outlet nozzles in the lower head. The high-pressure (reactor coolant pressure) components of the steam generators include the hemispherical heads, the tube sheets (integral with the heads), and the tubes.

Secondary fluid (Main Feedwater) enters through a ring of nozzles that penetrate the steam generator shell a little above the midpoint. The nozzles spray the feedwater downward through an annulus between the lower shroud and the shell, and near the lower tubesheet, it turns inward and then flows upward around the tubes and through the tube support plates. As the feedwater absorbs heat from the primary coolant, it first boils and then becomes superheated. The dry steam flows down through an annulus between the upper baffle and the shell, and exits the OTSG through two steam outlet nozzles just above the feedwater inlet ports. The steam-producing section of the OTSG is comprised of the shell, the outside of the tubes, and the tube sheets.

Each OTSG has Emergency Feedwater nozzles that discharge water from the Emergency Feedwater System through the upper shroud into the tubed region of the steam generators. Emergency Feedwater is a standby system designed to remove heat from the primary system when the normal feedwater supply is not available.

TMI-1 will replace the original OTSGs with enhanced OTSGs prior to the period of extended operation. This decision was made based on industry and TMI-1 experience with tube degradation. The new OTSGs have improved design features including Alloy 690 tubes. The new OTSGs will have a design life of forty years. The components in Table 2.3.1-4 are for the new OTSGs and the aging management review was performed for the new OTSGs.

System Operation

The heat energy generated in the Reactor Vessel core is transferred via reactor coolant to the secondary side of the OTSG, where steam is generated and then transported to the turbine/generator for conversion to electrical power. The secondary side of the OTSG provides for decay heat removal from the Reactor Coolant System normal startup and shutdown conditions, when the Decay Heat Removal System is not in service. The secondary side of the OTSG also provides an intermediate system boundary between the Reactor Coolant System coolant and the turbine generator and condenser.

On the primary side of the OTSG, the reactor coolant enters through the reactor coolant inlet nozzle, passes through the upper tubesheet into the main portion of the steam generator, flows down the tubes, where heat is transferred to the feedwater on the shell side. The reactor coolant in the tubes passes through the lower tubesheet and leaves the OTSG through the two reactor coolant outlet nozzles.

On the secondary side of the OTSG, the feedwater enters through nozzles located just above the midpoint of the shell. Feedwater is sprayed into a downcomer annulus between the shell and the cylindrical baffle that surrounds the tube bundle. The downcomer water flows downward, then passes through ports at the bottom of the baffle, where it enters the tube bundle, and reverses direction upward. Steam is generated as the water flows upward in the tube bundle. In the uppermost region of the tube bundle, the steam is superheated. Then the steam reverses direction again, flows downward through the steam annulus and exits through the two steam outlet nozzles.

In addition, approximately 10% of the steam flow that passes through the tube bundles is bled off from the tube bundle to the downcomer annulus. This steam heats the incoming feedwater to saturation temperature. Therefore, the total tube bundle flow up to the bleed point in the downcomer annulus is approximately 110% of the steam flow that leaves the steam generator.

System Boundary

The Steam Generator System License Renewal Scoping Boundary includes those portions of both Once Through Steam Generators (OTSGs) associated with maintaining the Reactor Coolant pressure boundary and the secondary side pressure boundary. This includes the tubes, tubesheets, and cylindrical vessel with heads. The Steam Generator System interfaces with the Reactor Coolant System at the Reactor Coolant Inlet Nozzle safe end-to-pipe weld, one for each OTSG, and at the Reactor Coolant Outlet Nozzle safe end-to-pipe welds, two for each OTSG. The Steam Generator System interfaces with the Feedwater System at the thirty-two riser pipe elbow-to-nozzle welds for each OTSG. The Steam Generator System interfaces with the Emergency Feedwater System at the seven riser pipe elbow-to-nozzle welds for each OTSG. The Steam Generator System interfaces with the Main Steam System at the nozzle safe end-to-pipe welds, two for each OTSG. Each of the safe end-to-pipe welds are within the scope of the interfacing system. The Steam Generator Drains, Sampling and Instrument lines are not included in the scope of the Steam Generator System.

Not included in the Steam Generator System License Renewal scoping boundary are the following interfacing systems, which are separately evaluated as License Renewal systems:

Emergency Feedwater System
Feedwater System
Liquid and Gas Sampling System
Main Steam System
Reactor Coolant System

Reason for Scope Determination

The Steam Generator System meets 10 CFR 54.4(a)(1) because it is a safety-related system that is relied upon to remain functional during and following design basis events. It does not meet 10 CFR 54.4(a)(2) because failure of nonsafety-related portions of the system could not prevent satisfactory accomplishment of function(s) identified for 10 CFR 54.4(a)(1). It does meet 10 CFR 54.4(a)(3) because it is relied upon in the safety analyses or plant evaluations to perform a function that demonstrates compliance with the Commission's regulations for Fire Protection (10 CFR 50.48) and Station Blackout (10 CFR 50.63). The Steam Generator System is not relied upon in any safety analyses or plant evaluations to perform a function that

demonstrates compliance with the Commission's regulation for Environmental Qualification (10 CFR 50.49), ATWS (10 CFR 50.62), or Pressurized Thermal Shock (10 CFR 50.61).

System Intended Functions

1. Provide reactor coolant pressure boundary. The Once Through Steam Generators have components that directly form the Reactor Coolant pressure boundary (Tubes and Tubesheets) and those that provide Reactor Coolant pressure boundary support to maintain the pressure boundary integrity (skirt and Steam Generator internals that support the tubes). 10 CFR 54.4(a)(1)
2. Provide secondary heat sink. The Emergency Feedwater System provides an alternate source of feedwater to the Once Through Steam Generators, removing heat (including Reactor Coolant pump energy, decay and sensible heat) from the Reactor Coolant System to allow safe shutdown of the reactor for events where the main Feedwater System is unavailable, including station blackout. 10 CFR 54.4(a)(1)
3. Relied upon in safety analyses or plant evaluations to perform a function that demonstrates compliance with the Commission's regulations for Fire Protection (10 CFR 50.48).
4. Relied upon in safety analyses or plant evaluations to perform a function that demonstrates compliance with the Commission's regulations for Station Blackout (10 CFR 50.63).

UFSAR References

4.2.2.2

License Renewal Boundary Drawings

LR-302-032
LR-302-650

Table 2.3.1-4 **Steam Generator**
Components Subject to Aging Management Review

Component Type	Intended Functions
Bolting	Mechanical Closure
Flow Venturi - Steam Outlet Nozzle Flow Restrictor	Throttle
Spray Nozzles - Main Feedwater	Direct Flow
Steam Generators - EFW Inlet Piping	Pressure Boundary
Steam Generators - Intermediate Shell, Lower Shell	Pressure Boundary
Steam Generators - Level Sensing and Drain Connections	Pressure Boundary
Steam Generators - Main Steam Nozzle Safe Ends	Pressure Boundary
Steam Generators - MFW and EFW Nozzle	Pressure Boundary
Steam Generators - MFW and EFW Nozzle Reducer	Direct Flow
Steam Generators - Primary Manway Cover, Primary Inspection Port Cover	Pressure Boundary
Steam Generators - Secondary Manway Cover, Secondary Hand Hole Cover	Pressure Boundary
Steam Generators - Tube Support Plate	Structural Support
Steam Generators - Tubes	Pressure Boundary
Steam Generators - Upper and Lower Head, RCS Inlet Nozzle, RCS Outlet Nozzle	Pressure Boundary
Steam Generators - Upper and Lower Tubesheets	Pressure Boundary
Steam Generators - Upper Shell, Nozzle Shell, Main Steam Nozzle	Pressure Boundary

The aging management review results for these components are provided in:

Table 3.1.2-4 Steam Generator
Summary of Aging Management Evaluation

2.3.2 ENGINEERED SAFETY FEATURES SYSTEMS

The following systems are addressed in this section:

- Core Flooding System (Section 2.3.2.1)
- Decay Heat Removal System (Section 2.3.2.2)
- Makeup and Purification System (High Pressure Injection) (Section 2.3.2.3)
- Primary Containment Heating and Ventilation System (Section 2.3.2.4)
- Reactor Building Spray System (Section 2.3.2.5)
- Reactor Building Sump and Drain System (Section 2.3.2.6)

2.3.2.1 Core Flooding System

System Purpose

The Core Flooding System is a passive, mechanical, standby, ECCS system designed to automatically flood the core during intermediate and large Reactor Coolant System (RCS) pipe failures. The Core Flooding System consists of the following plant systems: Core Flooding subsystem and the Decay Heat & Core Flooding Check Valve Testing subsystem. The Core Flooding System is in scope for License Renewal. The Core Flooding System has several interfaces with other systems that are not in the License Renewal Boundary of the Core Flooding System.

The purpose of the Core Flooding System is to automatically flood the core during intermediate and large RCS pipe failures. The Core Flooding System accomplishes this purpose by automatically discharging borated water from the two Core Flooding tanks directly to the Reactor Vessel when the RCS pressure drops below 600 psig. The driving force to inject the stored borated water into the Reactor Vessel is supplied by pressurized nitrogen, which occupies approximately one third of the Core Flooding tank volume. The combined coolant in the two Core Flooding tanks is sufficient to re-cover the core hot spot, assuming no liquid remains in the Reactor Vessel following the intermediate or large pipe break LOCA.

During power operation when the RCS pressure is higher than the Core Flooding System pressure, the two check valves between the Flooding nozzles and the Core Flooding tanks prevent high pressure reactor coolant from entering the Core Flooding tanks. Connections are provided for adding both borated water and nitrogen during power operation so that proper volume and pressure may be maintained.

System Operation

The Core Flooding System consists of two tanks charged with nitrogen, and associated piping, valves, instrumentation, and controls. The two core flood tanks are each filled with a combination of borated water for approximately two thirds of the volume and the remainder of the tank filled with nitrogen charged to 600 psig. The nitrogen provides the driving force for injecting the borated water into the Reactor Vessel.

Under normal operation, the only required operations are those necessary to maintain tank level, pressure, temperature and boron concentration within specifications. These operations are accomplished via the connections with the Makeup and Purification System, Containment Isolation System, which includes Nuclear Plant Nitrogen Supply, and Liquid and Gas Sampling System.

During plant transients when the RCS pressure drops to below that of the Core Flooding tanks, the Core Flooding system check valves, between the tanks and the Reactor Vessel, open allowing borated water to flow to the Reactor Vessel. The system is passive and there is no redundancy in this system. Both loops are required to re-cover the core in the event of a LOCA.

The Decay Heat and Core Flooding Check Valve Testing subsystem is also a part of the Core Flooding System. This system has no function during normal operation. During plant shutdown the function of the Decay Heat and Core Flooding Check Valve Testing subsystem is to test valves for leakage. After completion of leakage testing, the system is drained and piping

connections to the Core Flooding System are removed. Because the Decay Heat and Core Flooding Check Valve Testing subsystem is isolated during normal operations, this portion of the Core Flooding System is not in the scope of License Renewal.

For more detailed information, see UFSAR Section 6.1.2.1c.

System Boundary

The Core Flooding System consists of an “A” and “B” Loop. Each loop begins with the Core Flooding tank, which is charged with nitrogen at 600 psig. Each Core Flooding Tank discharges borated water through an open motor operated valve and two check valves directly to the reactor vessel. There is a connection to the Decay Heat Removal System between the Core Flooding check valves in both Core Flooding loops. The Decay Heat Removal System is capable of providing coolant directly to the Reactor Vessel.

A header exists between the two Core Flooding Tanks. On the upstream side of this header there are interfaces with other systems that provide functional support during normal operations. The Make-up & Purification System provides make-up water and chemical addition to maintain normal tank operating levels and to maintain the required boron concentration in the Core Flooding Tanks. The Containment Isolation System provides the nitrogen supply when recharging of the Core Flooding Tanks is required. There is a manual globe valve and a check valve that isolate the Core Flooding System from the Containment Isolation System except during recharging operations.

There are drain lines on the Core Flooding Tanks that provide piping interfaces with two other systems. The Liquid and Gas Sampling System interface provides the ability to sample water in the Core Flooding Tanks. The Radwaste System interface provides the ability to relieve pressure and to lower tank level in the Core Flooding Tanks.

All associated piping components and instrumentation contained within the flow path described above is included in the system evaluation boundary.

Also included in the license renewal scoping boundary of the Core Flooding System are those portions of nonsafety-related piping and equipment that extend beyond the safety-related/nonsafety-related interface up to the location of the first seismic anchor, or to a point no longer in proximity to equipment performing a safety-related function, whichever extends furthest. This includes the nonsafety-related portions of the system located within the Reactor Building and the Auxiliary Building. Included in this boundary are pressure retaining components relied upon to preserve the leakage boundary intended function of this portion of the system. For more information, refer to the License Renewal Boundary Drawing for identification of this boundary, shown in red.

Not included in the Core Flooding System license renewal scoping boundary are the following systems, which are separately evaluated as license renewal systems:

Reactor Vessel System
Reactor Coolant System
Containment Isolation System
Makeup and Purification System
Liquid and Gas Sampling System
Decay Heat Removal System

Radwaste Systems

Reason for Scope Determination

The Core Flooding System meets 10 CFR 54.4(a)(1) because it is a safety related system that is relied upon to remain functional during and following design basis events. It meets 10 CFR 54.4(a)(2) because failure of non-safety related portions of the system could prevent satisfactory accomplishment of function(s) identified for 10 CFR 54.4(a)(1). It meets 10 CFR 54.4(a)(3) because it is relied upon in the safety analyses or plant evaluations to perform a function that demonstrates compliance with the Commission's regulations for Environmental Qualification (10 CFR 50.49) and Station Blackout (10 CFR 50.63). The Core Flooding System is not relied upon in any safety analyses or plant evaluations to perform a function that demonstrates compliance with the Commission's regulations for Fire Protection (10 CFR 50.48), Pressurized Thermal Shock (PTS) (10CFR 50.61), and Anticipated Transient Without Scram (ATWS) (10 CFR 50.62).

System Intended Functions

1. Provide Reactor Coolant pressure boundary. The pressure integrity of the Core Flooding System is required to provide the Reactor Coolant pressure boundary. Two check valves on each of the Core Flooding loops protect the pressure boundary. 10 CFR 54.4(a)(1)
2. Achieve and maintain the reactor core subcritical for any mode of normal operation or event. The Core Flooding System is an ECCS system that injects chemical neutron absorber into the Reactor Vessel when RCS pressure is below the pressure in the Core Flooding tank. 10 CFR 54.4(a)(1)
3. Provide and maintain sufficient reactor coolant inventory for core cooling. The Core Flooding System provides additional water volume to the reactor core in the event of a LOCA using water stored in the Core Flooding Tanks. The flow of water is automatically initiated when the pressure in the reactor vessel drops below the pressure in the Core Flooding Tanks. 10 CFR 54.4(a)(1)
4.Introduce negative reactivity. The Core Flood System provides additional water volume to the reactor core in the event of a LOCA using water stored in the Core Flooding Tanks. 10 CFR 54.4(a)(1).
5. Provide primary containment boundary. The Core Flooding System includes Reactor Building isolation valves to assure that radioactive material is not inadvertently transferred out of the Reactor Building. 10 CFR 54.4(a)(1)
6. Resist non-safety related SSC failure that could prevent satisfactory accomplishment of a safety related function. The Core Flooding System contains non-safety related water or steam filled lines in the Auxiliary Building and in the Reactor Building which have the potential for spatial interactions (spray or leakage) with safety related SSCs. 10CFR54.4(a)(2)
7. Relied upon in safety analyses or plant evaluations to perform a function that demonstrates compliance with the commission's regulations for Environmental Qualification (10 CFR 50.49). 10CFR54.4(a)(3)

UFSAR References

4.2.5.2
4.2.5.3
6.1.2.1c
9.1.1

License Renewal Boundary Drawings

LR-302-640
LR-302-690
LR-302-694
LR-302-670
LR-302-661
LR-302-711
LR-302-720

Table 2.3.2-1 **Core Flooding System**
Components Subject to Aging Management Review

Component Type	Intended Functions
Bolting	Mechanical Closure
Class 1 piping, fittings and branch connections < NPS 4"	Leakage Boundary
Class 1 piping, fittings and branch connections < NPS 4"	Pressure Boundary
Flow Element	Pressure Boundary
Piping and fittings	Leakage Boundary
Piping and fittings	Pressure Boundary
Tanks (Core Flooding Tanks)	Pressure Boundary
Valve Body	Pressure Boundary

The aging management review results for these components are provided in:

Table 3.2.2-1 Core Flooding System
Summary of Aging Management Evaluation

2.3.2.2 Decay Heat Removal System

System Purpose

The Decay Heat Removal system is designed to remove decay heat from the core and residual heat from the Reactor Coolant System during the latter stages of cooldown. The system also provides auxiliary spray to the pressurizer for complete depressurization, maintains the reactor coolant temperature during refueling, and provides a means for filling and draining the fuel transfer canal. In the event of a LOCA, the system injects borated water into the reactor vessel for long-term emergency cooling, and is used for post-LOCA boron precipitation prevention. The system is designed to maintain core cooling for larger break sizes by providing low pressure injection independent of and in addition to the high pressure injection provided by the Makeup and Purification System.

The Decay Heat Removal System has multiple purposes:

To inject borated water into the core following a LOCA for long-term emergency cooling: It accomplishes this purpose by taking suction from the Borated Water Storage Tank (BWST) and injecting to the reactor vessel via the Core Flooding System when Reactor Coolant System pressure decreases below pump discharge pressure. When the BWST inventory is reduced to minimum level, suction is transferred to the Reactor Building Sump. In the event reactor pressure remains higher than the shutoff head of the Decay Heat Removal pumps when the BWST level is below the minimum level required for adequate NPSH, the Decay Heat Removal system can be aligned to transfer water from the reactor building sump to the suction of the Makeup and Purification System (high-pressure injection) pumps to support that system's continued high pressure injection.

To prevent boron precipitation post-LOCA: It accomplishes this purpose by providing an auxiliary spray flow to the pressurizer, and dropline flow from the "B" reactor coolant hot leg. This establishes both active means of boron precipitation prevention.

To remove decay heat from the core and residual heat from the Reactor Coolant System during shutdown: It accomplishes this purpose by drawing water from the Loop "B" Hot Leg and pumping it through one of the two Decay Heat Removal Cooler loops and back to the reactor vessel via the Core Flooding System. The suction isolation valves from the Reactor Coolant System are interlocked to not open when reactor coolant pressure is greater than 400 psig. The Decay Heat Removal System can also be aligned for chemical addition or cleanup while operating in the decay heat removal mode.

To provide auxiliary spray to the pressurizer for final stages of cooldown: It accomplishes this purpose by providing a flow path to the pressurizer via the Reactor Coolant System from the outlet side of the Loop "A" Decay Heat Removal Cooler. Either loop can supply this line though use of the cross-tie piping.

To maintain the reactor coolant temperature at a suitable level for refueling: It accomplishes this purpose by removing heat from the reactor coolant, normally using one of two Decay Heat Removal System pump and heat exchanger trains to maintain reactor coolant temperature below 140 degrees F.

To provide an alternate means for filling and draining the fuel transfer canal (normally

performed by the Spent Fuel Cooling System): The Decay Heat Removal System can accomplish filling of the canal above the level of the reactor vessel flange by aligning suction of one decay pump to the borated water storage tank. After refueling, the Decay Heat Removal System can accomplish draining of the fuel transfer canal to the level of the reactor vessel flange by aligning the discharge of one of the pumps from the reactor injection nozzle to the borated water storage tank. During this operation, the remaining pump continues in recirculation mode of decay heat removal.

During normal plant power operation, the Decay Heat Removal System is aligned for operation in the Low Pressure Injection mode and is initiated automatically on an Engineered Safety (ES) signal of Reactor Coolant System pressure decrease to 1600 psig, or 500 psig (as a backup signal), or reactor building pressure increase to 4 psig. The other modes of Decay Heat Removal System operation are aligned and actuated manually.

The Decay Heat Removal System is designed so that a single failure will not result in the loss of the Decay Heat Removal System capability during a LOCA or loss of offsite power. In the event that the need for emergency core cooling should occur, operation of one makeup pump, one decay heat removal pump, and both Core Flooding Tanks (part of the Core Flooding System) will protect the core. Both Core Flooding Tanks are required for the Core Flooding System to re-flood the core for the full spectrum of intermediate-break and large-break LOCAs.

System Operation

The Decay Heat Removal System is comprised of two Decay Heat Removal Pumps independently powered from diverse sources, two Decay Heat Removal Coolers, and the associated piping, valves, instrumentation, and controls.

During normal plant operation, the Decay Heat Removal System is in standby, aligned to perform the Low Pressure Injection ES function. The system will actuate on an ES signal of Reactor Coolant System pressure decrease to 1600 psig or 500 psig, if ES is not bypassed, or reactor building pressure increase to 4 psig. The Decay Heat Removal System will perform cooling by injection through Core Flooding System piping when Reactor Coolant System pressure decreases below pump discharge pressure. Once the system is actuated, the flow path for this mode is from the BWST through the Decay Heat Removal Pumps and Decay Heat Removal Coolers, through the injection valves and into the Reactor Coolant System via the Core Flooding System. Until the Reactor Coolant System pressure decreases below pump discharge pressure, the Decay Heat Removal pumps recirculate to their suction. When the BWST level reaches the minimum level, suction is manually aligned to the Reactor Building Sump, permitting recirculation and cooling of the reactor coolant and injection water from the LOCA break.

After a small break LOCA, the reactor pressure may remain above the shutoff head of the Decay Heat Removal Pumps even when the BWST inventory has been reduced to minimum NPSH level. In this event, the Decay Heat Removal System can be aligned to provide flow from the Reactor Building Sump to the suction of the high pressure Makeup and Purification System pumps, to allow continued high pressure injection.

Following a LOCA, where Reactor Coolant System water level is not known, a forced circulation flowpath through the core barrel region is established to prevent boron precipitation. With low pressure injection mode established, a spray flow path to the pressurizer is enabled. When Reactor Coolant System pressure is in equilibrium with the reactor building pressure, a

dropline flow path from the Loop “B” hot leg is established. This enables both of the active means of boron precipitation prevention.

The Decay Heat Removal mode of operation is manually aligned and initiated. The system is designed to operate two pumps and two coolers to perform the decay heat cooling function. A single Decay Heat Removal loop is normally used to cooldown the reactor coolant system and maintain reactor coolant temperature at cold shutdown or refueling conditions. During plant cooldown, when reactor coolant temperature and pressure are in the range allowable for operation of the Decay Heat Removal System, system start-up is initiated. Decay heat cooling is initiated by aligning pumps to take suction from the reactor outlet line and discharge through the coolers back into the reactor vessel via the core flooding nozzles.

During refueling, the decay heat from the reactor core is rejected to the decay heat removal coolers in the same manner as it is during cooldown to 140°F. At the beginning of the refueling period, the system is designed so that both coolers and both pumps can be used to maintain 140°F in the core and fuel transfer canal. However, experience has shown that one cooler and pump can maintain the required 140°F.

In the Decay Heat Removal mode, flow to the pressurizer spray piping can be controlled through the pressurizer isolation valve in the Reactor Coolant System. The pressurizer spray flow line is located on the “A” loop of Decay Heat Removal, but the “B” loop equipment can be used for pressurizer spray by opening the loop cross connect valves.

The fuel transfer canal is normally filled and drained by the Spent Fuel Cooling System. However, it may also be filled above the reactor vessel flange by manually aligning the suction of one decay heat removal pump from the reactor outlet to the borated water storage tank. When the transfer canal is filled, suction to that pump can be aligned back to the reactor outlet pipe.

After refueling, the transfer canal may be drained to the reactor vessel flange level by manually aligning the discharge of one of the pumps from the reactor injection nozzle to the BWST. The other Decay Heat Removal Pump may continue the recirculation mode of decay heat removal.

The Decay Heat Removal Pumps are single stage centrifugal pumps with a design flow of 3000 gpm at 150 psi. The pumps are fitted with mechanical seals, and the bearings are oil lubricated. The pump motors are powered from the 1D and 1E 4160 volt ES busses. The motors are water cooled by the Decay Heat Closed Cooling System.

The Decay Heat Removal Coolers are shell and tube type heat exchangers with Decay Heat Removal process water on the tube side and Decay Heat Closed Cooling Water on the shell side. They have a design flowrate of 3000 gpm on both the shell and tube sides, and a heat removal capacity of 29.65 E6 BTU/hr.

The BWST has a usable capacity of 350,000 gallons at a temperature of up to 120 deg. F.

For more detailed information, see UFSAR sections 1.2.5, 6.1.2, and 9.5.

System Boundary

The Low Pressure Injection mode of the Decay Heat Removal System scoping boundary begins with the BWST. The single tank discharge line divides into two, supplying the “A” and

"B" Decay Heat Removal Loops, and continues to the suction of each of the two Decay Heat Removal Pumps. The suction header of each Decay Heat Removal Pump also interfaces with the Reactor Building Sump & Drain System, for aligning the pump suction to the sump for long term injection into the reactor following a LOCA. Each pump discharges through a Decay Heat Removal Cooler, through a flow element, and continues through a discharge valve to a check valve, which constitutes the interface with the Core Flooding System, through which the flowpath enters the reactor. Included in this boundary are minimum flow recirculation lines on each decay heat loop, which connects the piping downstream of each Decay Heat Removal Cooler with its associated Decay Heat Removal Pump suction line, and a cross tie line between the loops, located downstream of the Decay Heat Removal Coolers. Downstream of each Decay Heat Removal Cooler, a valved connection with the Makeup and Purification System's high-pressure makeup pumps suction lines allow for a long-term supply of water from the reactor building sump through the Decay Heat Removal Pumps to the high pressure makeup pumps.

The Decay Heat Removal mode of operation flowpath includes a line from the Reactor Coolant System Loop "B" Hot Leg, through valves interlocked to not open above 400 psig, to the suction piping of each of the Decay Heat Removal Pumps. The Decay Heat Removal System reactor coolant isolation valve provides the interface with the Reactor Coolant System. Valved interfaces with Radwaste Systems and the Spent Fuel Cooling System allow cleanup of reactor coolant during the decay heat removal process. An interface with the Makeup and Purification System provides a source of chemical addition for treatment of reactor coolant water.

The Decay Heat Removal System supplies the auxiliary pressurizer spray line with reactor coolant through a valved interface.

A piping line downstream of the Decay Heat Removal Coolers provides a recirculation path to the BWST.

Filling and draining of the fuel transfer canal is provided by the connections to the reactor vessel via the Core Flooding system.

In addition, interfaces from the Decay Heat Removal pump suction lines from the Reactor Building Sump & Drain System are provided to the Makeup and Purification System and to the Reactor Building Spray System pump suctions.

Also included in the license renewal scoping boundary of the Decay Heat Removal System are those portions of nonsafety-related piping and equipment that extend beyond the safety-related/nonsafety-related interface up to the location of the first seismic anchor, or to a point no longer in proximity to equipment performing a safety-related function, whichever extends furthest. This includes the nonsafety-related portions of the system located within the Reactor Building and the Intermediate Building. Included in this boundary are pressure retaining components relied upon to preserve the leakage boundary intended function of this portion of the system. For more information, refer to the License Renewal Boundary Drawing for identification of this boundary, shown in red.

Not included in the Decay Heat Removal System License Renewal Scoping Boundary are the following systems, which are separately evaluated as license renewal systems:

Decay Heat Closed Cooling System
Makeup and Purification System

Core Flooding System
Radwaste Systems
Reactor Coolant System
Reactor Building Spray System
Spent Fuel Cooling System
Reactor Building Pump & Drain System

Reason for Scope Determination

The Decay Heat Removal System meets 10CFR54.4(a)(1) because it is a safety-related system that is relied upon to remain functional during and following design basis events. It meets 10CFR54.4(a)(2) because failure of nonsafety-related portions of the system could prevent satisfactory accomplishment of function(s) identified for 10CFR54.4(a)(1). It also meets 10CFR54.4(a)(3) because it is relied upon in the safety analyses or plant evaluations to perform a function that demonstrates compliance with the Commission's regulations for Fire Protection (10CFR50.48), Environmental Qualification (10CFR50.49), and Station Blackout (10CFR50.63). The Decay Heat Removal System is not relied upon in any safety analyses or plant evaluations to perform a function that demonstrates compliance with the Commission's regulations for Anticipated Transient Without Scram (10CFR50.62), or Pressurized Thermal Shock (10 CFR 50.61).

System Intended Functions

1. Provide reactor coolant pressure boundary. The Decay Heat Removal System includes Reactor Building isolation valves to assure that radioactive material is not inadvertently transferred out of the Reactor Building. 10 CFR 54.4(a)(1)
2. Remove residual heat from the reactor coolant system. The Decay Heat Removal System removes decay heat from the core and residual heat from the reactor coolant during latter stages of cooldown. 10 CFR 54.4(a)(1)
3. Provide and maintain sufficient reactor coolant inventory for core cooling. The Decay Heat Removal System is designed to maintain core cooling for larger LOCA break sizes. The Decay Heat Removal System prevents boron precipitation in the reactor core post-LOCA. 10 CFR 54.4(a)(1)
4. Provide heat removal from safety related equipment. The Decay Heat Removal System removes decay heat from the core and residual heat from the reactor coolant during latter stages of cooldown. 10 CFR 54.4(a)(1)
5. Introduce negative reactivity. The Decay Heat Removal System is designed to inject borated water into the reactor vessel and maintain core cooling for larger LOCA break sizes. 10 CFR 54.4(a)(1)
6. Provide primary containment boundary. The Decay Heat Removal System provides Reactor Building isolation functions. 10 CFR 54.4(a)(1)
7. Resist non-safety related SSC failure that could prevent satisfactory accomplishment of a safety related function. 10 CFR 54.4(a)(2)
8. Relied upon in safety analyses or plant evaluations to perform a function that demonstrates compliance with the commission's regulations for Fire Protection (10 CFR 50.48) 10 CFR 54.4(a)(3)
9. Relied upon in safety analyses or plant evaluations to perform a function that demonstrates compliance with the commission's regulations for Environmental Qualification (10 CFR 50.49) 10 CFR 54.4(a)(3)
10. Relied upon in safety analyses or plant evaluations to perform a function that

demonstrates compliance with the commission's regulations for Station Blackout (10 CFR 50.63) 10 CFR 54.4(a)(3)

UFSAR References

1.2.5
6.1.2
9.5

License Renewal Boundary Drawings

LR-302-640
LR-302-641

Table 2.3.2-2 **Decay Heat Removal System**
Components Subject to Aging Management Review

Component Type	Intended Functions
Bolting	Mechanical Closure
Cyclone Separator	Pressure Boundary
Flame Arrestor	Fire Barrier
Heat exchanger components (Decay Heat Removal Coolers)	See CCCW System
Heater (BWST - electrical)	Pressure Boundary
Piping and fittings	Direct Flow
Piping and fittings	Leakage Boundary
Piping and fittings	Pressure Boundary
Pump Casing (Decay Heat Removal Pumps)	Pressure Boundary
Restricting Orifices	Pressure Boundary
Restricting Orifices	Throttle
Strainer Body	Pressure Boundary
Tanks (BWST)	Pressure Boundary
Tanks (Lube Oil External Reservoirs)	Pressure Boundary
Tanks (Lube Oil Open Overflow)	Leakage Boundary
Thermowell	Pressure Boundary
Valve Body	Leakage Boundary
Valve Body	Pressure Boundary

The aging management review results for these components are provided in:

Table 3.2.2-2 Decay Heat Removal System
Summary of Aging Management Evaluation

2.3.2.3 Makeup and Purification System (High Pressure Injection)

System Purpose

The Makeup and Purification System (High Pressure Injection) consists of the following systems: the plant Makeup and Purification System and the plant Chemical Addition System. The makeup and purification portion of the system is designed to control the inventory of the Reactor Coolant System during all phases of normal reactor operation. In the event of a LOCA, the system has an Emergency Core Cooling System (ECCS) function to inject borated water at high pressure into the reactor vessel for emergency cooling. The chemical addition portion of the system is designed to provide various chemistry functions related to the operation of the Reactor Coolant System, the Spent Fuel Cooling System, and the Radwaste System. In the event the Borated Water Storage Tank (BWST), part of the Decay Heat Removal System, is unavailable, the Boric Acid Mix Tank and Boric Acid Injection Pumps of the Chemical Addition System provide the concentrated boric acid needed to achieve cold shutdown.

The makeup and purification portion of the Makeup and Purification System (High Pressure Injection) has multiple purposes:

It injects borated water from the BWST into the core following a LOCA for emergency cooling. Operation of the Makeup and Purification System (High Pressure Injection) in the emergency injection mode will continue until aligned by operator action to the recirculation mode or manually terminated.

It controls the reactor coolant inventory during all phases of reactor operations:

It supplies the Reactor Coolant System with fill and operational makeup water;
It provides seal injection water for the reactor coolant pumps;
It provides for purification of the reactor coolant to remove corrosion and fission products;
It controls the boric acid concentration in the reactor coolant;
It accommodates temporary changes in reactor coolant volume due to small temperature changes, in conjunction with the pressurizer;
It maintains the proper concentration of hydrogen and corrosion-inhibiting chemicals in the Reactor Coolant System;
It provides makeup for core flood tanks; and
It vents gases from the Reactor Coolant System.

The chemical addition portion of the Makeup and Purification System (High Pressure Injection) has multiple purposes:

It provides concentrated boric acid solution for chemical shim control in the primary reactor coolant;
It provides boric acid solution to the core flooding tanks and the BWST;
It provides base solutions for pH control of the primary coolant and for regenerating resins and neutralizing solutions;
It provides a reducing agent for control of oxygen in the reactor coolant;
It provides a source of demineralized water for various uses in the primary system, the Radwaste System, and the spent fuel pool; and
It provides resin to demineralizers in the makeup and purification portion of the system and the

Radwaste System.

The Makeup and Purification System (High Pressure Injection) System accomplishes these purposes by providing the necessary tanks, pumps, piping systems, gas manifolds, and associated valves and controls to perform the required functions.

For the ECCS function, high pressure injection of borated water is initiated at: (1) a low Reactor Coolant System pressure less than 1600 psig or less than 500 psig (backup signal) or (2) a Reactor Building pressure greater than 4 psig. Automatic operation of the valves and pumps by the actuation signals changes the alignment of the system from its normal operating mode so that it may deliver water from the BWST into the reactor vessel via all four reactor coolant inlet lines. Two high-pressure Makeup and Purification System pumps are actuated upon receipt of an emergency safeguards initiation signal. One pump is capable of delivering the high pressure injection flow assumed in the LOCA analysis. One makeup pump is sufficient to prevent core damage for those smaller leak sizes which do not allow the RCS pressure to decrease rapidly to the point at which low pressure injection is initiated.

During normal reactor operation, the Makeup and Purification System (High Pressure Injection) continuously recirculates reactor coolant for purification and for supply of seal water to the reactor coolant pumps.

The other modes of operation of the Makeup and Purification System (High Pressure Injection) are aligned and actuated manually.

System Operation

Following a LOCA, high pressure injection of borated water is automatically initiated at: (1) a low RCS pressure less than 1600 psig or less than 500 psig (backup signal) or (2) a Reactor Building pressure greater than 4 psig. Automatic operation of the valves and pumps by the actuation signals transfers the system from its normal operating mode, so that water can be delivered from the BWST into the reactor vessel through all four reactor coolant inlet lines. The following automatic actions accomplish this change: the two makeup pumps selected to provide the Engineered Safety function start; the valve in each high-pressure injection line opens; the valves in the pump suction lines connecting to the BWST open; the pump minimum flow recirculation line valves close; and the normal operation makeup line isolation valve closes. In addition to these automatic actions, the pumps and valves can be remotely operated from the control room. The emergency high pressure injection flow path is from the BWST through the makeup pumps and to the reactor via the four reactor coolant cold legs. The emergency mode of operation will continue until manually terminated.

During normal plant power operation, one makeup pump of the Makeup and Purification System (High Pressure Injection) continuously supplies high pressure water from the Makeup Tank to the seals of each of the reactor coolant pumps and to a makeup line connection on one of the reactor inlet lines. Makeup flow is regulated by the reactor coolant volume control valve, which operates on signals from the pressurizer level controller.

Seal injection flow is automatically controlled at the desired rate. A portion of the water supplied to the reactor coolant pump seals leaks off as controlled bleed-off and returns to the makeup tank after passing through one of the two Seal Return Coolers and the Seal Return Filter.

Seal water inleakage to the reactor coolant makes a continuous letdown of reactor coolant necessary to maintain inventory. This letdown is also required to remove impurities and boric acid from the reactor coolant. The letdown fluid is cooled by the Letdown Coolers, reduced in pressure by the block orifice, and then passed through the Makeup and Purification Demineralizer to a three-way valve which directs flow either to the Makeup Tank, or to the Radwaste System if boric acid needs to be removed from the reactor coolant. Boron concentration in the reactor coolant is reduced by removing boric acid in the Radwaste System either through a demineralizer, with effluent returned to the Makeup Tank, or through feed-and-bleed, where reactor coolant is directed to a Reactor Coolant Bleed Tank in the Radwaste System, and level is maintained in the Makeup Tank with demineralized water.

The chemical addition portion of the Makeup and Purification System (High Pressure Injection) can be used to increase the boron concentration of the reactor coolant. Boric acid solution is available either from the Radwaste System where boron is reclaimed, or in the chemical addition portion of the Makeup and Purification System (High Pressure Injection) where boron solution is prepared. Boric acid enters the Makeup and Purification System (High Pressure Injection) upstream of the batch controller; concentrated solution can be mixed with makeup water or it can pass through heat-traced lines and be mixed with letdown flow upstream of the purification filters. Boron concentration and performance of the purification demineralizer is monitored through sampling of the reactor coolant at several locations in the system by the Liquid and Gas Sampling System.

The chemical addition portion of the Makeup and Purification System (High Pressure Injection) supplies chemicals to the Makeup Tank for addition to the reactor coolant. Lithium Hydroxide, used to control pH, and Hydrazine, used to scavenge Oxygen from the reactor coolant, are added upstream of the tank. Nitrogen and Hydrogen, also used to scavenge Oxygen, are added directly to the tank.

The chemical addition portion of the Makeup and Purification System (High Pressure Injection) provides service lines to each Makeup and Purification Demineralizer for resin bed replacement, including resin fill, nitrogen injection, and backwash, sluice, and rinse water.

System operation during normal plant conditions is accomplished remotely from the control room, with the exception of periodic switching of the Seal Return Coolers. The letdown flow rate is adjusted by remotely positioning the letdown flow control valve. The spare Makeup and Purification Demineralizer is placed in service by remote positioning of the demineralizer isolation valves. Remote positioning of the three-way valve and valves in the Radwaste System diverts the letdown flow to the Radwaste System. The reactor coolant volume control valve is automatically controlled by the pressurizer level controller.

For more detailed information, see UFSAR sections 6.1, 9.1, and 9.2.1.

System Boundary

The high pressure injection mode of the Makeup and Purification System (High Pressure Injection) scoping boundary begins with the makeup pump suction header isolation valves from the BWST which interface with the Decay Heat Removal System. The suction header feeds borated water from the BWST to the Makeup Pumps, which discharge to a common header that divides into four lines. Each of the four lines supplies flow through flow elements to one of the four reactor coolant cold legs, interfacing with the Reactor Coolant System at the check

valve downstream of the reactor building penetration on each line. The high pressure injection lines are cross-connected, to assure required flow in the event of a break in a high pressure injection line. Included in this boundary are the minimum flow recirculation lines from each of the Makeup Pump discharge lines. The minimum flow lines are headered together and return to the Makeup Tank upstream of the Seal Return Coolers. Also included in this high pressure injection flowpath are interfaces at isolation valves with the Decay Heat Removal System's low-pressure injection pump discharge so that suction water may continue to be provided long-term to the high pressure injection pumps from the Reactor Building Sump. This alignment allows continued high pressure injection in the event that reactor pressure remains above the shutoff head of the low pressure pumps following a LOCA.

The normal (non-emergency) makeup and purification mode of operation flowpath begins with the Makeup Tank and includes a suction supply line to the Makeup Pump suction header. The discharge line for the operating makeup pump supplying the seal injection and makeup flow divides into two lines. One line supplies flow to the makeup line connection on a reactor coolant loop cold leg, and the other supplies flow through a seal injection filter to a header that supplies seal injection flow to each of the four reactor coolant pumps. Included in this makeup supply flowpath are valves, flow elements, and other instrumentation required for control of the flow.

Bypass flow from the seal injection, and seal leakoff flow from the seal cavities return flow from the primary system. Bypass and seal leakoff flow from each of the four reactor coolant pumps are headered and returned to the Makeup Tank after passing through the Seal Return Filter and one of the two Seal Return Coolers. Included in this return flowpath are valves, flow devices, and other instrumentation required for control of the flow.

The continuous letdown flowpath from the "B" loop reactor coolant cold leg passes through the Letdown Coolers and block orifice, then through one of two Letdown Pre-Filters and one of two Makeup and Purification Demineralizers. From there, the flow is directed either to the Radwaste System or the Makeup Tank. Included in this return flowpath are valves, flow devices, and other instrumentation required for control of the flow.

A line from the makeup pump discharge header interfaces with the Core Flooding System, to provide an alternate Core Flood Tank fill source as required.

The Closed Cycle Cooling Water System provides cooling water for the Letdown Coolers, Seal Return Coolers, and Makeup and Purification Pump motor oil and lube oil coolers.

The chemical addition portion of the Makeup and Purification System (High Pressure Injection) that supplies reclaimed water begins with the Reclaimed Water Storage Tank. The Reclaimed Water Pump transfers the water to the Reclaimed Water Pressure Tank, which is supplied with blanketing nitrogen from the Containment Isolation System. Reclaimed water is directed to numerous users, including the BWST, multiple chemical mixing tanks and demineralizers in the chemical addition portion of the system and the Radwaste System, service lines for miscellaneous use in various plant areas, and multiple endpoints in the Reactor Coolant System and Radwaste System.

Mixing tanks in the chemical addition portion of the Makeup and Purification System (High Pressure Injection) supply various plant users. The Filter Precoat Tank discharges through the Precoat Filter Holding Pumps to the Precoat Filters in the Radwaste System. The Caustic Mix Tank provides flow to the Deborating Demineralizers and Neutralizer Mixing Tank in the

Radwaste System, to the Decay Heat Removal Pump suction lines in the Decay Heat Removal System, and to the purification filters in the Makeup and Purification System (High Pressure Injection). The Resin Addition Slurry Tank discharges to the resin fill lines for each of the Deborating Demineralizers, Cation Demineralizers, and Evaporator Condensate Demineralizers in the Radwaste System, and to the Makeup and Purification Demineralizers. The Lithium Hydroxide Mix Tank provides flow to the purification filters in the Makeup and Purification System (High Pressure Injection). The Boric Acid Mix Tank provides flow though the injection pumps to the BWST, the Makeup and Purification System (High Pressure Injection) upstream of the Makeup and Purification Filters, and the Radwaste System. The 4% Boric Acid Tank provides solution to the Core Flooding Tanks in the Core Flooding System.

All associated piping, components, and instrumentation contained in the above described flowpaths necessary for performance of their design function are included in the system evaluation boundary.

Also included in the license renewal scoping boundary of the Makeup and Purification System (High Pressure Injection) are those portions of nonsafety-related piping and equipment that extend beyond the safety-related/nonsafety-related interface up to the location of the first seismic anchor, or to a point no longer in proximity to equipment performing a safety-related function, whichever extends furthest. This includes the nonsafety-related portions of the system located within the Reactor Building and the Auxiliary Building. Included in this boundary are pressure retaining components relied upon to preserve the leakage boundary intended function of this portion of the system. For more information, refer to the License Renewal Boundary Drawing for identification of this boundary, shown in red.

Not included in the Makeup and Purification System (High Pressure Injection) license renewal scoping boundary are the following systems, which are separately evaluated as license renewal systems:

Decay Heat Removal System
Core Flooding System
Radwaste System
Reactor Coolant System
Closed Cycle Cooling Water System
Containment Isolation System
Liquid and Gas Sampling System
Instrument and Control Air System

<u>Reason for Scope Determination</u>

The Makeup and Purification System meets 10CFR54.4(a)(1) because it is a safety-related system that is relied upon to remain functional during and following design basis events. It meets 10CFR54.4(a)(2) because failure of nonsafety-related portions of the system could prevent satisfactory accomplishment of function(s) identified for 10CFR54.4(a)(1). It also meets 10CFR54.4(a)(3) because it is relied upon in the safety analyses or plant evaluations to perform a function that demonstrates compliance with the Commission's regulations for Fire Protection (10CFR50.48), Environmental Qualification (10CFR50.49), and Station Blackout (10CFR50.63). The Makeup and Purification System is not relied upon in any safety analyses or plant evaluations to perform a function that demonstrates compliance with the Commission's regulations for Anticipated Transient Without Scram (10CFR50.62), or Pressurized Thermal Shock (10 CFR 50.61).

System Intended Functions

1. Provide reactor coolant pressure boundary. The Makeup and Purification System has connections to the primary system. 10 CFR 54.4(a)(1)
2. Achieve and maintain the reactor core subcritical for any mode of normal operation or event. The Makeup and Purification System injects borated water into the reactor coolant for emergency core cooling. 10 CFR 54.4(a)(1)
3. Introduce emergency negative reactivity to make the reactor subcritical. The Makeup and Purification System injects borated water into the reactor coolant for emergency core cooling, and provides for chemical conditioning of the reactor coolant for reactivity control under normal operating conditions. 10 CFR 54.4(a)(1)
4. Provide and maintain sufficient reactor coolant inventory for core cooling. The Makeup and Purification System injects borated water into the reactor coolant for emergency core cooling. 10 CFR 54.4(a)(1)
5. Introduce negative reactivity. The Makeup and Purification System injects borated water into the reactor coolant, and provides for chemical conditioning of the reactor coolant for reactivity control under normal operating conditions. 10 CFR 54.4(a)(1)
6. Provide primary containment boundary. The Makeup and Purification System has connections penetrating the primary containment. 10 CFR 54.4(a)(1)
7. Resist non-safety related SSC failure that could prevent satisfactory accomplishment of a safety related function. The Chemical Addition portion of the Makeup and Purification System supplies concentrated boric acid used to achieve and maintain cold shutdown. The system is comprised of liquid-filled lines with a potential for spatial interaction with safety-related systems, and contains nonsafety-related piping that provides structural support for safety-related piping. 10 CFR 54.4(a)(2)
8. Relied upon in safety analyses or plant evaluations to perform a function that demonstrates compliance with the commission's regulations for Fire Protection (10 CFR 50.48) 10 CFR 54.4(a)(3)
9. Relied upon in safety analyses or plant evaluations to perform a function that demonstrates compliance with the commission's regulations for Environmental Qualification (10 CFR 50.49) 10 CFR 54.4(a)(3)
10. Relied upon in safety analyses or plant evaluations to perform a function that demonstrates compliance with the commission's regulations for Station Blackout (10 CFR 50.63) 10 CFR 54.4(a)(3)

UFSAR References

6.1
9.1
9.2.1

License Renewal Boundary Drawings

LR-302-660
LR-302-661
LR-302-662
LR-302-669
LR-302-670
LR-302-692

Table 2.3.2-3 **Makeup and Purification System (High Pressure Injection)**
Components Subject to Aging Management Review

Component Type	Intended Functions
Bolting	Mechanical Closure
Coolers	See CCCW System
Cyclone Separator	Pressure Boundary
Electric Heaters (Boric Acid Mix Tank Heater)	Pressure Boundary
Filter Housing (Letdown Filter, Letdown Pre-Filter, Seal Injection Filter)	Pressure Boundary
Filter Housing (Seal Return Filter)	Pressure Boundary
Filter Housing (Suction Lube Oil Filter)	Pressure Boundary
Flow Device	Leakage Boundary
Flow Device	Pressure Boundary
Flow Element	Pressure Boundary
Piping and fittings	Leakage Boundary
Piping and fittings	Pressure Boundary
Pump Casing (Aux. Gear Oil Pumps; Shaft Dr Gear Oil Pumps)	Pressure Boundary
Pump Casing (Aux. L.O. Pumps; Main L.O. Pumps)	Pressure Boundary
Pump Casing (Boric Acid Injection Pumps)	Pressure Boundary
Pump Casing (Lithium Hydroxide Tank Pump; Drum Chem. Add. Pump; Caustic Mix Tank Pump; Precoat Filter Holding Pumps; 4% Boric Acid Tank Pump; Zinc Injection Pump)	Leakage Boundary
Pump Casing (Makeup Pump Gear Unit Casing)	Pressure Boundary
Pump Casing (Makeup Pumps)	Pressure Boundary
Restricting Orifices	Pressure Boundary
Sight Glasses	Leakage Boundary
Tanks (Boric Acid Mix Tank)	Pressure Boundary
Tanks (Caustic Mix Tank, Lithium Hydroxide Mix Tank, Filter Precoat Tank, 4% Boric Acid Tank, Zinc Injection Tank)	Leakage Boundary
Tanks (Demineralizers)	Pressure Boundary
Tanks (Makeup Tank)	Pressure Boundary
Tanks (Pump & Motor Lube Oil Reservoir)	Pressure Boundary
Tanks (Resin Slurry Mix Tank)	Leakage Boundary
Thermowell	Pressure Boundary
Valve Body	Leakage Boundary
Valve Body	Pressure Boundary

The aging management review results for these components are provided in:

Table 3.2.2-3 Makeup and Purification System (High Pressure Injection) Summary of Aging Management Evaluation

2.3.2.4 Primary Containment Heating and Ventilation System

System Purpose

The Primary Containment Heating and Ventilation (PCHV) System consists of the following plant systems: Penetrations Air Cooling System, Reactor Building Emergency Cooling Water, Reactor Building Cooling System, and Reactor Building Miscellaneous Heating and Ventilation Systems.

The Reactor Building Cooling System is an Engineered Safeguards Systems designed to remove sensible and latent heat from the Reactor Building during normal and emergency conditions to maintain the building space temperature with the range of design temperatures. The systems accomplish this purpose by supplying filtered, cooled air to the reactor building. The systems are normally in operation.

The Reactor Building Emergency Cooling Water is an Engineered Safeguards System designed to limit post accident containment pressure and temperature. The system accomplishes this purpose by providing cooling water to the Reactor Building Air Handling Units via the Reactor Building Emergency Cooling Coils. The system is normally in emergency standby mode.

The Penetrations Air Cooling System is a normally operating, mechanical system designed to cool the containment penetrations. The system accomplishes this purpose by supplying filtered, cooled air from the outside or from the turbine hall to the Reactor Building penetrations.

The Reactor Building Miscellaneous Heating and Ventilation System is designed to heat and cool locations around the Reactor Building. The system accomplishes this purpose by supplying filtered, tempered air throughout the Reactor Building.

System Operation

The Reactor Building Cooling System is comprised of three air handling units and return air ductwork. Air is circulated from upper elevations, drawn into return air ducts to the Reactor Building Air Handling Units, and discharged to lower elevations. The conditioned air mixes with the bulk containment environment to provide overall cooling. Air from the Reactor Building is continuously circulated through the Reactor Building Air Handling Units, which are cooled via the Closed Cycle Cooling Water System during normal operation and the Reactor Building Emergency Cooling Water System during emergency operation.

Reactor Building Emergency Cooling Water is comprised of two 100% capacity Reactor Building Emergency Cooling Pumps, piping and fittings, containment isolation valves, and the Reactor Building Emergency Cooling Coils. During normal operation, the system is in emergency standby mode. During off-normal mode when Reactor Building average temperature approaches design temperatures, the system supplements normal cooling to provide additional heat removal. During emergency mode when temperature or pressure reaches design limits, the system is automatically initiated. When in operation, the system pumps river water from the Intake Screen and Pump House, through containment penetrations, through the Reactor Building Emergency Cooling Coils, to the River Water Discharge Line. The River Water Discharge Line is evaluated for License Renewal with the Open Cycle Cooling Water System.

The Penetrations Air Cooling System is comprised of two redundant Penetration Cooling Supply Fans, two redundant Penetration Air Coolers, and common ductwork. The fans draw either outside air or air from the Turbine Building hall, directs it through air coolers, to the containment penetrations requiring cooling. The air is then exhausted via the Auxiliary Building Exhaust System, which is evaluated with the Auxiliary and Fuel Handling Building Ventilation System. The Control Building Ventilation System provides cooling water to the Penetration Air Coolers.

The Reactor Building Miscellaneous Heating and Ventilation Systems are comprised of supply fans, air handling units, unit heaters, and ductwork and fittings. The systems are designed to provide ventilation to secondary shield wall in order to limit concrete surface temperature; transfer air from the lower elevations of the Reactor Building to the upper elevations to maintain a uniform Reactor Building temperature during normal operation; supply conditioned air to the Reactor Compartment, including penetration cavities, reactor vessel nozzles, and concrete shielding; and maintain the minimum ambient temperature in the Reactor Building during shutdown and integrated leak rate testing. The systems draw air from the Reactor Building, temper the air as required, and supply it to the aforementioned areas. The Reactor Building Miscellaneous Heating and Ventilation Systems are in scope for License Renewal due to structural interaction with safety related components.

For more detailed information, see UFSAR Sections 5.6, 6.3, 9.6.2.4, & 9.8.3.3.

System Boundary

The Reactor Building Cooling System boundary consists of the Reactor Building Air Handling Units and associated ductwork. Included in the boundary are the Reactor Building Normal Cooling Coils.

The Reactor Building Emergency Cooling Water boundary begins at the Reactor Building Emergency Cooling Pumps. The system continues through containment penetrations and the Reactor Building Emergency Cooling Coils. The system exits the reactor building and ends at the River Water Discharge Line. The system includes piping and fittings and containment isolation valves.

The Penetration Air Cooling boundary begins at the outside air inlet and the Turbine Building air inlet. The system continues through the Penetration Cooling Exhaust Fans, Penetration Air Coolers, and associated ductwork. The system boundary ends at the containment penetrations. All associated ductwork, components, and instrumentation contained within the flow path described above are included in the system evaluation boundary. The Penetration Air Cooler cooling coils are evaluated with the Control Building Ventilation System and the shell side is evaluated with the PCHV System.

The Reactor Building Miscellaneous Heating and Ventilation Systems boundary includes only the Reactor Building Compartment Coolers, which have a structural interaction with the Closed Cycle Cooling Water System.

Not included in the PCVH System License Renewal scoping boundary are the containment penetrations, which are evaluated with Structural Commodities.

Not included in the PCVH System License Renewal scoping boundary are the following

interfacing systems, which are separately evaluated as license renewal systems:

Closed Cycle Cooling Water System
Control Building Ventilation System
Emergency Feedwater System
Instrument and Control Air System
Open Cycle Cooling Water System
Reactor Building Sump and Drain System

Reason for Scope Determination

The Primary Containment Heating and Ventilation System meets 10 CFR 54.4(a)(1) because it is a safety-related system that is relied upon to remain functional during and following design basis events. The Primary Containment Heating and Ventilation System is in scope under 10 CFR 54.4(a)(2) because failure of nonsafety-related portions of the system would prevent satisfactory accomplishment of function(s) identified for 10 CFR 54.4(a)(1). It also meets 10 CFR 54.4(a)(3) because it is relied upon in the safety analyses or plant evaluations to perform a function that demonstrates compliance with the Commission's regulations for Fire Protection (10 CFR 50.48), Environmental Qualification (10 CFR 50.49), and Station Blackout (10 CFR 50.63). The Primary Containment Heating and Ventilation System is not relied upon in any safety analyses or plant evaluations to perform a function that demonstrates compliance with the Commission's regulation for Pressurized Thermal Shock (10 CFR 50.61) or Anticipated Transient Without Scram (10 CFR 50.62).

System Intended Functions

1. Provide heat removal from safety-related equipment. Reactor Building Emergency Cooling Water provides a means of cooling the Reactor Building Air Handling Units via the Emergency Cooling Coils. 10 CFR 54.4(a)(1)
2. Provide primary containment boundary. Reactor Building Emergency Cooling Water piping penetrates primary containment. 10 CFR 54.4(a)(1)
3. Provide heat removal from primary containment and provide primary containment pressure control. The Reactor Building Emergency Cooling Water limits post accident containment pressure and temperature. The Reactor Building Cooling System reduces the pressure and temperature inside containment following a LOCA. 10 CFR 54.4(a)(1)
4. Control combustible gas mixtures in the primary containment atmosphere. The Reactor Building Cooling System provides mixing of the containment air following a LOCA to prevent localized accumulations of hydrogen from exceeding flammable limits. 10 CFR 54.4(a)(1)
5. Maintain emergency temperature limits within areas containing safety-related components. The Reactor Building Cooling System removes heat following a LOCA in the Reactor Building. 10 CFR 54.4(a)(1)
6. Resist nonsafety-related SSC failure that could prevent satisfactory accomplishment of a safety-related function. Portions of the Primary Containment Heating and Ventilation System provide leakage boundary and structural support intended functions. The Penetration Air Cooling System maintains the concrete temperatures of the Primary Containment penetrations below allowable limits to prevent concrete degradation. 10 CFR 54.4(a)(2)
7. Relied upon in safety analyses or plant evaluations to perform a function that demonstrates compliance with the Commission's regulations for Fire Protection (10 CFR 50.48). The Penetration Air Cooling System contains fire dampers, which are required to isolate the Intermediate Building. 10 CFR 54.4(a)(3)

8. Relied upon in safety analyses or plant evaluations to perform a function that demonstrates compliance with the Commission's regulations for Environmental Qualification (10 CFR 50.49). 10 CFR 54.4(a)(3)
9. Relied upon in safety analyses or plant evaluations to perform a function that demonstrates compliance with the Commission's regulations for Station Blackout (10 CFR 50.63). The Reactor Building Cooling System is required to maintain Reactor Building temperature within NUMARC limits for SBO coping duration. 10 CFR 54.4(a)(3)

UFSAR References

5.6
6.3
9.6.2.4
9.8.3.3

License Renewal Boundary Drawings

LR-302-202
LR-302-610
LR-302-611
LR-302-708
LR-302-831

Table 2.3.2-4 Primary Containment Heating and Ventilation System Components Subject to Aging Management Review

Component Type	Intended Functions
Bolting	Mechanical Closure
Damper Housing	Pressure Boundary
Ducting and Components	Pressure Boundary
Expansion Joints	Pressure Boundary
Fan Housing	Pressure Boundary
Filter Housing	Pressure Boundary
Flow Element	Pressure Boundary
Heat exchanger components (RB Recirc Units)	Heat Transfer
Heat exchanger components (RB Recirc Units)	Pressure Boundary
Heat exchanger components (Reactor Compartment Coolers)	Structural Support
Piping and fittings	Leakage Boundary
Piping and fittings	Pressure Boundary
Pump Casing (Emergency Cooling Pumps)	Pressure Boundary
Thermowell	Pressure Boundary
Valve Body	Pressure Boundary

The aging management review results for these components are provided in:

Table 3.2.2-4 Primary Containment Heating and Ventilation System Summary of Aging Management Evaluation

2.3.2.5 Reactor Building Spray System

System Purpose

The Reactor Building Spray System is a mechanical, standby system designed to reduce Reactor Building pressure to nearly atmospheric pressure, to remove airborne fission products from the Reactor Building atmosphere and to minimize corrosion of equipment following a LOCA. The Reactor Building Spray System is in scope for License Renewal. The Reactor Building Spray System has interfaces with other systems that are not in the License Renewal boundary of the Reactor Building Spray System.

The Reactor Building Spray System removes energy from the environment by transferring heat from the higher temperature atmosphere to the lower temperature spray droplets discharged from spray nozzles that are arranged on two concentric spray headers located on the inside dome of the Reactor Building. Heat transfer continues until the spray droplets reach the saturation temperature associated with the pressure in the Reactor Building. This process transfers the energy from the Reactor Building atmosphere to the Reactor Building Sump. The Reactor Building Spray System supply source transfers from the Borated Water Storage Tank to the Reactor Building Sump in a recirculation mode following the depletion of the Borated Water Storage Tank.

Trisodium Phosphate (TSP), added to the Reactor Building Spray System, is used to remove airborne fission products from the Reactor Building atmosphere. The TSP is stored on Reactor Building Elevation 281' and is dissolved by the discharge from the Reactor Building spray header and RCS leakage . TSP has a secondary function to control the sump pH which minimizes corrosive attack on safety related components following a LOCA. The TSP baskets which hold the TSP are included in the scope of the Reactor Building License Renewal System.

The Reactor Building Spray System is designed with two redundant trains. The two redundant trains are required so that a single active failure in the Reactor Building Spray System will not prevent operation of the system or reduce its capacity below that required to maintain a safe condition.

System Operation

The Reactor Building Spray System consists of two Reactor Building Spray Pumps, two Reactor Building spray headers, and the necessary piping, valves, instrumentation, and controls.

During any Engineered Safeguards actuation, system valves are aligned to the spray nozzles. When the Reactor Building pressure reaches 30 psig, the Plant Protective System initiates operation of the Reactor Building Spray System. At this time the two Reactor Building Spray Pumps take suction from the Borated Water Storage Tank through the interface with the Decay Heat Removal System. The chemical spray solution is injected into the Reactor Building atmosphere through the Reactor Building Spray ring header. As the water level rises in the Reactor Building, it surrounds the baskets of TSP on elevation 281' and the TSP begins to dissolve into solution. The dissolving of the TSP is a completely passive process.

The discharge from the spray nozzles absorbs the heat energy from the Reactor Building

atmosphere, and airborne fission products and are collected in the Reactor Building sump.

Upon depletion of the Borated Water Storage Tank supply, suction supply transfers to the Reactor Building Sump and the water is recirculated using the Decay Heat Removal System piping.

For more detailed information, see UFSAR Section 6.2

System Boundary

The Reactor Building Spray System consists of two redundant trains. Suction supply for each of these trains is taken from either the Reactor Building Sump or from the Borated Water Storage Tank. The Reactor Building Sump and Borated Water Storage Tank are part of the Decay Heat Removal System and the TSP Baskets and the TSP chemical are part of the Reactor Building System. The Reactor Building Spray System discharges to the Decay Heat Removal System piping in its Engineered Safeguard low pressure injection mode to control pH for long term corrosion control purposes.

The Reactor Building Spray pumps take their suction from the Decay Heat Removal System. A piping interconnection exists on the suction of the pump which permits the two trains to be interconnected. On the discharge side of the Reactor Building Spray pump each of the two piping trains flow to individual spray headers located on the inside dome of the Reactor Building. Prior to the spray header in the Auxiliary Building, there is additional interconnection between the trains; this interconnection contains piping that discharges to the Borated Water Storage Tank in order to permit testing of the system without discharging through the spray nozzles into the Reactor Building. Check valves exist on the downstream side of the Reactor Building penetration for each train that function as containment isolation valves.

The Reactor Building Spray System also includes the instrument piping that senses Reactor Building pressure. There are four penetrations that exit the Reactor Building and provide input to these four instrument loops. The containment boundary extends outboard from the containment penetration to each of the pressure switches, pressure transmitters and isolation valves in the instrumentation loops.

The other three instrument loops downstream of the Reactor Building penetration include a main manifold. Connected to this manifold are five branch connections containing redundant pressure transmitters and pressure switches; in some loops pressure indicators are included. Test pressure connections are provided on all four loops to introduce nitrogen at both 5psi and 35psi from the Instrument & Control Air System.

Both of the Reactor Building Spray Pumps contain miscellaneous piping connected to the pumps that function to provide seal cooling and to permit drainage of the pump casing. In addition, the Reactor Building Spray pumps include connections to the Closed Cycle Cooling Water System to provide cooling water to the Reactor Building Spray pump bearings and to the motor air coolers.

All associated piping components and instrumentation contained within the flow path described above are included in the system evaluation boundary.

Also included in the license renewal scoping boundary of the Reactor Building Spray System are those portions of nonsafety-related piping and equipment that extend beyond the safety-

related/nonsafety-related interface up to the location of the first seismic anchor, or to a point no longer in proximity to equipment performing a safety-related function, whichever extends furthest. This includes the nonsafety-related portions of the system located within the Reactor Building and the Auxiliary Building. Included in this boundary are pressure retaining components relied upon to preserve the leakage boundary intended function of this portion of the system. For more information, refer to the License Renewal Boundary Drawing for identification of this boundary, shown in red.

Not included in the Reactor Building Spray License Renewal System scoping boundary are the following systems, which are separately evaluated as license renewal systems:

Auxiliary & Fuel Handling Building Ventilation System
Containment Isolation System
Closed Cycle Cooling Water System
Decay Heat Removal System
Instrument & Control Air System
Makeup & Purification System

Reason for Scope Determination

The Reactor Building Spray System meets 10 CFR 54.4(a)(1) because it is a safety safety-related system that is relied upon to remain functional during and following design basis events. It meets 10 CFR 54.4(a)(2) because failure of non-safety safety-related portions of the system could prevent satisfactory accomplishment of function(s) identified for 10 CFR 54.4(a)(1). It also meets 10 CFR 54.4(a)(3) because it is relied upon in the safety analyses or plant evaluations to perform a function that demonstrates compliance with the Commission's regulations for Fire Protection (10 CFR 50.48), Environmental Qualification (10 CFR 50.49) and Station Blackout (10 CFR 50.63). The Reactor Building Spray System is not relied upon in any plant evaluations to perform a function that demonstrates compliance with the Commission's regulation for Pressurized Thermal Shock (10 CFR 50.61) or Anticipated Transient Without Scram (ATWS) (10 CFR 50.62) .

System Intended Functions

1. Sense process conditions and generate signals for reactor trip or engineered safety features actuation. The Reactor Building Spray System includes pressure-sensing instrumentation that provides input to initiate the Reactor Building spray function. 10 CFR 54.4(a)(1)
2. Provide primary containment boundary. The Reactor Building Spray System includes Reactor Building isolation valves to assure that radioactive material is not inadvertently transferred out of the Reactor Building. 10 CFR 54.4(a)(1)
3. Provide heat removal from primary containment and provide primary containment pressure control. The Reactor Building Spray System includes nozzles that spray into the Reactor Building; the spray absorbs the heat energy in the building and the building pressure is reduced. 10 CFR 54.4(a)(1)
4. Provide removal of radioactive material from the primary containment atmosphere. Trisodium Phosphate sprayed from the Reactor Building spray nozzles performs the function of iodine scrubbing from a post-LOCA Reactor Building atmosphere. 10 CFR 54.4(a)(1)
5. Resist non-safety related SSC failure that could prevent satisfactory accomplishment of a safety related function. The Reactor Building Spray System contains nonsafety-related water filled lines in the Auxiliary Building that have the potential for spatial interactions (spray or

leakage) with safety related SSCs. 10CFR54.4(a)(2)
6. Relied upon in safety analyses or plant evaluations to perform a function that demonstrates compliance with the commission's regulations for Fire Protection. (10 CFR 50.48) 10 CFR 54.4(a)(3)
7. Relied upon in safety analyses or plant evaluations to perform a function that demonstrates compliance with the commission's regulations for Environmental Qualification. (10 CFR 50.49) 10 CFR 54.4(a)(3)
8. Relied upon in safety analyses or plant evaluations to perform a function that demonstrates compliance with the commission's regulations for Station Blackout. (10 CFR 50.63) 10 CFR 54.4(a)(3)

UFSAR References

1.4
1.5
6.0
6.2
6.4.5

License Renewal Boundary Drawings

LR-302-712

Table 2.3.2-5 **Reactor Building Spray System**
Components Subject to Aging Management Review

Component Type	Intended Functions
Bolting	Mechanical Closure
Cyclone Separator	Pressure Boundary
Flow Element	Pressure Boundary
Flow Element	Throttle
Piping and fittings	Direct Flow
Piping and fittings	Leakage Boundary
Piping and fittings	Pressure Boundary
Pump Casing	Pressure Boundary
Spray Nozzles	Spray
Tanks (Sodium Hydroxide)	Leakage Boundary
Tanks (Sodium Thiosulfate)	Leakage Boundary
Valve Body	Pressure Boundary

The aging management review results for these components are provided in:

Table 3.2.2-5 Reactor Building Spray System
Summary of Aging Management Evaluation

2.3.2.6 Reactor Building Sump and Drain System

System Purpose

The Reactor Building Sump & Drain System is a passive, mechanical, system designed to collect leakage within the Reactor Building during normal operations and during emergency events.

The Reactor Building Sump collects and stores leakage and condensation from equipment, floor drains, the liquid discharged from the Reactor Building Spray System and the Reactor Coolant lost during a LOCA. Equipment that drains to the Reactor Building Sump includes: the Reactor Coolant Pump mechanical seals, the Makeup & Purification Letdown Coolers and the atmospheric vapor condensed from the Reactor Building coolers.

Following a LOCA, the initial injection of water by the Decay Heat Removal System involves pumping water from the Borated Water Storage Tank (BWST) into the reactor vessel. Prior to being fully drained the control room transfers the suction of the Decay Heat Removal and Reactor Building Spray Pumps from the Borated Water Storage Tank to the Reactor Building Sump. This initiates recirculation of the spilled reactor coolant and injection water from the Reactor Building Sump to the Reactor Vessel via the Decay Heat Removal System to support long term cooling.

Decay Heat Removal Suction Strainers located in the Reactor Building Sump are designed to ensure that debris will not degrade the NPSH of the Decay Heat Removal Pumps or Reactor Building Spray Pumps below acceptable levels. These strainers are included in the scope of the Reactor Building Sump and Drainage System.

The Reactor Building Sump & Drain System is in scope for License Renewal. The Reactor Building Sump & Drain System also has several interfaces with other systems that are not in the license renewal boundary of the Reactor Building Sump and Drain System.

System Operation

The Reactor Building Sump & Drain System consists of the Reactor Building Sump, Decay Heat Removal Strainer, piping, valves and supporting instrumentation.

The only required operations during normal operations include monitoring Reactor Building Sump level to identify leakage sources within the Reactor Building and transferring the contents of the Reactor Building Sump to the Auxiliary Building Sump System. Increased sump level will alert the operators to increase their surveillance of accessible leak sources. The contents of the Auxiliary Building Sump are treated in the Radwaste System.

Following a LOCA, when the contents of the Borated Water Storage Tank are being injected into the reactor, the operator transfers the suction of the Decay Heat Removal and Reactor Building Spray Pumps from the Borated Water Storage Tank to the Reactor Building Sump prior to emptying the tank.

For more detailed information, see UFSAR Section 4.2, 5.2, 6.4 & 7.3

System Boundary

The Reactor Building Sump & Drain System consists of the Reactor Building sump, Decay Heat Removal Suction strainer, piping, valves and supporting instrumentation. Drainage from the Reactor Vessel Head Storage Stand, Reactor Building Floor Drains, the cavity below the Reactor Vessel, the Recirculation Coolant Pump seals, the Reactor Building Recirculation Units and the Makeup & Purification Letdown coolers flow to the Reactor Building Sump. The water discharged from the Reactor Building Spray System is also collected in the Reactor Building Sump.

Suction piping from the Reactor Building Sump is connected to the Decay Heat Removal Pumps in order to recirculate and cool the contents of the Reactor Building Sump & Drain System in a LOCA event.

The Reactor Building Sump & Drain System also consists of Level Switches and Transmitters that measure the water level in the Reactor Building Sump.

During normal operations the discharge from the Reactor Building Sump flows by gravity through isolation valves to the Auxiliary Building Sump. The Auxiliary Building Sump is evaluated as part of the Miscellaneous Floor and Equipment Drains System.

All associated piping components and instrumentation contained within the flow path described above is included in the system evaluation boundary.

Also included in the license renewal scoping boundary of the Reactor Building Sump and Drain System are those portions of nonsafety-related piping and equipment that extend beyond the safety-related/nonsafety-related interface up to the location of the first seismic anchor, or to a point no longer in proximity to equipment performing a safety-related function, whichever extends furthest. This includes the nonsafety-related portions of the system located within the Reactor Building and the Auxiliary Building. Included in this boundary are pressure retaining components relied upon to preserve the leakage boundary intended function of this portion of the system. For more information, refer to the License Renewal Boundary Drawing for identification of this boundary, shown in red.

Not included in the Reactor Building Sump & Drain License Renewal System scoping boundary are the following systems, which are separately evaluated as license renewal systems:

Decay Heat Removal System
Makeup & Purification (High Pressure) System
Miscellaneous Floor & Equipment Drains System
Primary Containment Heating & Ventilating System
Radwaste System
Reactor Building Spray System
Reactor Coolant System

Reason for Scope Determination

The Reactor Building Sump & Drain System meets 10 CFR 54.4(a)(1) because it is a safety-related system that is relied upon to remain functional during and following design basis events. It meets 10 CFR 54.4(a)(2) because failure of non-safety related portions of the system could prevent satisfactory accomplishment of function(s) identified for 10 CFR

54.4(a)(1). It also meets 10 CFR 54.4(a)(3) because it is relied upon in the safety analyses or plant evaluations to perform a function that demonstrates compliance with the Commission's regulations for Fire Protection (10 CFR 50.48) and Environmental Qualification (10 CFR 50.49). The Reactor Building Sump and Drain System is not relied upon in any safety analyses or plant evaluations to perform a function that demonstrates compliance with the Commission's regulation for Pressurized Thermal Shock (10 CFR 50.61), Anticipated Transient Without Scram (10 CFR 50.62) or Station Blackout (10 CFR 50.63).

System Intended Functions

1. Sense process conditions and generate signals for reactor trip or engineered safety features actuation. The Reactor Building Sump Level Transmitters continuously display in the Control Room and their output data is used to provide input to operator actions credited to mitigate an accident. 10 CFR 54.4(a)(1)
2. Provide and maintain sufficient reactor coolant inventory for core cooling. The Reactor Building Sumps & Drain System collects water inventory from LOCA events for recirculation to the reactor. Strainers in the Reactor Building Sump protect the Decay Heat Removal and Reactor Building Spray Pumps from debris. 10 CFR 54.4(a)(1)
3. Provide primary containment boundary. The Reactor Building Sump & Drain System includes Reactor Building isolation valves to assure that radioactive material is not inadvertently transferred out of the Reactor Building. 10 CFR 54.4(a)(1).
4. Resist non-safety related SSC failure that could prevent satisfactory accomplishment of a safety related function. The Reactor Building Sump & Drain System contains non-safety related water filled lines in the Auxiliary Building and in the Reactor Building which have the potential for spatial interactions (spray or leakage) with safety related SSCs. 10CFR54.4(a)(2)
5. Relied upon in safety analyses or plant evaluations to perform a function that demonstrates compliance with the commission's regulations for Fire Protection. 10CFR54.4(a)(3)
6.. Relied upon in safety analyses or plant evaluations to perform a function that demonstrates compliance with the commission's regulations for Environmental Qualification. The Reactor Building Sump Level Instrumentation is in the scope of the Environmental Qualification regulation. 10CFR54.4(a)(3)

UFSAR References

6.1.3.2
6.4.5
7.3.2.2

License Renewal Boundary Drawings

LR-302-719

Table 2.3.2-6 **Reactor Building Sump and Drain System**
Components Subject to Aging Management Review

Component Type	Intended Functions
Bolting	Mechanical Closure
Piping and fittings	Direct Flow
Piping and fittings	Leakage Boundary
Piping and fittings	Pressure Boundary
Strainer Body	Structural Support
Strainer Element	Filter
Tanks (Rx Bldg Sump)	Pressure Boundary
Valve Body	Leakage Boundary
Valve Body	Pressure Boundary

The aging management review results for these components are provided in:

Table 3.2.2-6 Reactor Building Sump and Drain System
Summary of Aging Management Evaluation

2.3.3 AUXILIARY SYSTEMS

The following systems are addressed in this section:

- Auxiliary and Fuel Handling Building Ventilation System (Section 2.3.3.1)
- Auxiliary Steam System (Section 2.3.3.2)
- Circulating Water System (Section 2.3.3.3)
- Closed Cycle Cooling Water System (Section 2.3.3.4)
- Containment Isolation System (Section 2.3.3.5)
- Control Building Ventilation System (Section 2.3.3.6)
- Cranes and Hoists (Section 2.3.3.7)
- Diesel Generator Building Ventilation System (Section 2.3.3.8)
- Emergency Diesel Generators and Auxiliary Systems (Section 2.3.3.9)
- Fire Protection System (Section 2.3.3.10)
- Fuel Handling and Fuel Storage System (Section 2.3.3.11)
- Fuel Oil System (Section 2.3.3.12)
- Hydrogen Monitoring (Section 2.3.3.13)
- Instrument and Control Air System (Section 2.3.3.14)
- Intake Screen and Pump House Ventilation System (Section 2.3.3.15)
- Intermediate Building Ventilation System (Section 2.3.3.16)
- Liquid and Gas Sampling System (Section 2.3.3.17)
- Miscellaneous Floor and Equipment Drains System (Section 2.3.3.18)
- Open Cycle Cooling Water System (Section 2.3.3.19)
- Radiation Monitoring System (Section 2.3.3.20)
- Radwaste System (Section 2.3.3.21)
- Service Building Chilled Water System (Section 2.3.3.22)
- Spent Fuel Cooling System (Section 2.3.3.23)
- Station Blackout and UPS Diesel Generator System (Section 2.3.3.24)
- Water Treatment & Distribution System (Section 2.3.3.25)

2.3.3.1 Auxiliary and Fuel Handling Building Ventilation Systems

System Purpose

The Auxiliary and Fuel Handling Building Ventilation (AFBV) Systems consist of the (1) Auxiliary and Fuel Handling Buildings Heating and Ventilation System, (2) Nuclear Services Closed Cooling Water (NSCCW) Pumps and Decay Heat (DH) Pumps Cooling System, (3) Spent Fuel Cooling Pumps Cooling System, and (4) Fuel Handling Building ESF Ventilation System (FHBESFVS). The AFBV System is in scope for License Renewal; however, portions of the system are not required to perform intended functions and are not in scope.

The purpose of the system is to provide filtered tempered air for ventilation to the Auxiliary and Fuel Handling Buildings, maintain a negative pressure relative to the outside environment, cool selected areas where heat generation is unusually high, and to control radioactive material released in the exhaust air.

The AFBV System accomplishes these purposes by supplying outside air via fans through electric heaters to the Auxiliary and Fuel Handling Buildings. It supplies cooled air via fans and air coolers to the areas where heat generation is unusually high. Exhaust air is filtered by the system prior to release.

The entire AFBV System except for the FHBESFVS is in service during normal plant operation. The FHBESFVS is placed into operation prior to any movement of irradiated fuel within the Fuel Handling Building.

System Operation

The AFBV System is comprised of supply and exhaust fans, coolers, ductwork and fittings, dampers, electric heaters, filter banks, and instrumentation and control.

Spent Fuel Cooling Pumps Room Cooling & NSCCW Pumps and DH Pumps Room Cooling

The Spent Fuel Cooling Pumps room cooling and NSCCW Pumps and DH Pumps room cooling are in the scope of License Renewal. The pump room coolers are comprised of seismic Category I cooling units, ductwork, and fittings. Both have two redundant 100 percent capacity units.

The cooling units operate continuously with thermostatic control valves regulating the flow of cooling water to the coils to limit the temperature to at or below the maximum permissible temperature. The coolers are cooled by the Closed Cycle Cooling Water System.

Fuel Handling Building ESF Ventilation

The FHBESFVS is in the scope of License Renewal. It is placed into operation prior to any movement of irradiated fuel within the Fuel Handling Building and designed to filter and exhaust air. It is continuously operated during the entire fuel handling operation. While the FHBESFVS is in operation, the operating floor ventilation supply and exhaust portion of the Fuel Handling Building Normal Ventilation (FHBNVS) is isolated.

It is comprised of two 100 percent capacity redundant filter trains, each containing a filter bank

and exhaust fan. The FHBESFVS draws air from the fuel handling operating floor above the fuel pool, through one of the two filter trains, and exhausts to the atmosphere.

Auxiliary and Fuel Handling Buildings Heating and Ventilation

The Auxiliary and Fuel Handling Buildings Heating and Ventilation Systems consist of the Auxiliary Building Ventilation System and the FHBNVS. Auxiliary and Fuel Handling Buildings Heating and Ventilation subsystem is comprised of two supply fans; four exhaust fans; roughing, HEPA, and radioiodine absorber filter systems; ductwork, dampers, and fittings; and instrumentation and control. The supply and exhaust duct systems are arranged to direct the air flow to areas of progressively greater potential radioactivity prior to exhaust through the filter banks. It is also designed to maintain a negative pressure in the buildings with respect to outside to preclude an unmonitored release of radioactive material to the environs.

During normal operation, the supply fans to and exhaust fans from the Auxiliary and Fuel Handling Buildings operate continuously. Where standby fans have been provided, the inactive fan is isolated by automatic control dampers. During emergency and accident conditions, it is not necessary to maintain the negative pressure to mitigate offsite consequences; therefore, the Auxiliary and Fuel Handling Building Heating and Ventilation subsystem does not perform any Intended Functions and is not in scope.

For more detailed information, see UFSAR Sections 9.8.2, 9.8.3, 9.8.5, & 14.2.2.1.

System Boundary

The Spent Fuel Cooling Pumps Cooling and NSCCW and DH Pumps Cooling begin at the coolers, which draw air from the Auxiliary Building. They continue through ductwork, fittings, and instrumentation, and end when they discharge into the Spent Fuel Coolant Pumps room and NSCCW Pumps and DH Pumps room. The coolers are cooled by the Closed Cooling Water System.

The FHBESFVS begins at two fire dampers above the fuel handling operating floor about the fuel pool where it draws air. The exhaust air continues to a common exhaust duct, which runs along the side of the Fuel Handling Building north wall and over the Auxiliary Building roof. On the Auxiliary Building roof, the ductwork branches into two ducts that are connected to two redundant filter trains. The discharge from each train is connected to a common discharge duct that terminates at a local release point on the east wall of the Fuel Handling ESF ventilation system enclosure. The system boundary ends at this release point. Prior to the release point, the Radiation Monitoring System monitors the exhaust air for radioactive particulate, iodine, and gaseous activity. The major components of the Fuel Handling Building ESF area ventilation system are located on the roof of the Auxiliary Building in a seismically qualified enclosure.

Not included in the AFBV scoping boundary are the air intake tunnel and its associated non-structural components. The air intake tunnel is evaluated with the Air Intake Structure. The non-structural aspects of the air intake tunnel are evaluated with the Control Building Ventilation System. Not included in the AFBV boundary are the cooling coils for the air coolers, which are evaluated with the Closed Cooling Water System.

Not included in the AFBV license renewal scoping boundary are the following interface

systems, which are separately evaluated as license renewal systems:

Closed Cycle Cooling Water System
Control Building Ventilation System
Instrument and Control Air System
Radiation Monitoring System

Reason for Scope Determination

The Auxiliary and Fuel Handling Building Ventilation System meets 10 CFR 54.4(a)(1) because it is a safety related system that is relied upon to remain functional during and following design basis events. The Auxiliary and Fuel Handling Building Ventilation System is not in scope under 10 CFR 54.4(a)(2) because failure of nonsafety-related portions of the system would not prevent satisfactory accomplishment of function(s) identified for 10 CFR 54.4(a)(1). It also meets 10 CFR 54.4(a)(3) because it is relied upon in the safety analyses or plant evaluations to perform a function that demonstrates compliance with the Commission's regulations for Fire Protection (10 CFR 50.48) and Station Blackout (10 CFR 50.63). The Auxiliary and Fuel Handling Building Ventilation Systems is not relied upon in any safety analyses or plant evaluations to perform a function that demonstrates compliance with the Commission's regulation for Environmental Qualification (10 CFR 50.49), Pressurized Thermal Shock (10 CFR 50.61), or Anticipated Transient Without Scram (10 CFR 50.62).

System Intended Functions

1. Maintain emergency temperature limits within areas containing safety-related components. Provide heat removal from the Closed Cooling Water Pumps room and the Spent Fuel Cooling Pumps room to maintain area within temperature limits set in UFSAR Section 9.8.5 at all times. 10 CFR 54.4(a)(1)
2. Remove radioactive material from the atmosphere of confined spaces outside primary containment. Required to mitigate the release of radioactive material in the event of a fuel handling accident in the Fuel Handling Building. 10 CFR 54.4(a)(1)
3. Relied upon in safety analyses or plant evaluations to perform a function that demonstrates compliance with the Commission's regulations for Fire Protection (10 CFR 50.48). Fire dampers are required to function in the event of a fire. 10 CFR 54.4(a)(3)
4. Relied upon in safety analyses or plant evaluations to perform a function that demonstrates compliance with the Commission's regulations for Station Blackout (10 CFR 50.63). Maintain temperature limits within NUMARC limits for SBO coping duration. 10 CFR 54.4(a)(3)

UFSAR References

9.8.2
9.8.3
9.8.5
14.2.2.1.b.1

License Renewal Boundary Drawings

LR-302-610
LR-302-831
LR-302-833 Sh. 1
LR-302-833 Sh. 2
LR-302-841

Table 2.3.3-1 **Auxiliary and Fuel Handling Building Ventilation Systems**
Components Subject to Aging Management Review

Component Type	Intended Functions
Bolting	Mechanical Closure
Damper Housing	Pressure Boundary
Ducting and Components	Pressure Boundary
Expansion Joints	Pressure Boundary
Fan Housing	Pressure Boundary
Filter Housing	Pressure Boundary
Piping and fittings	Pressure Boundary
Thermowell	Pressure Boundary
Valve Body	Pressure Boundary

The aging management review results for these components are provided in:

Table 3.3.2-1 Auxiliary and Fuel Handling Building Ventilation Systems Summary of Aging Management Evaluation

2.3.3.2 Auxiliary Steam System

System Purpose

The Auxiliary Steam (AS) System consists of the following plant systems: Auxiliary Steam, Auxiliary Boilers, and Auxiliary Boiler Chemical Addition Systems.

The purpose of the AS System is to provide steam to the Main Feedwater Pump Turbines, turbine gland seals, and feedwater heaters during startup, and to supply steam to the Emergency Feedwater Pump Turbine during shutdown, if required. It also distributes steam to heat components during all plant conditions, as required.

The AS System accomplishes this purpose by distributing steam to the supplied systems from the Main Steam System or the Extraction Steam System, when available. When either of these systems is not available, steam is supplied from the Auxiliary Boilers, which use fuel oil combustion as a heat source.

The AS System also provides part of the Main Condenser vacuum boundary, through the heating loop in the Auxiliary Steam Boilers.

System Operation

The Auxiliary Steam (AS) System is comprised of piping, piping components, piping elements, instrumentation, and two (2) boilers. The AS System is designed to distribute steam from the Extraction Steam System for component heating during power operations. During times when Extraction Steam is not available, the Auxiliary Boilers may be operated to provide a source of steam. The Auxiliary Boilers are also operated to provide steam to operate the Main and Emergency Feedwater Pumps and for turbine gland sealing when steam from the Main Steam System is not available. When the boilers are shut down, steam from the Extraction Steam System is supplied to maintain boiler and piping temperature in a standby condition.

The system flow path begins at the Auxiliary Boilers and goes to the main steam distribution header. It continues through piping and valves up to the isolation valves for the individual steam loads. The flow path is also from the Extraction Steam System, through the auxiliary steam header, to the individual component heat loads.

The chemical addition portion of the Auxiliary Steam (AS) System is comprised of chemical mixing tanks, chemical injection/feed pumps, oil traps, piping, piping components, piping elements, and instrumentation.

The flowpath of the chemical addition system begins at the chemical mixing tanks. It continues through the chemical injection/feed pumps, oil traps, piping, piping components, and piping elements to the Auxiliary Boilers and Auxiliary Boiler feedwater header.

For more detailed information, see UFSAR Section 10.3.4.

System Boundary

The Auxiliary Steam (AS) System boundary begins at the Auxiliary Boilers, and continues through the main supply header to the following steam loads:

- Emergency Feedwater Pump Turbine up to the Auxiliary Steam supply valve
- Feedwater Pump Turbine Auxiliary Steam supply check valves
- Feedwater Heater Auxiliary Steam supply valve
- Auxiliary Steam Radwaste Evaporation control valve
- Discharge at the Decontamination Pit
- Steam supply connection to the Waste Evaporators
- Waste Storage and Reclaimed Boric Acid Tank Heaters
- Bleed Tank valve and Miscellaneous Radioactive Waste Storage Tank
- Reclaimed Boric Acid Tank supply valves
- Supply valves for the Condensate Return Unit, the Auxiliary Steam Condensate Return Pumps, to the discharge valve and flexible connection to the tank heaters
- Supply valves for the Spent Resin Storage Tank and Used Precoat Tank
- Feedwater trap outlet and bypass valves and the flowpath up to the Main Condenser
- Radwaste steam trap outlet valves

The system boundary also begins at the Auxiliary Boiler chemical mixing tanks, and continues through the Auxiliary Boiler chemical injection/feed pumps and oil traps, to the Auxiliary Boilers and Auxiliary Boiler feedwater header. The boundary also includes the flowpath to the following:

- Sample Cooler supply valves
- Sixth Stage Extraction Steam, through the strainers, to the Main Condenser connection, and also to the High Pressure Turbine connection
- Auxiliary Boiler Blowdown Tank, to the vent to atmosphere, and to the Auxiliary Boiler Blowdown Sump
- Eighth Stage Extraction Steam pegging steam valve
- Condensate Storage Tank isolation valve
- Eighth Stage Feedwater Heater Auxiliary Steam supply valve

The boundary also includes the fuel oil lines beginning at the atomizing steam/air stop valves for the Auxiliary Boiler burners. The system continues to the Auxiliary Boilers and up to the atomizing steam check valve connection with the Instrument and Control Air System.

All associated piping, components and instrumentation contained within the flow path described above are included in the system evaluation boundary.

The portion of the Auxiliary Steam piping inside the Waste Evaporators is not in scope because failure of this piping would not affect safety-related equipment or an intended function. This piping is contained within the evaporator and any leakage would be contained by the evaporator itself.

The Auxiliary Boiler feed pumps are required to be secured, if operating, to prevent draindown of the Condensate Storage Tanks for Fire Protection. This function is achieved through active electrical components.

Also included in the License Renewal scoping boundary of the Auxiliary Steam (AS) System are those portions of nonsafety-related piping and equipment that extend beyond the safety-related/nonsafety-related interface up to the location of the first seismic anchor, or to a point no longer in proximity to equipment performing a safety-related function, whichever extends furthest. Included in this boundary are pressure retaining components relied upon to preserve the leakage boundary intended function of this portion of the system. For more information,

refer to the License Renewal Boundary Drawing for identification of this boundary, shown in red.

Not included in the AS System License Renewal scoping boundary are the following interfacing systems, which are separately evaluated as License Renewal systems:

Condensate System
Emergency Feedwater System
Extraction Steam System
Feedwater System
Fuel Oil System
Instrument and Control Air System
Main Steam System
Miscellaneous Floor and Equipment Drains System
Radwaste System
Water Treatment & Distribution System

Reason for Scope Determination

The Auxiliary Steam System is not in scope under 10 CFR 54.4(a)(1) because no portions of the system are safety-related or relied upon to remain functional during and following design basis events. It meets 10 CFR 54.4(a)(2) because failure of nonsafety-related portions of the system could prevent satisfactory accomplishment of function(s) identified for 10 CFR 54.4(a)(1). It also meets 10 CFR 54.4(a)(3) because it is relied upon in the safety analyses and plant evaluations to perform a function that demonstrates compliance with the Commission's regulations for Fire Protection (10 CFR 50.48). The Auxiliary Steam System is not relied upon in any safety analyses or plant evaluations to perform a function that demonstrates compliance with the Commission's regulation for Environmental Qualification (10 CFR 50.49), Pressurized Thermal Shock (10 CFR 50.61), Anticipated Transient Without Scram (10 CFR 50.62), or Station Blackout (10 CFR 50.63).

System Intended Functions

1. Resist nonsafety-related SSC failure that could prevent satisfactory accomplishment of a safety-related function. Piping components are located such that they may spatially interact with safety-related equipment. The auxiliary boiler heating loop is also required for main condenser vacuum which is necessary for the mitigation of the steam generator tube failure and rod ejection accidents. 10 CFR 54.4(a)(2)
2. Relied upon in safety analyses or plant evaluations to perform a function that demonstrates compliance with the Commission's regulations for Fire Protection (10 CFR 50.48). The Auxiliary Boiler Feed Pumps are required to be secured, if operating, to prevent draindown of the Condensate Storage Tanks. 10 CFR 54.4(a)(3)

UFSAR References

5.4.4.2
10.3.4

License Renewal Boundary Drawings

LR-302-051
LR-302-171

LR-302-175
LR-302-165
LR-302-011
LR-302-042
LR-302-052
LR-302-121
LR-302-141
LR-302-231
LR-302-690
LR-302-692
LR-302-693

Table 2.3.3-2 **Auxiliary Steam System**
Components Subject to Aging Management Review

Component Type	Intended Functions
Boiler Casing (Auxiliary Boiler outer casing)	Leakage Boundary
Bolting	Mechanical Closure
Heat exchanger components (WDL Tank Heaters)	Leakage Boundary
Hoses	Leakage Boundary
Piping and fittings	Leakage Boundary
Piping and fittings	Pressure Boundary
Pump Casing (Aux Boiler Chem Injection)	Leakage Boundary
Pump Casing (Aux Boiler Feed Pump)	Leakage Boundary
Pump Casing (Condensate Return Unit Pumps)	Leakage Boundary
Restricting Orifices	Leakage Boundary
Sight Glasses	Leakage Boundary
Steam Traps	Leakage Boundary
Steam Traps	Pressure Boundary
Strainer Body	Leakage Boundary
Tanks (Ammonia Injection)	Leakage Boundary
Tanks (Aux Boiler Blowdown)	Leakage Boundary
Tanks (Condensate Return Unit)	Leakage Boundary
Tanks (Hydrazine Injection)	Leakage Boundary
Valve Body	Leakage Boundary
Valve Body	Pressure Boundary

The aging management review results for these components are provided in:

Table 3.3.2-2 Auxiliary Steam System
Summary of Aging Management Evaluation

2.3.3.3 Circulating Water System

System Purpose

The Circulating Water (CW) System consists of the following plant systems: Mechanical components of the Natural Draft Cooling Towers (NDCTs), Circulating Water System, Condenser Amertap System, and Circulating Water Biocide System. The CW System is a mechanical system designed to provide cooling water to the Main Condensers, Auxiliary Condensers and Main and Auxiliary Vacuum Pumps under normal operation.

The purpose of the CW system is to provide cooling water to the Main and Auxiliary Condensers and Main and Auxiliary Vacuum Pumps. The CW System accomplishes this by circulating river water through the Main and Auxiliary Condensers, and through the Main and Auxiliary Condenser Air Removal System to absorb process heat which is then rejected through the two Natural Draft Cooling Towers. The system also includes a chemical injection system for the addition of chemicals that control biological growth in the system and other chemical parameters. The Amertap condenser cleaning is a closed system that helps maintain cleanliness of the Main and Auxiliary Condensers.

The CW System is normally in operation and is manually controlled.

The CW System is in scope for License Renewal. However, portions of the system are not in scope. The mechanical components of the Natural Draft Cooling Towers and the components associated with the Circulating Water Biocide function are not in scope because these components are not connected to a safety-related system, they do not functionally support an intended function, and they do not have the potential to spatially interact with safety-related components.

System Operation

The Circulating Water System is comprised of the mechanical components of the Natural Draft Cooling Towers, Circulating Water Pumps, piping and components, and instrumentation and control.

The Circulating Water System is comprised of six (6) Circulating Water Pumps and two parallel piping paths to the tandem twin shell Condenser and two Auxiliary Condensers, as well as through coolers for the Main and Auxiliary Condenser Air Removal System. The system is normally in operation. The CW Pumps, located in the Circulating Water Pump House, obtain suction from the main circulating water flume. The CW pumps discharge to two parallel strings, consisting of a tunnel and piping arrangement through a tandem twin shell Main Condenser and two Auxiliary Condensers, and terminate in two Natural Draft Cooling Towers. The cooling water is then collected in the Cooling Tower Basins (evaluated with the Natural Draft Cooling Towers structure) which supply the main circulating flume and the cycle is repeated. The CW System piping and tunnel arrangement is such that two parallel loops are provided with appropriate cross connections. In addition, each loop incorporates as part of the cooling tower piping, a cooling tower bypass to the cooling tower basin. System redundancy is achieved by the use of six pumps. Motive power for the system is provided by the Circulating Water pumps, which are powered by the 4160 V Auxiliary System. Makeup to the system may be provided by Secondary Service River Water or Nuclear Service River Water.

The cleaning system is comprised of two (2) Amertap systems, one for each CW path. Amertap condenser cleaning operates on a closed cycle recirculating basis. Elastic sponge rubber balls or abrasive balls, which are oversize in comparison to the inner tube diameter, are injected into the cooling water flow and are forced through the condenser tubes. The recirculating unit consists of a pump and the collector, a device for trapping the balls for purposes of checking the number and size of the balls. There is no system redundancy. There is a separate and complete Amertap system for each of the two circulating water circuits. Motive power for the system is provided by the recirculating pumps. Both pumps are located south of the main condenser beneath the grating on which the ball collectors are mounted.

The chemical addition from the Circulating Water Biocide System is comprised of storage tanks, addition pumps, mixing ejectors, diffusers with flow indicators and manual flow control valves, associated piping, instrumentation and control. The system consists of sodium hypochlorite, sulfuric acid, sodium bromide, scale inhibitor, dispersants, and other associated chemicals. The system is initiated as specified by chemistry requirements in a manual mode when the circulating water system is in operation. The system flow path begins at the storage tank, from which acid is continuously pumped at a controlled rate and injected into a mixing tee, where it is diluted with cooling tower water and then added to the circulating water pump intake flume.

The Natural Draft Cooling Towers are comprised of two cross flow, natural draft, reinforced concrete, hyperbolic shell cooling towers. The system is normally in operation. Cooling tower blowdown, whose purpose is to reduce the quantity of total solids in the Condenser Cooling Water System, enters a common discharge header which dumps to the river water dump line for return to the river. Heated Water from the outlets of the two sides of the main condensers is piped to the two cooling towers. Heated water is evenly distributed around the tower and flows through orifices in the basin floor, it then falls downward over the fill and through the draft of the tower into the Cold Water Basin.

For more detailed information, see UFSAR Section 9.6.

System Boundary

The Circulating Water (CW) System boundary begins at the Circulating Water Pump suction piping in the Circulating Water Pump House, and includes the pump suction expansion joints, the Circulating Water Pumps, discharge expansion joints, and piping leading to the circulating water supply tunnel to the Main Condenser, and the system continues up to the condenser inlet connections. The system continues from the Main Condenser outlet connections, through the circulating water discharge tunnel, and up to the Natural Draft Cooling Tower basins. The system also includes the piping from the circulating water supply tunnel, up to and through the Main Vacuum Pump seal cooler. The boundary continues from the pump seal cooler through the Main Vacuum Pump lube oil cooler, and returns to the Main Vacuum Pump seal cooler. The system continues through the Main Vacuum Pump seal cooler, and discharges into Circulating Water System discharge lines from the Main Condenser. The boundary also includes the flow path from the main inlet tunnels up to the Auxiliary Condensers, and from the Auxiliary Condensers to the main discharge tunnels.

The system also includes the piping from the circulating water supply tunnel, up to and through the Auxiliary Vacuum Pump seal coolers, and back to the Main Condenser discharge lines.

The system also includes branch piping from the Main Condenser discharge lines to the

emergency caustic feed isolation valves, and to the blowdown line isolation valves.

The system also includes piping downstream of the two Open Cycle Cooling Water System makeup isolation valves, up to the NDCT discharge tunnel, as well as the Amertap collector tank supply isolation valves, through each tank, and through the discharge isolation valves.

All associated piping, components and instrumentation contained within the flow path described above are included in the system evaluation boundary.

The License Renewal scoping boundary of the CW System encompasses the liquid-filled portion of the system that is located in proximity to equipment performing a safety-related function. This includes the liquid-filled portions of the system located within the Turbine Building. Included in this boundary are pressure retaining components relied upon to preserve the leakage boundary intended function of this system. For more information, refer to the License Renewal Boundary Drawing for identification of this boundary, shown in red.

Not included in the system boundary are the components associated with the Circulating Water Biocide System. These components are not in scope because they are not connected to a safety-related system, they do not functionally support an intended function, and they do not have the potential to spatially interact with safety-related components.

Not included in the system boundary are the mechanical components associated with the Natural Draft Cooling Towers. These components are not in scope because they are not connected to a safety-related system, they do not functionally support an intended function, and they do not have the potential to spatially interact with safety-related components. The structural portions of the Natural Draft Cooling Towers are evaluated in the Natural Draft Cooling Towers scoping.

Not included in the scoping boundary are the main and auxiliary condensers, main and auxiliary vacuum pumps, and tube side of the lube oil heat exchangers and seal water coolers, which are evaluated separately with the Condensers and Air Removal Systems.

Not included in the CW License Renewal scoping boundary are the following interface systems, which are separately evaluated as License Renewal systems:

Condensers and Air Removal System
Natural Draft Cooling Towers
Open Cycle Cooling Water System

Reason for Scope Determination

The Circulating Water System does not meet 10 CFR 54.4(a)(1) because it is not a safety-related system that is relied upon to remain functional during and following design basis events. It meets 10 CFR 54.4(a)(2) because failure of nonsafety-related portions of the system could prevent satisfactory accomplishment of function(s) identified for 10 CFR 54.4(a)(1). It does not meet 10 CFR 54.4(a)(3) because the Circulating Water System is not relied upon in any safety analyses or plant evaluations to perform a function that demonstrates compliance with the NRC's regulation for Fire Protection (10 CFR 50.48), Environmental Qualification (10 CFR 50.49), Pressurized Thermal Shock (10 CFR 50.61), Anticipated Transient Without Scram

(10 CFR 50.62), or Station Blackout (10 CFR 50.63).

System Intended Functions

1. Resist nonsafety-related SSC failure that could prevent satisfactory accomplishment of a safety-related function. This system is required for functional support to provide condenser vacuum during a steam generator tube failure accident and the rod ejection accident and has the potential for spatial interaction with safety-related components in the Turbine Building. 10 CFR 54.4(a)(2)

UFSAR References

9.6.1
9.6.2
10.4.4

License Renewal Boundary Drawings

LR-302-132
LR-302-201
LR-302-202
LR-302-204

Table 2.3.3-3 **Circulating Water System**
Components Subject to Aging Management Review

Component Type	Intended Functions
Bolting	Mechanical Closure
Expansion Joints	None - Short Lived
Heat exchanger components (Lube Oil Heat Exchangers for Main Vacuum Pumps)	Heat Transfer
Heat exchanger components (Lube Oil Heat Exchangers for Main Vacuum Pumps)	Pressure Boundary
Heat exchanger components (Seal Water Coolers for Aux Vacuum Pumps)	Heat Transfer
Heat exchanger components (Seal Water Coolers for Aux Vacuum Pumps)	Pressure Boundary
Heat exchanger components (Seal Water Coolers for Main Vacuum Pumps)	Heat Transfer
Heat exchanger components (Seal Water Coolers for Main Vacuum Pumps)	Pressure Boundary
Piping and fittings	Pressure Boundary
Pump Casing (Circulating Water Pumps)	Pressure Boundary
Strainer Body	Leakage Boundary
Strainer Body	Pressure Boundary
Thermowell	Pressure Boundary
Valve Body	Pressure Boundary

The aging management review results for these components are provided in:

Table 3.3.2-3 Circulating Water System
Summary of Aging Management Evaluation

2.3.3.4 Closed Cycle Cooling Water System

System Purpose

The Closed Cycle Cooling Water (CCCW) System consists of the following plant systems: Nuclear Services Closed Cooling Water System, Intermediate Closed Cooling Water System, Decay Heat Closed Cooling Water System, Secondary Services Closed Cooling Water System, Industrial Cooler System, and Chemical Feed for Industrial Coolers System. The CCCW System is an auxiliary system designed to provide intermediate loop cooling for nuclear and non-nuclear plant loads. The CCCW System is in scope for License Renewal.

The CCCW System is mechanical and is designed to provide cooling water to both safety-related and nonsafety-related components.

The CCCW System accomplishes this purpose by circulating closed cooling water through the Nuclear Services Heat Exchangers, Intermediate Coolers, Decay Heat Service Coolers, Decay Heat Removal Coolers, Secondary Services Heat Exchangers, and Industrial Coolers and other safety-related and nonsafety-related plant heat exchangers and coolers.

System Operation

The Closed Cycle Cooling Water (CCCW) System is comprised of closed cooling water pumps, tanks, piping and components, heat exchangers and coolers, and instrumentation and control.

Containment isolation valves are incorporated in all cooling water lines penetrating the Reactor Building.

The CCCW System, except for the Industrial Coolers, consists of several closed-loop systems that accept heat from plant heat exchangers and coolers, and reject that heat to river water through other heat exchangers via the Open Cycle Cooling Water System. The Industrial Coolers reject heat directly to the outside air. The closed-loop systems have connected surge tanks and chemical mix tanks. Closed cooling water flow goes through the shell side of the river water heat exchangers and river water flows through the tube side of the coolers.

Nuclear Services Closed Cooling Water (NSCCW) satisfies the cooling requirements of nuclear oriented services. Nuclear services coolers serve the Spent Fuel Pool Coolers, Reactor Coolant Pump motor air and oil coolers, Reactor Coolant Pump Seal Return Coolers, Reactor Building Cooling Unit Fan Motor Coolers, Makeup Pumps and Motors, Waste Evaporator Condensers, Evaporator Distillate Coolers, and Evaporator Vacuum Pump Seal Water Coolers, Waste Gas Compressors, Steam Generator and Pressurizer Sample Coolers, Control Building air-conditioning, Emergency Feedwater, Spent Fuel Pump, and Nuclear Services and Decay Heat Closed Cooling Water pump room coolers and other area air coolers, and Steam Generator Hot Drain Coolers. NSCCW is normally pressurized by an instrument air supply at the surge tank to keep the piping inside containment for the Reactor Building Emergency Cooling fan motor cooling at greater than design containment pressure. This prevents the NSCCW system from being a potential leak path from containment during a LOCA.

The Intermediate Cooling System is designed to provide cooling water for components in the Reactor Building. Those components are the Letdown Coolers, Reactor Coolant Pump Thermal Barrier Heat Exchangers, Reactor Coolant Drain Tank Cooler, and Control Rod Drive

Cooling Coils. Filters are provided in the cooling water circuit to the control rod drives to prevent particulates from entering the drive cooling coils.

Decay Heat Closed Cooling Water circulates closed cycle cooling water through pumps and motors associated with the Decay Heat Closed Cooling Pumps, Decay Heat Removal Pumps and Motors, Reactor Building Spray Pumps and Motors, and Makeup and Purification Pumps and Motors.

Secondary Services Closed Cooling Water supplies nonsafety-related cooling requirements.

The Industrial Cooler System operates to remove heat from the water circulated through the Reactor Building Air Handling Units normal cooling coils, compartment cooling coils and the Intermediate Building Air Handling Unit that services the Intermediate Building. The Industrial Cooler System consists of two Industrial Coolers and associated pumps and piping. The Industrial Coolers are provided with chemical addition pumps and a chemical feed tank. The Industrial Coolers reject heat directly to the outside air through evaporation in an open cycle. The Industrial Cooler System may be used as a water source to manually fill the Fire Protection Systems kidney filter deluge water spray system tank.

For more detailed information, see UFSAR Section 9.6.

System Boundary

The Closed Cycle Cooling Water (CCCW) System boundary begins at the Nuclear Service Closed Cooling Water Pumps and continues through the surge tank and chemical mix tank and the following heat load flow paths:

- Control Building Air Conditioning
- Emergency Feedwater Pump Rooms and Instrument Air Compressor Room Ventilation
- Evaporator Condensers
- Evaporator Distillate Coolers
- Evaporator Vacuum Pump Seal Water Cooler
- Make-up and Purification Pump Motor Air and Pump Oil Coolers
- Nuclear Service and Decay Heat Cooling Pump Area Air Coolers
- Nuclear Services Heat Exchangers
- Pressurizer Sample Coolers
- Reactor Building Fan Motor Coolers
- Reactor Coolant Pump Seal Return Coolers
- Spent Fuel Pool Coolers and Spent Fuel Pump Room Cooling Coils
- Steam Generator Hot Drain Coolers
- Steam Generator Sample Coolers

The boundary includes piping through the make-up to Nuclear Service Surge Tank isolation valve and through the Reactor Building Emergency Coolers inlet check valve. The boundary also includes piping through the Control Building Chilled Water makeup isolation valve.

The CCCW boundary also begins at the Decay Heat Closed Cooling Pumps, and continues through the surge tanks and the following heat load flow paths:

- Decay Heat Closed Cooling Pumps Bearing Cooling
- Decay Heat Removal Coolers

- Decay Heat Removal Pumps Motor and Bearing Coolers
- Decay Heat Service Coolers
- Make-up and Purification Pump Motor and Bearing Coolers
- Pump cooling outlet connection points to the Decay Heat Removal Coolers
- Reactor Building Spray Pumps Motor and Bearing Coolers

The CCCW boundary also begins at the Intermediate Cooling Pumps, and continues through the surge tanks and chemical mix tanks, and the following heat load flowpaths:

- Control Rod Drive Cooling Coil
- Intermediate Coolers
- Letdown Coolers
- Reactor Coolant Drain Tank Heat Exchanger
- Reactor Coolant Pump Thermal Barrier heat exchanger cooling

The boundary includes the Intermediate Surge Tank makeup and Letdown Cooler drain isolation valves.

The CCCW boundary also begins at the Secondary Services Cooling Pump outlet common isolation valve, and the system continues through all heat loads serviced by Secondary Services Closed Cooling. The boundary also includes the Secondary Services Surge Tank. The Secondary Services Cooling Pumps, Secondary Services Chemical Addition Tank, and Secondary Services Heat Exchangers are not in scope because they are located in a section of the Turbine Building with no spatial interaction with safety-related equipment.

The CCCW boundary also includes the Industrial Cooler cooling water outlet connections and the system continues through the containment isolation valve, Reactor Building penetration, through the Reactor Building Air Handling Unit normal cooling coils and Reactor Compartment cooling coils, and ends at the supply connection to the Industrial Coolers. The system also includes the branch piping up to and through the Industrial Cooler Expansion Tank and up through the Reactor Building normal cooling water supply strainer. The system also includes the branch piping up to the supply and return connections on the Intermediate Building Air Handler Cooling Coils. The Industrial Coolers are not in scope because they are located on the Turbine Building roof and have no spatial interaction with safety-related equipment.

All associated piping, components and instrumentation contained within the flow path described above are included in the system evaluation boundary.

Also included in the CCCW License Renewal scoping boundary are those portions of nonsafety-related piping and equipment that extend beyond the safety-related/nonsafety-related interface up to the location of the first seismic anchor, or to a point no longer in proximity to equipment performing a safety-related function, whichever extends furthest. Included in this boundary are pressure retaining components relied upon to preserve the leakage boundary intended function of this portion of the system. For more information, refer to the License Renewal Boundary Drawing for identification of this boundary, shown in red.

Not included in the CCCW License Renewal scoping boundary are the following interfacing systems, which are separately evaluated as License Renewal systems:

Auxiliary and Fuel Handling Building Ventilation System
Condensate System

Control Building Ventilation System
Decay Heat Removal System
Feedwater System
Instrument and Control Air System
Intermediate Building Ventilation System
Main Generator and Auxiliary System
Makeup and Purification System
Open Cycle Cooling Water System
Primary Containment Heating and Ventilation System
Reactor Building Spray System
Reactor Coolant System
Service Building Chilled Water System
Spent Fuel Cooling System
Water Treatment and Distribution System

Reason for Scope Determination

The Closed Cycle Cooling Water System meets 10 CFR 54.4(a)(1) because it is a safety-related system that is relied upon to remain functional during and following design basis events. It meets 10 CFR 54.4(a)(2) because failure of nonsafety-related portions of the system could prevent satisfactory accomplishment of function(s) identified for 10 CFR 54.4(a)(1). It also meets 10 CFR 54.4(a)(3) because the Closed Cycle Cooling Water System is relied upon to perform a function that demonstrates compliance with the Commission's regulation for Fire Protection (10 CFR 50.48) and Environmental Qualification (10 CFR 50.49). The Closed Cycle Cooling Water System is not relied upon in any safety analyses or plant evaluations to perform a function that demonstrates compliance with the Commission's regulation for Pressurized Thermal Shock (10 CFR 50.61), Anticipated Transient Without Scram (10 CFR 50.62), or Station Blackout (10 CFR 50.63).

System Intended Functions

1. Provide heat removal from safety-related equipment. CCCW provides heat removal from Decay Heat Coolers, Spent Fuel Coolers, and other safety-related heat exchangers and coolers. 10 CFR 54.4(a)(1)
2. Provide primary containment boundary. Nuclear Services, Decay Service, Industrial Cooler and Intermediate Service all penetrate containment and have containment isolation valves in the lines. 10 CFR 54.4(a)(1)
3. Sense process conditions and generate signals for reactor trip or engineered safety features actuation. Radiation monitors on the closed cycle systems sense fluid radiation levels. 10 CFR 54.4(a)(1)
4. Resist nonsafety-related SSC failure that could prevent satisfactory accomplishment of a safety-related function. The CCCW System contains nonsafety-related water filled lines which have the potential for spatial interactions (spray or leakage) with safety-related SSCs. 10 CFR 54.4(a)(2)
5. Relied upon in safety analyses or plant evaluations to perform a function that demonstrates compliance with the commission's regulations for Fire Protection (10 CFR 50.48). Nuclear Services Closed Cooling, Intermediate Cooling, and Decay Heat Service Closed Cooling are credited for Fire Protection by providing cooling to Makeup and Purification and Decay Heat Removal Pumps, Letdown Coolers, and RC Coolers for thermal barrier protection. 10 CFR 54.4(a)(3)

6. Relied upon in safety analyses or plant evaluations to perform a function that demonstrates compliance with the commission's regulations for Environmental Qualification (10 CFR 50.49). Nuclear Services Closed Cooling and Intermediate Cooling containment isolation valves are credited for Equipment Qualification. 10 CFR 54.4(a)(3)

UFSAR References

9.6.2.3
9.3
9.6.2.5
9.6.2.2
9.9.4.1.d
5.6.4

License Renewal Boundary Drawings

LR-302-113
LR-302-172
LR-302-175
LR-302-181
LR-302-221
LR-302-610
LR-302-611
LR-302-620
LR-302-645
LR-302-650
LR-302-652
LR-302-662
LR-302-844
LR-302-845
LR-302-846

Table 2.3.3-4 Closed Cycle Cooling Water System
Components Subject to Aging Management Review

Component Type	Intended Functions
Annubar	Pressure Boundary
Bolting	Mechanical Closure
Filter Housing	Pressure Boundary
Flow Element	Leakage Boundary
Flow Element	Pressure Boundary
Heat exchanger components (Auxiliary Boiler Sample Rack Coolers)	Leakage Boundary
Heat exchanger components (Condensate Booster Pump Oil Cooler)	Leakage Boundary
Heat exchanger components (Condensate Pump Motor Oil Cooler)	Leakage Boundary
Heat exchanger components (Control Building Air Conditioning)	Leakage Boundary
Heat exchanger components (Control Rod Drive Cooling Coils)	Heat Transfer
Heat exchanger components (Control Rod Drive Cooling Coils)	Pressure Boundary
Heat exchanger components (Decay Heat Removal Coolers)	Heat Transfer
Heat exchanger components (Decay Heat Removal Coolers)	Pressure Boundary
Heat exchanger components (EFW Pump Rooms and Instr Air Comp Room Coolers)	Heat Transfer
Heat exchanger components (EFW Pump Rooms and Instr Air Comp Room Coolers)	Pressure Boundary
Heat exchanger components (EHC Cooler)	Leakage Boundary
Heat exchanger components (Evaporator Condensers)	Leakage Boundary
Heat exchanger components (Evaporator Distillate Coolers)	Leakage Boundary
Heat exchanger components (Evaporator Vacuum Pump Seal Water Coolers)	Leakage Boundary
Heat exchanger components (Exciter Air Cooler)	Leakage Boundary
Heat exchanger components (Feedpump Turbine Lube Oil Cooler)	Leakage Boundary
Heat exchanger components (Hydrogen Coolers)	Leakage Boundary
Heat exchanger components (Instrument Air Aftercooler)	Leakage Boundary
Heat exchanger components (Leak Rate Test Aftercooler)	Leakage Boundary

Heat exchanger components (Letdown Coolers)	Heat Transfer
Heat exchanger components (Letdown Coolers)	Pressure Boundary
Heat exchanger components (Main Turbine Oil Cooler)	Leakage Boundary
Heat exchanger components (Makeup, Decay Heat Removal, RB Spray Pump & Motor Lube Oil Cooler)	Heat Transfer
Heat exchanger components (Makeup, Decay Heat Removal, RB Spray Pump & Motor Lube Oil Cooler)	Pressure Boundary
Heat exchanger components (Nuclear Service and Decay Heat Cooling Pump Area Air Coolers)	Heat Transfer
Heat exchanger components (Nuclear Service and Decay Heat Cooling Pump Area Air Coolers)	Pressure Boundary
Heat exchanger components (Pressurizer Sample and OTSG Sample Coolers)	Leakage Boundary
Heat exchanger components (Primary and Secondary Cooling Coils)	Leakage Boundary
Heat exchanger components (Primary Sample Coolers)	Leakage Boundary
Heat exchanger components (RC Pump Seal Return Coolers)	Heat Transfer
Heat exchanger components (RC Pump Seal Return Coolers)	Pressure Boundary
Heat exchanger components (Reactor Building Fan Motor Coolers)	Heat Transfer
Heat exchanger components (Reactor Building Fan Motor Coolers)	Pressure Boundary
Heat exchanger components (Reactor Coolant Drain Tank Heat Exchanger)	Heat Transfer
Heat exchanger components (Reactor Coolant Drain Tank Heat Exchanger)	Pressure Boundary
Heat exchanger components (Service Air Aftercooler)	Leakage Boundary
Heat exchanger components (Spent Fuel Coolers)	Heat Transfer
Heat exchanger components (Spent Fuel Coolers)	Pressure Boundary
Heat exchanger components (Spent Fuel Pump Room Cooling Coils)	Heat Transfer
Heat exchanger components (Spent Fuel Pump Room Cooling Coils)	Pressure Boundary

Heat exchanger components (Stator Water Cooling)	Leakage Boundary
Heat exchanger components (Steam Generator Hot Drain Coolers)	Leakage Boundary
Piping and fittings	Leakage Boundary
Piping and fittings	Pressure Boundary
Pump Casing (Decay Heat Closed Cooling)	Pressure Boundary
Pump Casing (Industrial Cooler Water)	Leakage Boundary
Pump Casing (Intermediate Cooling)	Pressure Boundary
Pump Casing (Nuclear Services Closed Cooling)	Pressure Boundary
Tanks (Chemical Mix - Nuclear Service, Intermediate Cooling, Decay Closed, Industrial Cooler)	Leakage Boundary
Tanks (Industrial Cooler Expansion Tank)	Leakage Boundary
Tanks (Surge - Nuclear Service, Intermediate Cooling, Decay Closed, Secondary Closed)	Leakage Boundary
Tanks (Surge - Nuclear Service, Intermediate Cooling, Decay Closed, Secondary Closed)	Pressure Boundary
Thermowell	Pressure Boundary
Valve Body	Leakage Boundary
Valve Body	Pressure Boundary

The aging management review results for these components are provided in:

Table 3.3.2-4 Closed Cycle Cooling Water System Summary of Aging Management Evaluation

2.3.3.5 Containment Isolation System

System Purpose

The Containment Isolation (CI) System is comprised of those plant systems that are in scope for License Renewal only to perform primary containment isolation. The CI System consists of the following plant systems: Penetration Pressurization System, Reactor Building Isolation System, Containment Leak Rate Testing, Steam Generator Chemical Cleaning System, Reactor Building Purge & Kidney System, Nuclear Plant Nitrogen Supply, Post LOCA Hydrogen Recombiner System, and Hydrogen Purge Discharge System.

The CI System is in scope for License Renewal. However, portions of the CI System are not required to perform intended functions and are not in scope. The purpose of the CI System is to provide containment isolation. The system accomplishes this purpose by providing a double barrier so that no single, credible failure or malfunction of an active component can result in loss of isolation or intolerable leakage. The installed double barriers include piping systems and isolation valves.

System Operation

The CI System is comprised of piping and isolation valves. Piping systems performing containment isolation include piping with isolation valves both inside and outside containment, piping with double isolation valves outside containment, and cut and capped pipe inside containment. The isolation valves are either normally closed or close on an Engineered Safeguards signal.

System Boundary

The CI System boundary includes piping, ductwork, isolation valves, and capped pipe associated with Penetration Pressurization System, Reactor Building Isolation System, Containment Leak Rate Testing, Steam Generator Chemical Cleaning System, Reactor Building Purge & Kidney System, Nuclear Plant Nitrogen Supply, Post LOCA Hydrogen Recombiner System, and Hydrogen Purge Discharge System.

Reason for Scope Determination

The Containment Isolation System meets 10 CFR 54.4(a)(1) because it is a safety-related system that is relied upon to remain functional during and following design basis events. The Containment Isolation System is in scope under 10 CFR 54.4(a)(2) because failure of nonsafety-related portions of the system would prevent satisfactory accomplishment of function(s) identified for 10 CFR 54.4(a)(1). It also meets 10 CFR 54.4(a)(3) because it is relied upon in the safety analyses or plant evaluations to perform a function that demonstrates compliance with the Commission's regulations for Environmental Qualification (10 CFR 50.49). The Containment Isolation System is not relied upon in any safety analyses or plant evaluations to perform a function that demonstrates compliance with the Commission's regulation for Fire Protection (10 CFR 50.48), Pressurized Thermal Shock (10 CFR 50.61), Anticipated Transient Without Scram (10 CFR 50.62) or Station Blackout (10 CFR 50.63).

System Intended Functions

1. Provide primary containment boundary. Provide a double barrier so that no single, credible

failure or malfunction of an active component can result in loss of isolation or intolerable leakage. 10 CFR 54.4(a)(1)
2. Resist nonsafety-related SSC failure that could prevent satisfactory accomplishment of a safety related function. The CI System contains nonsafety-related components that provide structural support for safety-related components. 10 CFR 54.4(a)(2)
3. Relied upon in safety analyses or plant evaluations to perform a function that demonstrates compliance with the commission's regulations for Environmental Qualification (10 CFR 50.49). 10 CFR 54.4(a)(3)

UFSAR References

5.0
5.1.1
5.2.1.2.1.c
5.3.3
5.3.5.1
5.6.3
5.6.5
6.0
9.10.2

License Renewal Boundary Drawings

LR-302-196
LR-302-706
LR-302-720
LR-302-721
LR-302-722
LR-302-725
LR-302-831

Table 2.3.3-5 **Containment Isolation System**
Components Subject to Aging Management Review

Component Type	Intended Functions
Bolting	Mechanical Closure
Ducting and Components	Pressure Boundary
Piping and fittings	Pressure Boundary
Piping and fittings	Structural Support
Valve Body	Pressure Boundary

The aging management review results for these components are provided in:

Table 3.3.2-5 Containment Isolation System
Summary of Aging Management Evaluation

2.3.3.6 Control Building Ventilation System

System Purpose

The Control Building Ventilation (CBV) System consists of the following plant systems: Control Building & Machine Shop Heating and Ventilation (CBMSHV) System, Control Building Chilled Water System, Control Building Compressed Air System, and the Air Intake Tunnel (Non-Structural) System. The CBV System is in scope for License Renewal and is designed to provide filtered, tempered air to the Control Building.

The purpose of the CBV System is to provide filtered, tempered air to both safety-related and nonsafety-related areas of the Control Building. The CBV System accomplishes this purpose by supplying both outside air from the Air Intake Tunnel and recirculated air to rooms and areas within the Control Building.

The CBV System ventilation runs continuously. During normal operation, the CBV System supplies a mixture of outside air and recirculated air to the Control Building. If one or more of the hazards in the outside air intake tunnel, such as smoke or combustible gasses, is detected or an abnormally high radiation level in the Control Room is detected following the occurrence of a design basis accident in the Reactor Building that results in an engineered safeguard signal, the system is automatically placed into emergency recirculation mode.

The Control Building Chilled Water System is normally in operation. It supplies cooling for the CBV System ventilation coolers and the penetration air coolers.

Also included in the CBV System is a dedicated compressed gas system, which provides control air and maintains necessary air pressure to operate chilled water valves and CBV air operated dampers.

System Operation

Control Building & Machine Shop Heating and Ventilation System

The CBMSHV System consists of two independent, 100 percent capacity trains sharing common ductwork. Each train is comprised of air coolers, fans, dampers, filter banks, ductwork and fittings, and instrumentation and control.

The CBMSHV System draws air from the air intake tunnel. The air is filtered, conditioned, and supplied to rooms and areas within the Control Building via the Normal Duty Supply Fans. If the Normal Duty Supply Fans fail to operate or are otherwise unavailable, the Emergency Duty Supply Fans are used. The configuration of the ventilation system is such that the air can be discharged to the atmosphere or recirculated. During normal operation, outside air is mixed with return air.

During emergency recirculation mode, the Control Building Envelope is isolated and the air is recirculated through roughing, HEPA filters, and charcoal absorbers to remove airborne radioactivity and to maintain a positive pressure. The envelope includes the second, third, fourth, and fifth floors of the Control Building. The first floor of the Control Building is exhausted to the Auxiliary Building.

Control Building Chilled Water System

The Control Building chilled water subsystem is comprised of piping and fittings, valves, pumps, tanks, cooling coils, and instrumentation and control.

The Control Building Chilled Water System is comprised of two 100 percent capacity trains. The Control Building chilled water is cooled via the Control Building Chillers. The heat load from the chilled water is removed via the Closed Cycle Cooling Water System.

The chilled water is circulated via pumps through the Control Building ventilation subsystem cooling coils and the Penetration Air Coolers. Makeup is provided by the Closed Cycle Cooling Water System.

Control Building Compressed Air System

The Control Building Compressed Air System is comprised of two redundant compressors, air dryers, filters, piping and fittings, valves, and instrumentation. The Control Building Compressed Air System supplies control air and maintains necessary air pressure to operate chilled water valves and CBV air operated dampers.

Air Intake Tunnel (Non-Structural) System

The Air Intake Tunnel (Non-Structural) System is comprised of monitors and detectors that provide conditions within the Air Intake Tunnel.

For more detailed information, see UFSAR Sections 5.1.1, 7.4.5, & 9.8.1.

System Boundary

The CBV System ventilation boundary begins at the Air Intake Tunnel. The system continues through filter banks, normal and emergency supply fans, booster fans, and electric heaters to safety related rooms within the Control Building, including the Control Room. The system continues through exhaust and return fans and ends at the control building exhaust.

The CBV System chilled water boundary begins at the outlets to the Control Building Chillers. The system continues to an expansion tank, through the cooling coils of the Penetration Air Coolers and Control Building Air Coolers, and through the chilled water supply pumps. The boundary ends at the inlets to the Control Building Chillers. The Penetration Air Coolers are evaluated with the Primary Containment Heating and Ventilation System.

The CBV Compressed air system begins at the two redundant compressors, air dryers, and filters and continues through the associated piping, and ends at the air operated CBV dampers and chilled water valves.

Not included in the CBV System scoping boundary is the Air Intake Tunnel, which is evaluated with the Air Intake Structure.

Not included in the CBV System scoping boundary are the Control Building Chillers, which are evaluated with the Closed Cycle Cooling Water System.

Not included in the CBV System scoping boundary is the service water piping to the charcoal

filter housing deluge system, which is evaluated with the Fire Protection System.

Also included in the License Renewal scoping boundary of the CBVS are those portions of nonsafety-related piping and equipment that extend beyond the safety-related/nonsafetly-related interface up to the location of the first seismic anchor, or to a point no longer in proximity to equipment performing a safety-related function, whichever extends furthest. This includes the nonsafety-related portions of the system located in the Control Building. Included in this boundary are pressure-retaining components relied upon to preserve the leakage boundary intended function of this portion of the system. For more information, refer to the License Renewal Boundary Drawing for identification of this boundary, as shown in red.

Not included in the CBV System scoping boundary are the following interfacing systems, which are separately evaluated as license renewal systems:

Closed Cycle Cooling Water System
Fire Protection System
Primary Containment Heating and Ventilation System

Reason for Scope Determination

The Control Building Ventilation System meets 10 CFR 54.4(a)(1) because it is a safety-related system that is relied upon to remain functional during and following design basis events. It meets 10CFR54.4(a)(2) because failure of nonsafety-related portions of the system could prevent satisfactory accomplishment of function(s) identified for 10CFR54.4(a)(1). It also meets 10 CFR 54.4(a)(3) because it is relied upon in the safety analyses or plant evaluations to perform a function that demonstrates compliance with the Commission's regulations for Fire Protection (10 CFR 50.48) and Station Blackout (10 CFR 50.63). The Control Building Ventilation Systems is not relied upon in any safety analyses or plant evaluations to perform a function that demonstrates compliance with the Commission's regulation for Environmental Qualification (10 CFR 50.49), Pressurized Thermal Shock (10 CFR 50.61), or Anticipated Transient Without Scram (10 CFR 50.62).

System Intended Functions

1. Provide centralized area for control and monitoring of nuclear safety-related equipment. Maintains control room habitability. 10 CFR 54.4(a)(1)
2. Maintain emergency temperature limits within areas containing safety-related components. Provides tempered, cooled air to rooms and areas inside the Control Building that house safety-related equipment. 10 CFR 54.4(a)(1)
3. Provide heat removal from safety-related equipment. The Control Building chilled water provides heat removal for the Control Building ventilation. 10 CFR 54.4(a)(1)
4. Resist nonsafety-related SSC failure that could prevent satisfactory accomplishment of a safety related function. The CBVS contains nonsafety-related water filled lines in the Control building that have potential for spatial interactions (spray or leakage) with safety-related SSC's. 10 CFR 54.4(a)(2)
5. Relied upon in safety analyses or plant evaluations to perform a function that demonstrates compliance with the Commission's regulations for Fire Protection (10 CFR 50.48). Equipment relied upon to meet Appendix R requirements. 10 CFR 54.4(a)(3)
6. Relied upon in safety analyses or plant evaluations to perform a function that demonstrates compliance with the Commission's regulations for Station Blackout (10 CFR 50.63). Maintain

temperature within NUMARC limits for the SBO coping duration. 10 CFR 54.4(a)(3)

UFSAR References

5.1.1
7.4.5
9.8.1
Appendix 14C

License Renewal Boundary Drawings

LR-302-610
LR-302-708
LR-302-831
LR-302-842 Sh. 1
LR-302-842 Sh. 2
LR-302-842 Sh. 3
LR-302-847
LR-302-850

Table 2.3.3-6 Control Building Ventilation System
Components Subject to Aging Management Review

Component Type	Intended Functions
Bolting	Mechanical Closure
Damper Housing	Pressure Boundary
Ducting and Components	Pressure Boundary
Expansion Joints	Pressure Boundary
Fan Housing	Pressure Boundary
Fan Housing	Structural Support
Filter Housing	Pressure Boundary
Heat exchanger components (Air Dryer)	Pressure Boundary
Heat exchanger components (Cooling Coils)	Heat Transfer
Heat exchanger components (Cooling Coils)	Pressure Boundary
Piping and fittings	Leakage Boundary
Piping and fittings	Pressure Boundary
Pump Casing	Pressure Boundary
Restricting Orifices	Pressure Boundary
Restricting Orifices	Throttle
Sight Glasses	Pressure Boundary
Strainer Body	Pressure Boundary
Strainer Element	Filter
Tanks	Pressure Boundary
Valve Body	Pressure Boundary

The aging management review results for these components are provided in:

Table 3.3.2-6 Control Building Ventilation System
Summary of Aging Management Evaluation

2.3.3.7 Cranes and Hoists

System Purpose

The Cranes and Hoists (CH) System consists of Cranes and Material Handling Equipment, Turbine Building Crane, Reactor Building Polar Crane, Fuel Handling Building Crane, and River Pump Service Crane Bridge.

The purpose of the CH System is to safely move material and equipment as required to support operations and maintenance activities.

The Cranes and Hoists System is comprised of load handling overhead bridge cranes, monorails, jib cranes, lifting devices, and hoists provided throughout the facility to support operation and maintenance activities. The system includes, but is not limited to, cranes and hoists required to comply with the requirements of NUREG-0612, Control of Heavy Loads, and hoists for handling light loads. Major cranes include the Reactor Building Polar Crane, Fuel Handling Building Crane, and River Pump Service Bridge Crane.

The Reactor Building Polar Crane services the operating floor and is used to lift all heavy loads such as the reactor closure head. The Fuel Handling Building Crane is used to handle new and spent fuel. The River Pump Service Bridge crane services the river water pumps in the Intake Screen and Pump House. The Reactor Building Polar Crane, Fuel Handling Building Crane, and River Pump Service Bridge Crane are classified as nonsafety-related, designed to Seismic Class I criteria.

Included in the evaluation boundary of Cranes and Hoists System are load handling systems in various areas of the facility. Cranes and hoists that are in the scope of NUREG-0612 are in the scope of License Renewal, which are the Reactor Building Polar Crane and the Fuel Handling Building Crane. Other cranes and hoists that are not in the scope of NUREG-0612 but travel in the vicinity of safety-related systems, structures, and components (SSCs) are also in the scope of License Renewal, if it is determined that their failure could impact a safety-related function. As a result, the Reactor Building Polar Crane, Fuel Handling Building Crane, Turbine Building Crane, River Pump Service Bridge Crane, Reactor Carriage Hoist, Pool Carriage Hoist, Make-up Filter Replacement Hoist, Feedwater Pump Hoist, Monorail and Hoist above Intermediate Building 355', Head Stand Jib Crane, Reactor Pool Jib Crane, Incore Area Jib Crane, Reactor Building Basement Jib Crane, Reactor Building D-Ring Jib Cranes, Reactor Building Operating Floor Jib Crane, River Water Pumphouse Hoist, and Hoist on Monorail at Equipment Hatch are in the scope of License Renewal. The boundary for the Cranes and Hoists System is limited to load bearing structural components such as, the bridge, the trolley, rail system (rails, rail clips, and rail fasteners), structural bolts, lifting devices, monorail beams, and jib crane structural members.

Cranes and Hoists that are determined not to be in the scope of License Renewal are Sky Climber, FIN Team Area Monorail Hoist, Circ Water Pump House Crane, Electric Shop Hoists, Chemical Addition Room Hoist, Trash Pit Hoist, WDS Jib Crane, Auxiliary Building Door/Loading Dock Jib Crane, Boric Acid Mix Tank Hoist, Circulating Water Chlorine Building Hoist, Outage Support Fabrication Shop Crane, River Water Chlorine Tank Room Hoist, Screen House Entrance Jib Crane, WHPF Area Cranes, Staging/Packaging Area Crane, Disassembly Area Crane, Turbine Building OOB Jib Crane, Turbine Building Switchgear Room Crane, I&C Shop Hoist, Unit 2 Circulating Water House Hoist, Hot Machine Shop Monorail,

Chemical Cleaning Building Hoist, SBO Diesel Hoist, Control Building Patio Hoist, Turbine Building Powdex Hoist, Unit 2 Diesel Hoists, and Machine Shop Cranes. Failure of these cranes and hoists will not impact a safety-related intended function. Personnel Lifts, Pump Up Hydraulic Lifts, Two-man and One-man Lifts are portable equipment and are not in scope for License Renewal.

Not included in the evaluation boundary of Cranes and Hoists are the refueling bridges, fuel transfer carriage hoist, overhead crane structural support steel, and crane runway girders. The refueling bridges and the fuel transfer carriage hoist are separately evaluated with the Fuel Handling and Fuel Storage (FHS) System. The structural support steel and runway girders are included with the structure serviced by the crane.

For more detailed information, refer to UFSAR Sections 5.2.1.2.12 and 9.7.1.6.

System Operation

Not required.

System Boundary

Not required.

Reason for Scope Determination

The Cranes and Hoists System is not in scope under 10 CFR 54.4(a)(1) because no portions of the system are safety-related or relied upon to remain functional during and following design basis events. It meets 10 CFR 54.4(a)(2) because failure of nonsafety-related portions of the system could prevent satisfactory accomplishment of function(s) identified for 10 CFR 54.4(a)(1). It does not meet 10 CFR 54.4(a)(3) because the Cranes and Hoists System is not relied upon in any safety analyses or plant evaluations to perform a function that demonstrates compliance with the Commission's regulation for Fire Protection (10 CFR 50.48), Environmental Qualification (10 CFR 50.49), Pressurized Thermal Shock (10 CFR 50.61), Anticipated Transient Without Scram (10 CFR 50.62), or Station Blackout (10 CFR 50.63).

System Intended Functions

1. Provides a safe means for handling safety-related components and loads above or near safety-related components. The Reactor Building Polar Crane, Fuel Handling Building Crane, River Pump Service Bridge Crane and other non safety-related cranes handle loads above safety-related components. 10 CFR 54.4(a)(2)

UFSAR References

5.2.1.2.12
9.7.1.6

License Renewal Boundary Drawings

None

Table 2.3.3-7 **Cranes and Hoists**
Components Subject to Aging Management Review

Component Type	Intended Functions
Bolting	Structural Support
Crane/Hoist (Bridge/Trolley/Girders)	Structural Support
Crane/Hoist (Jib Crane Columns/Beams/Plates/Anchorage)	Structural Support
Crane/Hoist (Monorail Beams/Lifting Devices/Plates)	Structural Support
Crane/Hoist (Rail System)	Structural Support

The aging management review results for these components are provided in:

Table 3.3.2-7 Cranes and Hoists
Summary of Aging Management Evaluation

2.3.3.8 Diesel Generator Building Ventilation System

System Purpose

The Diesel Generator Building Ventilation (DGBV) System is in scope for License Renewal and is designed to provide filtered, tempered air to the Diesel Generator Building and the SBO Diesel Generator Building. The purpose of the DGBV System is to remove heat generated by the diesel engines and other heat generating components within the Diesel Generator Building and the SBO Diesel Generator Building and to maintain a controlled environment for personnel and operating equipment during all modes of operation. The DGBV System accomplishes this purpose by supplying both outside air and recirculated air to rooms within the Diesel Generator Building and the SBO Diesel Generator Building. The DGBV System is normally in operation.

System Operation

The DGBV System consists of an air handling unit, electric heaters, fans, filters, dampers, and associated ductwork and controls.

The DGBV System draws outside air and provides it to rooms within the Diesel Generator Building. The system is started manually in the Control Room and operates continuously during all modes of operation. Depending upon the room temperature, room air is either recirculated or discharged to atmosphere. The Diesel Generator Building Ventilation Fans are required to maintain room temperature below the design temperature to support the diesel generator design safety functions. The system also provides combustion air to the diesel engines.

Separate DGBV System fans draw outside air and provide it to rooms within the SBO Diesel Generator Building. The system also provides combustion air to the diesel engine and is normally in operation.

System Boundary

The DGBV System begins at the outside air inlets of the Diesel Generator Building and the SBO Diesel Generator Building. The system continues through air handling units, fans, and ductwork throughout the Diesel Generator Building and SBO Diesel Generator Building. The system ends at the exhaust outlet of the buildings.

Not included in the DGBV System scoping boundary are the following interfacing systems, which are separately evaluated as license renewal systems:

Emergency Diesel Generators and Auxiliary Systems
Instrument and Control Air System
Station Blackout Diesel Generator & Support Systems

Reason for Scope Determination

The Diesel Generator Building Ventilation System meets 10 CFR 54.4(a)(1) because it is a safety-related system that is relied upon to remain functional during and following design basis events. The Diesel Generator Building Ventilation System is not in scope under 10 CFR 54.4(a)(2) because failure of nonsafety-related portions of the system would not prevent

satisfactory accomplishment of function(s) identified for 10 CFR 54.4(a)(1). It also meets 10 CFR 54.4(a)(3) because it is relied upon in the safety analyses or plant evaluations to perform a function that demonstrates compliance with the Commission's regulations for Fire Protection (10 CFR 50.48) and Station Blackout (10 CFR 50.63). The Diesel Generator Building Ventilation Systems is not relied upon in any safety analyses or plant evaluations to perform a function that demonstrates compliance with the Commission's regulation for Environmental Qualification (10 CFR 50.49), Pressurized Thermal Shock (10 CFR 50.61), Anticipated Transient Without Scram (10 CFR 50.62).

System Intended Functions

1. Maintain emergency temperature limits within areas containing safety-related components. Provides tempered, cooled air to rooms and areas inside the Diesel Generator Building that house safety-related equipment. 10 CFR 54.4(a)(1)
2. Relied upon in safety analyses or plant evaluations to perform a function that demonstrates compliance with the Commission's regulations for Fire Protection (10 CFR 50.48). The DGBV System contains fire dampers, which are required to function. 10 CFR 54.4(a)(3)
3. Relied upon in safety analyses or plant evaluations to perform a function that demonstrates compliance with the Commission's regulations for Station Blackout (10 CFR 50.63). The DGBV System provides combustion air to the SBO Diesel Engine. 10 CFR 54.4(a)(3)

UFSAR References

5.1.1
9.8.7

License Renewal Boundary Drawings

LR-302-844
LR-302-881

Table 2.3.3-8 Diesel Generator Building Ventilation System Components Subject to Aging Management Review

Component Type	Intended Functions
Bolting	Mechanical Closure
Damper Housing	Pressure Boundary
Ducting and Components	Pressure Boundary
Expansion Joints	Pressure Boundary
Fan Housing	Pressure Boundary
Filter Housing	Pressure Boundary

The aging management review results for these components are provided in:

Table 3.3.2-8 Diesel Generator Building Ventilation System Summary of Aging Management Evaluation

2.3.3.9 Emergency Diesel Generators and Auxiliary Systems

System Purpose

The Emergency Diesel Generators and Auxiliary Systems (EDGA) consist of the following plant systems: Emergency Diesel Generators (Mechanical Aspects), Emergency Diesel Generator Fuel Systems and Emergency Diesel Generator Support Systems. The EDGA Systems are auxiliary systems designed to supply electrical power to key plant components when normal offsite power sources are not available. The EDGA Systems are in scope for License Renewal.

The EDGA Systems are standby mechanical systems designed to provide the motive force for generating electrical power for key plant components during events when normal offsite power sources are not available.

The EDGA Systems accomplish this purpose by utilizing diesel engines to rotate electric generators attached to the diesel engines. Fuel supply, air supply, and cooling water piping and components support Emergency Diesel engine operation.

Each diesel engine will be automatically started upon the occurrence of either initiation of safety injection operation, overpressure in the Reactor Building, or loss of voltage or degraded bus voltage on the 4160 V engineered safeguards bus.

System Operation

The Emergency Diesel Generators and Auxiliary Systems (EDGA) consist of two (2) Emergency Diesel Generators, fuel tanks and pumps and compressors, piping, piping and components, heat exchangers, and instrumentation and control. The Emergency Diesel Generators supply power to 4160V Emergency busses. The generators are evaluated with the 4160 V Auxiliary Power System.

Each of the two Emergency Diesels is cooled by air-cooled and liquid-cooled heat exchangers. Diesel engine air cooling is a closed-cycle loop which circulates cooling water from a pump, through the diesel engine air cooler, through the Air Cooler Coolant Radiator, and back to the pump. Diesel engine jacket cooling is a closed-cycle loop which circulates cooling water from the diesel engine jacket, through the Jacket Coolant Radiator, Lube Oil Cooler, a pump, and back to the diesel engine jacket. The closed loops include an expansion tank, coolant drain tank, interconnecting piping between the two closed-cycle loops, a stand-by lube oil heat exchanger, an electric stand-by heater, and a stand-by pump. A branch flowpath provides cooling water to the Gear Box Lube Oil Cooler.

The Emergency Diesels are lubricated by a closed-cycle lube oil system. Lube oil is pumped from the engine through a filter, the Lube Oil Cooler, a strainer, and back to the engine. A stand-by lube oil heater is also included in the loop, as is a Hand Priming Pump. Lube oil is also supplied to the engine turbochargers and blowers. The gear box also has a lube oil loop which includes a pump and Gear Box Lube Oil Cooler. Cooling water for the Lube Oil Cooler and Gear Box Lube Oil Cooler is provided by the jacket and air cooling coolant loops.

The Emergency Diesel fuel supply components consist of a single 30,000-gallon Diesel Fuel Storage Tank, and a fuel transfer pump and a 550-gallon Diesel Fuel Day Tank, engine-driven and DC-driven fuel pumps, and piping, filters, and strainers for each engine. Each engine also

has a Dirty Fuel Drain Tank. The Fuel Oil System supplies the 30,000-gallon Diesel Fuel Storage Tank.

The Emergency Diesel air supply system consists of air compressors, air receivers, strainers and piping. This air supply system supplies diesel engine starting air. Combustion exhaust is expelled from the engine through piping, an expansion joint, an exhaust muffler, and vents to the atmosphere. Combustion air is supplied to the engines through the Diesel Generator Building Ventilation System.

For more detailed information, see UFSAR Sections 8.2.3.

System Boundary

The Emergency Diesel air cooler coolant boundary begins at the engine air cooler outlets. The system continues through the Air Cooler Coolant Pump, through the Air Cooler Coolant Radiators, and back to the engine air coolers. The Emergency Diesel jacket coolant boundary begins at the engine jacket outlets. The system continues through the Jacket Coolant Pump, through the Jacket Coolant Radiators and back to the engine jacket coolant inlet connections. The boundary also includes the branch piping between the air cooling coolant and jacket coolant loops, the expansion tank, the Stand-by Heat Exchanger, the Lube Oil Cooler, Coolant Drain Tank, Gear Box Lube Oil Cooler and Stand-by Coolant Pump.

The Emergency Diesel lube oil boundary begins at the engine lube oil outlet connection, and the system continues through the pump, filter, Lube Oil Cooler, strainer and back to the engine. The boundary also includes the Hand Priming Pump, the Stand-by Heat Exchanger, Standby Circulating Pump, and associated piping.

The Emergency Diesel fuel boundary begins at the 30,000 gallon diesel fuel storage tank and the system continues through strainers, fuel transfer pumps, the 550 gallon day tanks, through the fuel supply pumps, up to the engine. The boundary also includes the dirty fuel drain tanks, the connected piping and the day tank vent piping.

The Emergency Diesel starting air boundary begins at the air compressors. The system continues through the air receivers, strainers and through the Emergency Diesel engine starting air piping network. The boundary also includes the exhaust pathway from the engine through piping, expansion joints, exhaust mufflers and vents to the atmosphere.

All associated piping, components and instrumentation contained within the flow path described above are included in the system evaluation boundary.

Not evaluated in the scoping boundary is the combustion air for the diesel engines, which is evaluated with the Diesel Generator Building Ventilation System. Also not evaluated in the scoping boundary is the generators and connected electrical components, which are evaluated with the 4160 V Auxiliary Power System.

Not included in the EDGA System License Renewal scoping boundary are the following interfacing systems, which are separately evaluated as License Renewal systems:

4160 V Auxiliary System
Diesel Generator Building Ventilation System
Fuel Oil System

Reason for Scope Determination

The Emergency Diesel Generators and Auxiliary Systems meet 10 CFR 54.4(a)(1) because they are safety-related systems that are relied upon to remain functional during and following design basis events. The Emergency Diesel Generators and Auxiliary Systems are not in scope under 10 CFR 54.4(a)(2) because failure of nonsafety-related portions of the systems would not prevent satisfactory accomplishment of function(s) identified for 10 CFR 54.4(a)(1). The Emergency Diesel Generators and Auxiliary Systems meet 10 CFR 54.4(a)(3) because they are relied upon to perform a function that demonstrates compliance with the Commission's regulation for Fire Protection (10 CFR 50.48). The Emergency Diesel Generators and Auxiliary Systems are not relied upon in any safety analyses or plant evaluations to perform a function that demonstrates compliance with the Commission's regulation for Anticipated Transient Without Scram (10 CFR 50.62), Environmental Qualification (10 CFR 50.49), Station Blackout (10 CFR 50.63), or Pressurized Thermal Shock (10 CFR 50.61).

System Intended Functions

1. Provide power to safety-related components. The mechanical portions of the Emergency Diesel Generators are required to power safety-related equipment in the event normal power supplies are not available. 10 CFR 54.4(a)(1)
2. Relied upon in safety analyses or plant evaluations to perform a function that demonstrates compliance with the Commission's regulations for Fire Protection (10 CFR 50.48). The EDGs are required to supply electrical power to fire protection equipment during a loss of offsite power. 10 CFR 54.4(a)(3)

UFSAR References

8.2.3

License Renewal Boundary Drawings

LR-302-283
LR-302-351
LR-302-353
LR-302-354

Table 2.3.3-9 **Emergency Diesel Generators and Auxiliary Systems**
Components Subject to Aging Management Review

Component Type	Intended Functions
Bolting	Mechanical Closure
Electric Heaters (Housing)	Pressure Boundary
Expansion Joints	Pressure Boundary
Filter Housing	Pressure Boundary
Flow Device	Pressure Boundary
Heat exchanger components (Air Cooler Coolant Radiator)	Heat Transfer
Heat exchanger components (Air Cooler Coolant Radiator)	Pressure Boundary
Heat exchanger components (Gear Box Lube Oil Cooler)	Heat Transfer
Heat exchanger components (Gear Box Lube Oil Cooler)	Pressure Boundary
Heat exchanger components (Jacket Coolant Radiator)	Heat Transfer
Heat exchanger components (Jacket Coolant Radiator)	Pressure Boundary
Heat exchanger components (Lube Oil Cooler)	Heat Transfer
Heat exchanger components (Lube Oil Cooler)	Pressure Boundary
Heat exchanger components (Standby Heat Exchanger/Lube Oil Heater)	Pressure Boundary
Hoses	Pressure Boundary
Piping and fittings	Pressure Boundary
Pump Casing (Diesel Fuel Transfer)	Pressure Boundary
Pump Casing (Air Cooler Coolant Pump)	Pressure Boundary
Pump Casing (DC Motor-driven Fuel Oil Pump)	Pressure Boundary
Pump Casing (Engine-driven Fuel Oil Pump)	Pressure Boundary
Pump Casing (Hand Priming Pump)	Pressure Boundary
Pump Casing (Jacket Coolant Pump)	Pressure Boundary
Pump Casing (Main Lube Oil Pump)	Pressure Boundary
Pump Casing (Pre-lube Pump)	Pressure Boundary
Pump Casing (Standby Circulating Pump)	Pressure Boundary
Pump Casing (Standby Coolant Pump)	Pressure Boundary
Sight Glasses	Pressure Boundary
Strainer Body	Pressure Boundary
Strainer Element	Filter
Tanks (Air Receiver)	Pressure Boundary
Tanks (Coolant Drain Tank)	Pressure Boundary

Tanks (Day Tank 550 Gal)	Pressure Boundary
Tanks (Diesel Generator Fuel Storage 30,000 Gal)	Pressure Boundary
Tanks (Dirty Fuel Drain Tank)	Pressure Boundary
Tanks (Expansion Tank)	Pressure Boundary
Thermowell	Pressure Boundary
Valve Body	Pressure Boundary

The aging management review results for these components are provided in:

Table 3.3.2-9 Emergency Diesel Generators and Auxiliary Systems Summary of Aging Management Evaluation

2.3.3.10 Fire Protection System

System Purpose

The Fire Protection System is a normally operating mechanical system, designed to provide for the rapid detection and suppression of a fire at the plant. The Fire Protection System consists of several plant systems including the Fire Detection Systems, Wall Openings and Fire Stops, Fire Protection Systems, Fire Protection Service Water, Cardox Fire Extinguisher System - Cable Room, and Halon Systems. The Fire Protection System is in scope for License Renewal, however some portions of the Fire Protection System are not required to perform intended functions and are not in scope.

The Fire Protection System consists of the Fire Protection Service Water System that includes deluge spray systems, wet pipe sprinkler systems, pre-action systems, interior hose reels, and yard hydrants. It also consists of halogenated suppression systems, and carbon dioxide suppression systems. Portable fire extinguishers, fire detection and signaling systems are also included. A reactor coolant pump lube oil collection system is included. The physical plant design features include fire barrier walls and slabs, fire barrier penetration seals, fire doors and dampers, fire rated enclosures, heat shields, combustible gas detectors, and acetylene monitoring equipment.

The purpose of the Fire Protection System is to reduce the likelihood of fire occurrences, promptly detect and extinguish fires if they occur, maintain the capability to safely shutdown the plant in the event of a fire, and prevent the subsequent release of a significant amount of radioactive material in the event of a fire. The Fire Protection System accomplishes this by providing fire protection in the form of detection, alarms, fire barriers, and suppression for selected areas of the plant.

System Operation

The fire protection water system consists of three fire pumps and an elevated (altitude) storage tank, which supply water through the yard main to all points requiring water for fire protection. The altitude tank has a 100,000 gallon capacity above elevation 430 ft. Internal piping in the tank permits up to 10,000 gallons to flow to the makeup demineralizers. The entire contents can flow to the fire main. A recirculation pump and three heaters are provided for maintaining water temperature in the tank above freezing.

The circulating water flume fire pump is a horizontal, diesel-engine-driven unit that has a capacity of 2500 gpm and total dynamic head of 289 ft. The horizontal suction pump takes suction from circulating water under positive head from the common intake flume. It serves fire protection for the natural draft cooling towers and discharges into the yard fire main. Taking suction from the intake chamber at the Intake Screen Pump House are the motor-driven vertical fire pump and diesel-engine-driven fire pump. These two pumps discharge into the yard fire main. The three fire pumps start automatically on a pressure drop in the system, a deluge actuation signal, can be started locally, or can be started remotely from the Control Room. The fire pumps are manually shut off, except that the motor-driven fire pump is also tripped from service on an Engineered Safety (ES) signal. The motor-driven pump can be re-started from the Control Room after bypassing the ES signal, provided offsite power is available or sufficient diesel generator capacity is available. The two diesel-engine-driven pumps automatically start on loss of AC power.

The yard fire main is comprised of two, 12 inch underground pipe loops. One loop surrounds the main plant, and the other loop surrounds the Unit 1 natural draft cooling towers. The two loops are connected by a 16 inch tie line. Each loop has internal cross ties to increase flow area and improve reliability. The loop surrounding the main plant is also connected to two, 12 inch interconnected loops in the Unit 2 yard area. Post indicator valves are provided to permit isolating sections of the yard fire main. Each of the three fire pumps supplies 125 psi water at 2500 gpm to the yard fire main and to the cooling tower loop. Any of the yard hydrants may be used to receive water from a fire department pumper to supplement the water supply to the yard fire main. The piping is sized and arranged to transport 2575 gpm to the most remote deluge system plus 1000 gpm to hoses with a minimum residual pressure of 100 psi at the most remote deluge system.

The jockey fire pump is a hydro pumping unit which automatically maintains a 108 to 125 psig pressure in the Fire Protection Service Water System. The 25 gpm pump delivers filtered or well water from the 6 inch filtered water line from the altitude tank to the makeup demineralizers.

The motor-driven pumps for the kidney filter (Reactor Building Purge and Atmospheric Cleanup portion of the Containment Isolation System) deluge water spray system located in the Reactor Building are centrifugal pumps each rated at 90 gpm. Each pump takes suction from a common 1500 gallon tank which is filled from the industrial cooler system (Closed Cycle Cooling Water System), when required, during refueling outages. The pumps are set to start when charcoal temperature in the kidney filter plenum reaches 190°F. Two of the filter temperature actuated switches must actuate in order for the pumps to start.

Water suppression systems include the fixed deluge water spray systems, wet pipe sprinkler systems, manual and automatic pre-action systems, interior hose reels, and yard hydrants. Water extinguishing systems are provided in a number of locations in the plant.

In addition to supplying water for fire protection, the fire protection water system provides water to the makeup demineralizers, cooling water to the station blackout diesel, and is a back-up water source for closed cycle cooling water systems.

Halogenated fire suppression systems and deluge water spray systems are installed in the intake structure. The halogenated fire suppression systems consist of Halon 1301 gas stored under pressure in liquid form. When actuated by a detector, the suppressant is released (in gaseous form) from tanks in the air intake tunnel to the area protected. The Halon system is actuated when embryonic explosion is detected in the protected zone, and the gas renders all matter in the treated space incombustible. Four Halon systems are provided to protect the plant ventilation air intake. The four systems are physically separated. One is immediately inside the intake superstructure, one is completely within the crash proof tunnel inside the protective curtain wall, and the other two are further inside the tunnel upstream from the fire dampers. Two types of detectors actuate these systems. One type detects the light of the initial flame front. The other type detects the pressure wave which accompanies the flame propagation. Actuating any one of these four systems also closes fire dampers, trips ventilation fans, and actuates all three deluge water spray systems.

The deluge water spray systems consist of fixed open spray heads connected to a dry pipe downstream of the release valve. When actuated by a temperature detector, the release valve permits water from the yard fire main to flow through the spray heads. As a secondary benefit,

this spray action washes contaminants from the air.

Multiple fire and hazard detectors are employed. An accelerometer is attached to the intake structure to detect its displacement. Photocells detect the ultraviolet radiation from the flame front of an embryonic explosion. Pressure rise detectors react to the pressure wave accompanying this flame front. Rate-of-temperature rise detectors are conventional for deluge water spray systems. Smoke and combustible vapor detectors are the ionization type.

The carbon dioxide (CO2) suppression system consists of a refrigerated, low pressure CO2 storage unit, fixed distribution piping, valves, nozzles, thermostats, and the associated instrumentation and control equipment. The CO2 fire suppression system protects the Relay Room in the Control Building.

Each reactor coolant pump motor in the Reactor Building Steam Generator Compartments is equipped with an oil collection system consisting of shields, gutters, and piping serving as a collection medium for potential oil leaks. This collection system minimizes oil spreading from leakage and reduces the potential for fire. Collected oil is deposited in closed tanks in the containment.

Fire detection systems are located in various areas of the plant to provide indication of fire both locally and in the Control Room. Specific fire detection systems also serve as the means for automatic actuation of fixed fire suppression systems. In addition, combustible gas detectors are provided in the Auxiliary Building, Intermediate Building, Control Building, Fuel Handling Building and the Air Intake Tunnel with alarms at local panels and in the Control Room.

The acetylene monitor system monitors for acetylene leakage from the supply line and inside the chemistry laboratories on the third floor of the Control Building. The incipient fire detection system monitors for particles of combustion in eight selected fire areas in the Control Building. These systems consist of control panels and multiple detector heads. This early warning system was installed to support the evaluation of safe shutdown related fire barrier circuit protection used in the Control Building.

Ventilation systems include features which maintain the selected plant areas safe for occupancy during a hypothetical aircraft incident. Curbs and fire dampers provide further protection. Sensing devices detecting hazards to the air intake automatically close redundant dampers to isolate the hazard and put the Control Building ventilation in the recirculation mode. Personnel in the Control Room can perform this same function manually from the Control Room. When ventilation is in the recirculation mode, the Control Building is safely and comfortably habitable for a continuous period of time, conservatively calculated to exceed 200 person-days.

All makeup air to the Control, Fuel Handling, and Auxiliary Buildings enters through the louvered intake structure, a noncombustible structure. Outdoor air flows from this point through the underground tunnel and plant ducts to the fan inlets. The fire dampers in the tunnel are Class A, 3 hour fire rating, off-center hinged pivot type (trap door), actuated by either of two explosion proof solenoid valves and release mechanisms.

For more detailed information, see UFSAR Section 9.9.

System Boundary

The boundary of the fire protection water system begins with the horizontal diesel-driven fire pump located in the circulating water flume and the vertical diesel-driven and motor-driven fire pumps located in the screen well at the Intake Screen Pump House. The discharge from these three pumps is into the yard fire main that connects to the altitude tank and continues to suppression systems, hydrants, hose stations and connections with other systems. The fire main also includes branch connections to the SBO diesel, machine shop ventilation, auxiliary boiler, and closed cooling water systems.

The boundary continues with the filtered water line from the altitude tank providing suction to the Fire Protection Service Water System jockey pump, which is used to keep the fire main pressurized.

The boundary also includes the suction to and discharge from the altitude tank recirculation pump.

The Reactor Building charcoal spray portion of the fire suppression system boundary begins with the 1500 gallon storage tank, continues through the parallel filter bank fire service spray pumps, and continues to the spray piping in the filter bank. This piping loop includes piping to and from the chemical mix tank. Piping continues from the filter bank back to the storage tank to continue the recirculation loop.

Water to fill the altitude storage tank is sourced from the Water Treatment and Distribution System and transferred to the tank by means of the filtered water pumps. Circulating water is also available as a source of fire protection water.

The Fuel Oil System supplies fuel oil for the two Fire Protection Service Water System diesel driven fire pumps diesel engines.

The boundary for the carbon dioxide suppression system begins with the refrigerated, low pressure CO2 storage unit located outside the Turbine Building on the east side at ground level, and continues through the distribution piping, valves, and nozzles to the Relay Room in the Control Building at Elevation 338.

The boundary for the halogenated suppression system begins with the halogen storage tanks and continues to the dispersal nozzles.

Portable extinguishing equipment is included in the boundary of this scoping evaluation, however a flowpath description is not appropriate for this self-contained equipment.

All associated piping, components, and instrumentation contained within the flowpath described above are included in the system evaluation boundary. Also included in the system evaluation boundary are the physical plant design features that consist of fire barrier walls and slabs, fire barrier penetration seals, fire doors and dampers, fire rated enclosures, and oil-retention dikes.

The fire detection and signaling systems and associated circuitry are evaluated as an electrical commodity.

Fire suppression systems that protect equipment that is not important to safety, and where a

fire would not significantly increase the risk of radioactive releases to the environment, are not included within the scope of license renewal.

The Fire Protection System scope boundary includes portions of the system associated with the safety-related/nonsafety-related interfaces up to the location of the first seismic anchor. The boundary also includes water-filled fire protection piping and equipment in proximity to equipment performing a safety-related function. Included in this boundary are pressure-retaining components relied upon to preserve the leakage boundary intended function of this portion of the system. For more information, refer to the License Renewal Boundary Drawings for this system. This boundary may be shown in red, or may be included within the green boundary for the Fire Protection System when it coincides with piping and equipment that perform functions associated with the fire protection (10 CFR 50.48) regulated event.

Not included in the Fire Protection System scoping boundary are the following systems, which are separately evaluated as license renewal systems:
Containment Isolation System
Closed Cycle Cooling Water System
Reactor Coolant System
Water Treatment and Distribution System
Fuel Oil System

Reason for Scope Determination

The Fire Protection System meets 10 CFR 54.4(a)(1) because it is a safety-related system that is relied upon to remain functional during and following design basis events. It meets 10 CFR 54.4(a)(2) because failure of nonsafety-related portions of the system could prevent satisfactory accomplishment of function(s) identified for 10 CFR 54.4(a)(1). It meets 10 CFR 54.4(a)(3) because it is relied upon in the safety analyses or plant evaluations to perform a function that demonstrates compliance with the Commission's regulations for Fire Protection (10 CFR 50.48) and Station Blackout (10 CFR 50.63). The Fire Protection System is not relied upon in any safety analyses or plant evaluations to perform a function that demonstrates compliance with the Commission's regulations for Environmental Qualification (10 CFR 50.49), ATWS (10 CFR 50.62), or Pressurized Thermal Shock (10 CFR 50.61).

System Intended Functions

1. Provide primary containment boundary. Isolation valves provide reactor building isolation capability. 10 CFR 54.4(a)(1)
2. Relied upon in safety analysis or plant evaluations to perform a function that demonstrates compliance with the commission's regulations for Fire Protection (10CFR 50.48) The Fire Protection System works in conjunction with fire barriers and other plant design features, and established safe shutdown systems and procedures to demonstrate compliance with fire protection regulations. The Fire Protection System reduces the likelihood of fire occurrences, promptly detects and extinguishes fires, maintains the capability to safely shutdown the plant in the event of a fire, and prevents the release of a significant amount of radioactive material in the event of a fire. 10 CFR 54.4(a)(3)
3. Resist nonsafety-related SSC failure that could prevent satisfactory accomplishment of a safety-related function. The Fire Protection System has leakage boundary and structural support intended functions, due to the connections to safety-related piping, and the potential for spatial interaction with safety-related equipment located in the vicinity of water-filled fire protection system piping. 10 CFR 54.4(a)(2)

UFSAR References

9.9

License Renewal Boundary Drawings

LR-302-169
LR-302-221
LR-302-231 Sh. 1
LR-302-231 Sh. 2
LR-302-231 Sh. 3
LR-302-231 Sh. 4
LR-302-231 Sh. 5
LR-302-233
LR-302-234
LR-302-357
LR-302-611
LR-302-652
LR-302-842
LR-302-848

Table 2.3.3-10 Fire Protection System
Components Subject to Aging Management Review

Component Type	Intended Functions
Bolting	Mechanical Closure
Concrete Curbs	Fire Barrier (Contain oil spills)
Drip Pan	Leakage Boundary
Electric Heaters	Pressure Boundary
Expansion Joints	None - Short Lived
Fire Barriers (Doors)	Fire Barrier
Fire Barriers (Fire Rated Enclosures)	Fire Barrier
Fire Barriers (Penetration Seals)	Fire Barrier
Fire Barriers (Walls and Slabs)	Fire Barrier
Fire Hydrant	Pressure Boundary
Flow Element	Pressure Boundary
Flow Element	Throttle
Gas Bottles	Pressure Boundary
Piping and fittings	Leakage Boundary
Piping and fittings	Pressure Boundary
Pump Casing (Altitude tank recirculation pump)	Pressure Boundary
Pump Casing (Diesel Horizontal Fire Pump - circ water flume)	Pressure Boundary
Pump Casing (Jockey pump)	Pressure Boundary
Pump Casing (Kidney filter spray pumps)	Pressure Boundary
Pump Casing (River Fire Pumps)	Pressure Boundary
Restricting Orifices	Pressure Boundary
Restricting Orifices	Throttle
Sight Glasses	Leakage Boundary
Spray Nozzles (CO2, Halon)	Spray
Sprinklers Heads	Pressure Boundary
Sprinklers Heads	Spray
Strainer Body	Pressure Boundary
Strainer Element	Filter
Tanks (Altitude Tank)	Pressure Boundary
Tanks (Chemical Mix Tank)	Pressure Boundary
Tanks (CO2)	Pressure Boundary
Tanks (Coolant expansion)	Pressure Boundary
Tanks (Halon Spheres)	Pressure Boundary
Tanks (RC Pump lube oil drain tanks)	Leakage Boundary
Tanks (Retard Chamber)	Pressure Boundary
Tanks (Water storage)	Pressure Boundary
Thermowell	Pressure Boundary
Valve Body	Leakage Boundary

Valve Body	Pressure Boundary
Water Motor Alarm	Pressure Boundary

The aging management review results for these components are provided in:

Table 3.3.2-10 Fire Protection System
Summary of Aging Management Evaluation

2.3.3.11 Fuel Handling and Fuel Storage System

System Purpose

The Fuel Handling and Fuel Storage (FHS) System consists of the following plant systems: Fuel Handling System, New Fuel Racks, and Spent Fuel Racks.

The FHS System is a mechanical system designed to manipulate and store new and spent fuel and control fuel geometry when not in the core. The purpose of the FHS System is to control fuel storage positions to assure a geometrically safe configuration with respect to criticality, ensure adequate shielding of irradiated fuel for plant personnel to accomplish normal operations, prevent mechanical damage to the stored fuel that could result in significant release of radioactivity from the fuel, and provide means for the safe handling of new and irradiated fuel assemblies. The FHS System accomplishes this purpose by using storage racks to safely and securely hold new and irradiated fuel in the spent fuel pool, and by using the fuel handling bridges, cranes, and other transfer equipment to move fuel. The FHS System is used during fuel movement to, from, or within the reactor vessel or the spent fuel pools, and to store new and spent fuel.

System Operation

The FHS System is comprised of three fuel handling bridges, the New Fuel Elevator, the Fuel Transfer Carriages, the Upender Mechanisms, and the New and Spent Fuel Racks. The Fuel Handling Equipment consists of the fuel handling bridges with integral fuel handling mechanisms, Control Rod Handling Mechanisms, Fuel Storage Racks, Fuel Transfer Mechanisms, and Shipping Casks. The Main Fuel Handling Bridge and Auxiliary Fuel Handling Bridge are located in the Reactor Building. The Spent Fuel Handling Bridge is located in the Fuel Handling Building.

Refueling operations are carried out from two fuel handling bridges which span the Fuel Transfer Canal. One bridge is used to shuttle spent fuel assemblies from the core to the fuel transfer station and new fuel assemblies from the transfer station to the core. During this operation, the second bridge can be occupied with relocating partially spent fuel assemblies in the core. The fuel handling bridge, which transfers fuel assemblies between the reactor vessel and the fuel transfer station, is equipped with two trolley-mounted hoists. One hoist (fuel handling mechanism) is equipped with a fuel grapple and the second hoist (control rod handling mechanism) houses the control rod grapple. The second fuel handling bridge in the Reactor Building has only one trolley mounted hoist equipped with a fuel grapple and is used primarily for shuffling or rearranging partially spent fuel assemblies from one position in the core to another. Only the structural support members and components of the fuel handling bridges and the major fuel handling components are in scope for License Renewal.

New fuel assemblies are received in shipping containers in the rail car bay inside the Fuel Handling Building. The new fuel containers are normally unloaded from the shipping conveyance by means of the small traveling hoist of the Fuel Handling Building Crane. The shipping containers are rotated and placed on the loading dock such that the new fuel elements within them can be placed in the upright position when the container is opened. The shipping container is then opened and the new fuel elements placed in the upright position, and then the fuel assemblies are removed from the container by means of a manually operated tool suspended from the Fuel Handling Building Crane auxiliary hoist. The new fuel element is then

inspected and placed in either Spent Fuel Pool A or B or the new fuel storage vault. The function of the New Fuel Elevator is to vertically transport new fuel assemblies and Control Components from the above-water operating floor down to a position near the bottom of the pool, where the Spent Fuel Handling Bridge can be used to move them to storage, or to one of the transfer systems.

Spent fuel assemblies removed from the reactor are transported to the Spent Fuel Pool from the Reactor Building via two Fuel Transfer Tubes by means of the Fuel Transfer Mechanisms. The Fuel Transfer Mechansims are underwater carriages that run on tracks extending from the Spent Fuel Pool through the transfer tubes and into the Reactor Building. The transfer carriages are moved by cable drives, considered to be subcomponents of the transfer carriages. An Upender Mechanism is provided at each end of each Fuel Transfer Tube to rotate fuel assemblies to a vertical position. The Upender Mechanism frame is rotated to a horizontal position for passage through the Fuel Transfer Tube and then rotated back to a vertical position in the Spent Fuel Pool or Reactor Building for vertical removal or insertion of the fuel assembly. The Fuel Transfer Tubes contain gate valves on the Fuel Handling Building side and a flanged closure on the Reactor Building side. The spent fuel assemblies are removed from the Fuel Transfer Carriage fuel basket. The spent fuel assemblies are stored in racks in parallel rows. The spacing in the Spent Fuel Pool storage locations is adequate to prevent criticality. The storage racks in Pool B are unpoisoned and use a stainless steel and water flux trap between cells as a means of controlling reactivity. In Region I of Pool A, strips of Boral neutron absorber material are between the checkerboard boxes and the sheathing without a water gap. The cells are welded together in a specified manner to become a freestanding structure, which is seismically qualified without depending on neighboring modules or Spent Fuel Pool walls for support. New fuel may be stored dry in the dry fuel storage area within the Fuel Handling Building and then transferred to Spent Fuel Pool A or B when refueling is about to be initiated. New fuel may also be stored in either Spent Fuel Pool.

For more detailed information, see UFSAR Section 9.7.

System Boundary

Included in the evaluation boundary of the FHS System is the Main, Auxiliary, and Spent Fuel Handling Bridges; the New Fuel Elevator; the Fuel Transfer Carriages; the Upender Mechanisms; and the Spent Fuel Racks and New Fuel Racks. The storage racks are in scope since they perform a safety-related function. The fuel handling bridges, New Fuel Elevator, Fuel Transfer Carriages, and Upender Mechanisms are in scope because they are required to maintain structural integrity during a design basis seismic event.

Also included in the boundary of the FHS System is the Fuel Transfer Tubes, Fuel Transfer Tube flanges at the Fuel Transfer Canal, the Fuel Transfer Tube flange “O” ring test connections and piping, the Fuel Transfer Tube drain lines, and the Fuel Transfer Tube isolation valves at Spent Fuel Pool A. The tubes, flanges, isolation valves, and drain lines provide the primary containment boundary.

The nonsafety-related piping on the Fuel Transfer Tube drain lines have the potential for spatial interaction with safety-related equipment in the Reactor Building and Fuel Handling Building. The nonsafety-related fuel handling bridges and associated equipment have the potential for spatial interaction with safety-related equipment in the Reactor Building and Fuel Handling Building.

Not included in the evaluation boundary of the FHS System are the Spent Fuel Pools, liners, gates, and plugs, the Reactor Building Crane, the Fuel Handling Building Cranes and Monorail Hoists, and supports for components and tools. The Spent Fuel Pools, liners, gates, and plugs are evaluated separately with the Reactor Building Structure. The Reactor Building and Fuel Handling Building Cranes and Monorail Hoists are evaluated separately with the Cranes and Hoists System. Supports for components are separately evaluated with the Structural Commodities group.

Not included in the FHS License Renewal scoping boundary are the following interface systems, which are separately evaluated as License Renewal systems:

Cranes and Hoists
Fuel Handling Building
Reactor Building
Structural Commodities

Reason for Scope Determination

The Fuel Handling and Fuel Storage System meets 10 CFR 54.4(a)(1) because it is a safety-related system that is relied upon to remain functional during and following design basis events. It meets 10 CFR 54.4(a)(2) because failure of nonsafety-related portions of the system could prevent satisfactory accomplishment of function(s) identified for 10 CFR 54.4(a)(1). The Fuel Handling and Fuel Storage System does not meet 10 CFR 54.4(a)(3) because it is not relied upon in any safety analyses or plant evaluations to perform a function that demonstrates compliance with the Commission's regulation for Anticipated Transient Without Scram (10 CFR 50.62), Environmental Qualification (10 CFR 50.49), Fire Protection (10 CFR 50.48), Station Blackout (10 CFR 50.63), or Pressurized Thermal Shock (10 CFR 50.61).

System Intended Functions

1. Provide primary containment boundary. Ensure the Fuel Transfer Tubes are sealed to prevent a containment release pathway. 10 CFR 54.4(a)(1)
2. Ensure adequate cooling in the spent fuel pool to maintain stored fuel within acceptable temperature limits. The fuel storage racks control fuel positions to assure a geometrically safe configuration with respect to criticality. 10 CFR 54.4(a)(1)
3. Resist nonsafety-related SSC failure that could prevent satisfactory accomplishment of a safety-related function. Fuel handling bridges and other equipment are seismically restrained for anti-falldown to prevent damage to the nuclear fuel and the reactor. 10 CFR 54.4(a)(2)

UFSAR References

9.7.1
9.7.2
5.1.1

License Renewal Boundary Drawings

LR-302-630

Table 2.3.3-11 Fuel Handling and Fuel Storage System
Components Subject to Aging Management Review

Component Type	Intended Functions
Bolting	Mechanical Closure
Bolting	Structural Support
Crane/Hoist (Auxiliary Fuel Handling Bridge)	Structural Support
Crane/Hoist (Grapple/Mast for All Bridges)	Structural Support
Crane/Hoist (Main Fuel Handling Bridge)	Structural Support
Crane/Hoist (Rails)	Structural Support
Crane/Hoist (Spent Fuel Handling Bridge)	Structural Support
Fuel Storage Racks (New Fuel)	Structural Support
Fuel Storage Racks (Spent Fuel)	Absorb Neutrons
Fuel Storage Racks (Spent Fuel)	Structural Support
Hoses	Leakage Boundary
Piping and fittings	Leakage Boundary
Piping and fittings	Pressure Boundary
Valve Body	Leakage Boundary
Valve Body	Pressure Boundary

The aging management review results for these components are provided in:

Table 3.3.2-11 Fuel Handling and Fuel Storage System
Summary of Aging Management Evaluation

2.3.3.12 Fuel Oil System

System Purpose

The Fuel Oil (FO) System is an auxiliary system designed to store and transfer diesel fuel oil and gasoline. The FO System is in scope for License Renewal. However, portions of the FO System are not in scope for License Renewal.

The FO System is a standby mechanical system designed to receive, store, and transfer diesel fuel oil for use in the Auxiliary Boilers, Emergency Diesel Generators, Diesel Fire Pumps, Substation Emergency Diesel Generators, and Fire Training Facility. The FO System accomplishes this purpose by providing storage tanks, transfer pumps, and piping for diesel fuel oil storage and transfer. The FO system also includes components used to store and deliver gasoline for vehicle fueling.

The Substation Diesel Fuel Oil Storage Tanks, Substation Diesel Fuel Oil Day Tanks, Fire Training Facility fuel oil tank, and Underground Transportation Gasoline Tank are not in scope for License Renewal because they do not perform an intended function, are not required to support an intended function, and have no spatial or structural interactions with safety-related equipment.

System Operation

The Fuel Oil (FO) System consists of tanks, pumps, piping and components, and instrumentation and control. Fuel oil is unloaded from trucks through a hose connection, passes through strainers, the truck unloading pump, and then to the 200,000-gallon Fuel Oil Storage Tank. Fuel oil then may be transferred to the 50,000-gallon Fuel Oil Tank via two parallel pumps and a strainer. There is also a separate unloading station and unloading pump which feeds the 50,000-gallon Fuel Oil Tank. Fuel oil may then be transferred to the Auxiliary Boilers via the Auxiliary Boiler Fuel Oil Transfer Pumps or to the 30,000-gallon Diesel Generator Fuel Storage Tank. There are also separate truck fill connections and associated fill and transfer piping for the two Diesel Fire Pumps Fuel Oil Tanks, the two Substation Diesel Fuel Oil Day Tanks, and the Fire Training Facility Fuel Oil Tank. The system also contains a separate underground storage tank for transportation gasoline.

For more detailed information, see UFSAR Section 2.6.

System Boundary

The Fuel Oil System boundary includes the two Diesel Fire Pump Fuel Oil Tanks, associated fill and drain piping, and transfer piping to the Diesel Fire Pumps. The system also includes piping where it exits the ground upstream of the Auxiliary Boiler Fuel Oil Strainer isolation valve, through the strainer, Auxiliary Boiler Fuel Oil Transfer Pumps, up to the atomizer stop valves and atomizer air regulator valve. The system also includes piping, supplying fuel oil from the 50,000-gallon Fuel Oil Tank, where it exits the ground upstream of the Emergency Diesel Generator (EDG) Day Tank flow meters up to the EDG Diesel Fuel Transfer Pump suction valves.

All associated piping, components and instrumentation contained within the flow path described above are included in the system evaluation boundary.

Not evaluated in the Fuel Oil System scoping boundary are the fuel oil supply systems associated with the Station Blackout and UPS Diesel Generators, which are evaluated with the Station Blackout and UPS Diesel Generator Systems. Not evaluated in the scoping boundary is the 30,000-gallon Diesel Generator Fuel Storage Tank, which is evaluated with the Emergency Diesel Generators and Auxiliary Systems. Also not evaluated in the scoping boundary is the Auxiliary Boiler fuel injection piping and components, which are evaluated with the Auxiliary Steam System. The Diesel Fire Pumps are evaluated with the Fire Protection System.

Not included in the FO System License Renewal scoping boundary are the following interfacing systems, which are separately evaluated as License Renewal systems:

Auxiliary Steam System
Emergency Diesel Generators and Auxiliary Systems
Fire Protection System
Station Blackout and UPS Diesel Generator Systems

Reason for Scope Determination

The Fuel Oil System is not in scope under 10 CFR 54.4(a)(1) because no portions of the system are safety-related or relied upon to remain functional during and following design basis events. The Fuel Oil System meets 10 CFR 54.4(a)(2) because failure of nonsafety-related portions of the system could prevent satisfactory accomplishment of function(s) identified for 10 CFR 54.4(a)(1). It also meets 10 CFR 54.4(a)(3) because it is relied upon in the safety analyses or plant evaluations to perform a function that demonstrates compliance with the Commission's regulations for Fire Protection (10 CFR 50.48). The Fuel Oil System is not relied upon in safety analyses or plant evaluations to perform a function that demonstrates compliance with the Commission's regulations for Environmental Qualification (10 CFR 50.49), Anticipated Transient Without Scram (ATWS) (10 CFR 50.62), Station Blackout (10 CFR 50.63), or Pressurized Thermal Shock (PTS) (10 CFR 50.61).

System Intended Functions

1. Resist nonsafety-related SSC failure that could prevent satisfactory accomplishment of a safety-related function. Piping has spatial interaction near the Emergency Diesels and Auxiliary Systems and Auxiliary Steam System. 10 CFR 54.4(a)(2)
2. Relied upon in safety analyses or plant evaluations to perform a function that demonstrates compliance with the Commission's regulations for Fire Protection (10 CFR 50.48). Receive, store, and transfer fuel oil for use in the Diesel Fire Pumps. 10 CFR 54.4(a)(3)

UFSAR References

2.6

License Renewal Boundary Drawings

LR-302-051
LR-302-283
LR-302-351

Table 2.3.3-12 **Fuel Oil System**
Components Subject to Aging Management Review

Component Type	Intended Functions
Bolting	Mechanical Closure
Flow Device	Leakage Boundary
Piping and fittings	Leakage Boundary
Piping and fittings	Pressure Boundary
Pump Casing (Auxiliary Boiler Fuel Oil Transfer Pumps)	Leakage Boundary
Strainer Body	Leakage Boundary
Tanks (All Diesel Fire Pump Fuel Oil Tanks)	Pressure Boundary
Valve Body	Leakage Boundary
Valve Body	Pressure Boundary

The aging management review results for these components are provided in:

Table 3.3.2-12 Fuel Oil System
Summary of Aging Management Evaluation

2.3.3.13 Hydrogen Monitoring

System Purpose

The purpose of the Hydrogen Monitoring (HM) System is to monitor hydrogen concentration inside the Reactor Building during accident and post-accident conditions.

The HM System accomplishes this purpose by circulating a sample of the Reactor Building atmosphere through piping and hydrogen analyzers and calculating the hydrogen concentration of that sample.

The HM System is not in service during normal operation, although it is available at all times.

System Operation

The Hydrogen Monitoring (HM) System is comprised of piping and fittings, valves, and two (2) hydrogen analyzers.

The HM System is not in service during normal operation, although it is available at all times. It is placed in service during post LOCA conditions.

The system flow path begins at the sample point near the top of the Reactor Building dome. It continues to a Reactor Building penetration, through the Reactor Building isolation valve in the Intermediate Building to the hydrogen analyzer. The flow path then returns from the hydrogen analyzer, through the same Reactor Building penetration, and ends in the Reactor Building.

System redundancy is achieved by utilizing two complete sample analyzing and conditioning systems. Each system is self-sufficient and independent of the other.

Motive force for sample flow is provided by the hydrogen analyzer.

Support systems consist of the 480 V Auxiliary System, which provides power to the analyzers, and 250/125 VDC System, which provides power to the Reactor Building isolation valves.

Reagent and calibration gas bottles are connected to the system. The reagent is used during analysis. The calibration gas is used to calibrate zero point and maximum value readings of the monitor.

For more detailed information, see UFSAR Section 6.5.2.

System Boundary

The Hydrogen Monitoring (HM) System boundary begins at the sample point near the top of the Reactor Building dome. It continues to a Reactor Building penetration, through the Reactor Building isolation valves in the Intermediate Building to the hydrogen analyzer. The system boundary then returns from the hydrogen analyzer, through the same Reactor Building penetration, and ends in the Reactor Building.

The boundary also includes the hydrogen analyzers and piping through the reagent gas pressure regulator valve and the calibration gas pressure regulator valve, and up to the reagent and calibration bottles.

The reagent and calibration bottles are short-lived components and are therefore not subject to aging management review.

All associated piping, components and instrumentation contained within the flow path described above are included in the system evaluation boundary.

There are no mechanical interfaces with the HM system.

Reason for Scope Determination

The Hydrogen Monitoring System meets 10 CFR 54.4(a)(1) because it is a safety-related system that is relied upon to remain functional during and following design basis events. It does not meet 10 CFR 54.4(a)(2) because failure of nonsafety-related portions of the system could not prevent satisfactory accomplishment of function(s) identified for 10 CFR 54.4(a)(1). The Hydrogen Monitoring System meets 10 CFR 54.4(a)(3) because it is relied upon in safety analyses or plant evaluations to perform a function that demonstrates compliance with the Commission's regulation for Environmental Qualification (10 CFR 50.49). The Hydrogen Monitoring System is not relied upon in any safety analyses or plant evaluations to perform a function that demonstrates compliance with the Commission's regulation for Fire Protection (10 CFR 50.48), Pressurized Thermal Shock (10 CFR 50.61), Anticipated Transient Without Scram (10 CFR 50.62), or Station Blackout (10 CFR 50.63).

System Intended Functions

1. Provide primary containment boundary. Piping and isolation valves must isolate flow path through Reactor Building penetrations. 10 CFR 54.4(a)(1)
2. Control combustible gas mixtures in the primary containment atmosphere. Provides monitoring of Reactor Building hydrogen concentration to ensure Reactor Building hydrogen levels are maintained at appropriate levels. 10 CFR 54.4(a)(1)
3. Relied upon in safety analyses or plant evaluations to perform a function that demonstrates compliance with the Commission's regulations for Environmental Qualification (10 CFR 50.49). Containment isolation valves are part of the EQ program. 10 CFR 54.4(a)(3)

UFSAR References

6.5.2

License Renewal Boundary Drawings

LR-302-674

Table 2.3.3-13 Hydrogen Monitoring
Components Subject to Aging Management Review

Component Type	Intended Functions
Bolting	Mechanical Closure
Piping and fittings	Pressure Boundary
Valve Body	Pressure Boundary

The aging management review results for these components are provided in:

Table 3.3.2-13 Hydrogen Monitoring
Summary of Aging Management Evaluation

2.3.3.14 Instrument and Control Air System

System Purpose

The Instrument & Control Air System is a mechanical system designed to continuously deliver clean, dry pressurized air throughout the plant. The Instrument & Control Air System includes two plant systems: the Plant Instrument Air System, which includes the Backup Instrument Air and Two Hour Backup Instrument Air plant sub-systems; and the Plant Service Air System. The Instrument & Control Air System is in scope for License Renewal.

The Instrument & Control Air System supplies air to virtually every system in the plant. The system consists of compressors, air dryers, filters, receivers, inter and after coolers, storage cylinders, piping, valves and supporting instrumentation. The boundary with these systems extends up to and includes the air operator and positioner of the end user system components, such as valves, dampers and pneumatic instrumentation.

The function of the Instrument & Control Air System is to continuously deliver clean, dry, pressurized air in sufficient quantities to points throughout the plant. The system utilizes a main air compressor, which in normal operation is sufficient to supply clean, dry air to plant instrument air users. When the main compressor is lost or is unable to maintain pressure, two oil free standby instrument air compressors are available, each discharging through a separate after-cooler and air receiver to a common air dryer. Two lubricated plant service air compressors provide additional backup. If instrument air system pressure continues to drop, air will automatically flow from the Service Air System, through an oil removal filter and then to the Instrument Air dryer to provide dry air to the plant.

The function of the Backup Instrument Air System (BUIAS) is to supply undried air to critical secondary plant components on a loss of pressure. There are two BUIAS compressors and associated distribution headers, one located in the Turbine Building and one located in the Intermediate Building. The BUIAS compressor supplies air to a distribution header in the Turbine Building to allow equipment critical to plant shutdown to function. The BUIAS compressor supplies air to a distribution header in the Intermediate Building to allow the Feedwater control Valves and the Main Steam Atmospheric Dump valves to function.

The main function of the Two Hour Backup Instrument Air System (2HBUIAS) is to provide compressed air for operation of components within the Main Steam, Reactor River and Emergency Feedwater Systems upon the loss of the Instrument Air System which may result from a design basis event such as a high energy line break, loss of offsite power, station blackout, or seismic event that could preclude reactor decay heat removal via the Emergency Feedwater and Main Steam Systems.

The 2HBUIAS supplies components in the Main Steam, Reactor River and Emergency Feedwater systems from two independent trains. An air compressor is provided to supply dry, filtered air to maintain the two hour air bank bottle pressures between 1700 and 2250 psig. The compressor is operated manually when charging of the air banks is required.

The function of the Plant Service Air System is to provide convenient outlets throughout the plant for general compressed air use and to provide backup source of compressed air to the Instrument Air System.

System Operation

The Instrument & Control Air System consists of air compressors, air dryers, filters, storage cylinders, piping, valves air operators, positioners and supporting instrumentation. At the focal point of system operation are the four sources of air supply: the Main Instrument Air compressor, two standby Instrument Air Compressors, two Service Air compressors, and two Backup Instrument Air compressors.

Normal operation of the Instrument Air System is in automatic mode with the Main Instrument Air Compressor supplying both the Instrument Air and Service Air systems with nominally 100 psig air. The Main Instrument Air Compressor runs continuously loading and unloading as necessary to supply system demands. The two standby Instrument Air Compressors are in automatic mode and not running unless receiver pressure drops to 85 psig. When pressure drops below 85 psig the standby Instrument Air Compressor starts, loads and pressurizes the receiver to 95 psig, unloads and after 5 minutes of running unloaded it shuts down.

If, during the course of normal operation, instrument air pressure drops to 85 psig for a prolonged period of time, valves reposition to line up the two standby Instrument Air Compressors and they supply all instrument air loads in the plant. The instrument air pressure will cycle between 85 and 95 psig. However, if the instrument air pressure continues to drop, at 80 psig the two Service Air compressors backup the Instrument Air Compressors. If pressure continues to decrease then at 70 psig the backup instrument air header block valves open and pressurize the backup instrument air headers with the Backup Instrument Air compressors. If instrument air pressure continues to decrease to 60 psig, the system aligns to split the primary and secondary instrument air systems. The Main Instrument Air compressor supplies the Turbine Building, Intermediate Building and Outbuildings; and the standby Instrument Air Compressors supply the Auxiliary and Fuel Handling Buildings and selected loads in the Intermediate Building with instrument air. Also at 60 psig switching valves in the Two Hour Emergency Backup Air System begin to open in attempt to restore air pressure to vital components necessary for the safe shutdown of the plant.

For more detailed information, see UFSAR Section 5.1.1, 5.3.5, 7.1.4.3, 7.3.2.2 and 9.10

System Boundary

The Instrument & Control Air System consists of two plant systems: the Plant Instrument Air System and the Plant Service Air System.

The Instrument & Control Air System interfaces with a large number of systems in the plant. The in-scope portion of the system is limited to 1) the components that comprise the Two Hour Backup Instrument Air System which is a small subsystem of the Instrument & Control Air System; 2) those Instrument Air components that service air operated valves required by Abnormal Operating Transients (AOT) or safe shutdown and 3) those components required to maintain the pressure integrity of the air supply system out to the first isolation valve or to the end user component in supply headers and branch piping associated with item 2.

The in-scope components associated with the Two Hour Backup Instrument Air System begin with the isolation check valves on the air supply lines and downstream include air piping, instrumentation, storage bottles, pressure regulators, filters and includes the valve air operator and positioner of the end user system valve. In the case of Instrument and Control Air System containment isolation valves, the in-scope portion includes the isolation valves on the boundary of the penetration. The in-scope components that support abnormal operating transients and

safe shutdown begin at the Air Compressors and include air dryers, filters, receivers, inter and after coolers, storage cylinders, air piping, supporting instrumentation and includes the air operator and/or positioner of the end user system valve.

All associated piping components and instrumentation contained within the flow path described above is included in the system evaluation boundary.

Also included in the License Renewal scoping boundary of the Instrument & Control Air System are those portions of nonsafety-related piping and equipment that extend beyond the safety-related/nonsafety-related interface up to the location of the first seismic or equivalent anchor. For more information, refer to the License Renewal Boundary Drawings for identification of this boundary, shown in red.

Not included in the Instrument & Control Air License Renewal System scoping boundary are the following systems, which are separately evaluated as license renewal systems:

Closed Cycle Cooling Water System
Emergency Feedwater System
Feedwater System
Open Cycle Cooling Water System
Primary Containment Heating & Ventilation System
Main Steam System
Miscellaneous Floor & Equipment Drains System

Reason for Scope Determination

The Instrument & Control Air System meets 10 CFR 54.4(a)(1) because it is a safety-related system that is relied upon to remain functional during and following design basis events. It meets 10 CFR 54.4(a)(2) because failure of nonsafety-related portions of the system could prevent satisfactory accomplishment of function(s) identified for 10 CFR 54.4(a)(1). It also meets 10 CFR 54.4(a)(3) because it is relied upon in the safety analyses or plant evaluations to perform a function that demonstrates compliance with the Commission's regulations for Fire Protection (10 CFR 50.48) and Station Blackout (10 CFR 50.63). The Instrument & Control Air System is not relied upon in any safety analyses for or plant evaluations to perform a function that demonstrates compliance with the Commission's regulation for Environmental Qualification (10 CFR 50.49), Automatic Transient Without Scram (10 CFR 50.62) or Pressurized Thermal Shock (10 CFR 50.61).

System Intended Functions

1.Provide primary containment boundary. The Instrument & Control System includes Reactor Building isolation valves to assure that radioactive material is not inadvertently transferred out of the Reactor Building and includes isolation valves associated with the Nuclear Service Closed Cooling Surge Tank. 10 CFR 54.4(a)(1)
2. Provide secondary heat sink. The Instrument and Control Air System services valves in the Feedwater, Main Steam, Extraction Steam and Emergency Feedwater Systems that are required to maintain secondary side pressure and inventory, and maintain pressure boundary for main condenser vacuum during abnormal operating conditions to support gas to liquid iodine partitioning in the main condenser. 10CFR54.4(a)(1)
3.Resist nonsafety-related SSC failure that could prevent satisfactory accomplishment of a

safety related function. The Instrument and Control Air System consists of nonsafety-related components which have the potential to affect components that support safe shutdown and Abnormal Operating Transients. The Instrument and Control Air System also includes nonsafety-related components that have the potential for spatial interaction with safety-related components. 10CFR54.4(a)(2)
4. Relied upon in safety analyses or plant evaluations to perform a function that demonstrates compliance with the commission's regulations for Fire Protection (10 CFR 50.48). The Two Hour Backup instrument air bottles and local air bottles provide air to critical shutdown components. 10CFR54.4(a)(3)
5. Relied upon in safety analyses or plant evaluations to perform a function that demonstrates compliance with the commission's regulations for Station Blackout (10 CFR 50.63). The Instrument and Control Air System supports equipment, which are required to perform functions during a Station Blackout event. 10CFR54.4(a)(3)

UFSAR References

5.3.5
7.1.4.3
7.3.2.2
9.10.1
9.10.3

License Renewal Boundary Drawings

LR-302-032
LR-302-181
LR-302-203
LR-302-231
LR-302-268
LR-302-269
LR-302-270
LR-302-271
LR-302-272
LR-302-273
LR-302-275
LR-302-277
LR-302-278
LR-302-279
LR-302-302
LR-302-304
LR-302-669
LR-302-695
LR-302-706
LR-302-712
LR-302-721

Table 2.3.3-14 **Instrument and Control Air System**
Components Subject to Aging Management Review

Component Type	Intended Functions
Bolting	Mechanical Closure
Filter Housing	Pressure Boundary
Flow Device	Pressure Boundary
Gas Bottles	Pressure Boundary
Heat exchanger components	Heat Transfer
Heat exchanger components	Pressure Boundary
Hoses	Pressure Boundary
Piping and fittings	Pressure Boundary
Piping and fittings	Structural Support
Pump Casing [Compressor]	Pressure Boundary
Regulator	Pressure Boundary
Strainer Body	Pressure Boundary
Tanks	Pressure Boundary
Tanks (Instrument Air Dryers)	Pressure Boundary
Valve Body	Pressure Boundary
Water Trap	Pressure Boundary

The aging management review results for these components are provided in:

Table 3.3.2-14 Instrument and Control Air System
Summary of Aging Management Evaluation

2.3.3.15 Intake Screen and Pump House Ventilation System

System Purpose

The Intake Screen and Pump House Ventilation (ISPV) System is in scope for License Renewal and is designed to provide tempered air to the Intake Screen and Pump House.

The purpose of the ISPV System is to provide filtered, tempered air to safety-related areas of the Intake Screen and Pump House during normal plant operation. The ISPV System accomplishes this purpose by supplying both outside and recirculated air to rooms within the Intake Screen and Pump House.

System Operation

The ISPV System consists of air coolers, electric heaters, fans, dampers, ductwork and fittings, and instrumentation and control.

The ISPV System is provided with two air handling unit trains, one being a standby. Each train contains a roughing filter, air cooler, and ventilation fan. Ductwork is used to convey the air from the air handling units to the pump rooms, where it is discharged. Air circulates from the pump rooms through transfer openings provided in the walls and returns to the air handling units.

Outdoor air for ventilation is introduced into the building through a wall-mounted fan. The ventilation fan is interlocked electrically with the air handling units for simultaneous operation. Electric unit heaters provide heat to maintain minimum building ambient temperatures.

Raw water from the Open Cycle Cooling Water System is designed to be pumped through strainers and through the cooling coils to provide building heat removal during normal plant operation. During a design basis accident (DBA), cooling water is not required for building heat removal. Analysis has demonstrated that safety related equipment within the Intake Screen and Pump House can operate safely without any adverse affects up to 120 degrees F. Portable ventilation fans would be provided as necessary to keep temperatures less than 120 degrees following a DBA.

Instrument and Control Air System provides the air supply for the pneumatically operated dampers.

For more detailed information, see UFSAR Section 9.8.8.

System Boundary

The ISPV System boundary begins at the Intake Screen and Pump House Supply Fan, which is wall mounted in the outside wall. It continues through roughing filters, air coolers, and ventilation fans. Air inside the Intake Screen and Pump House is circulated and returns to the ventilation fans.

Not included in the ISPV System Boundary is the Intake Screen and Pump House Supply Fan housing, which is evaluated as a part of the Intake Screen and Pump House.

Not included in the ISPV System License Renewal scoping boundary are the following

interfacing systems, which are separately evaluated as License Renewal systems:

Instrument and Control Air System
Open Cycle Cooling Water System

Reason for Scope Determination

The Intake Screen and Pump House Ventilation (ISPV) System meets 10 CFR 54.4(a)(1) because it is a safety-related system that is relied upon to remain functional during and following design basis events. The Intake Screen and Pump House Ventilation System is not in scope under 10 CFR 54.4(a)(2) because failure of nonsafety-related portions of the system would not prevent satisfactory accomplishment of function(s) identified for 10 CFR 54.4(a)(1). It also meets 10 CFR 54.4(a)(3) because it is relied upon in the safety analyses or plant evaluations to perform a function that demonstrates compliance with the Commission's regulations for Fire Protection (10 CFR 50.48). The Intake Screen and Pump House Ventilation System is not relied upon in any safety analyses or plant evaluations to perform a function that demonstrates compliance with the Commission's regulation for Environmental Qualification (10 CFR 50.49), Pressurized Thermal Shock (10 CFR 50.61), Anticipated Transient Without Scram (10 CFR 50.62), or Station Blackout (10 CFR 50.63).

System Intended Functions

1. Maintain emergency temperature limits within areas containing safety-related components. Maintain building ambient temperature within limits set in FSAR Section 9.8.8 at all times. 10 CFR 54.4(a)(1)
2. Relied upon in safety analyses or plant evaluations to perform a function that demonstrates compliance with the Commission's regulations for Fire Protection (10 CFR 50.48). The ISPV System contains fire dampers, which are required to function. 10 CFR 54.4(a)(3)

UFSAR References

5.1.1
9.8.8

License Renewal Boundary Drawings

LR-302-844

Table 2.3.3-15 Intake Screen and Pump House Ventilation System Components Subject to Aging Management Review

Component Type	Intended Functions
Bolting	Mechanical Closure
Damper Housing	Pressure Boundary
Ducting and Components	Pressure Boundary
Expansion Joints	Pressure Boundary
Fan Housing	Pressure Boundary
Filter Housing	Pressure Boundary

The aging management review results for these components are provided in:

Table 3.3.2-15 Intake Screen and Pump House Ventilation System Summary of Aging Management Evaluation

2.3.3.16 Intermediate Building Ventilation System

System Purpose

The Intermediate Building Ventilation (IBV) System consists of the following plant systems: Intermediate Building Heating &Ventilation System and Emergency Feedwater Pump Rooms Cooling System. The IBV System is in scope for License Renewal and is designed to provide tempered air to the Intermediate Building.

The purpose of the IBV System is to provide filtered, tempered air to the Intermediate Building. The IBV System accomplishes this purpose by recirculating tempered air throughout the Intermediate Building. The system is in scope for License Renewal to cool the safety-related Emergency Feedwater Pump Rooms, which are located within Intermediate Building.

System Operation

The IBV System consists of air coolers, fans, dampers, ductwork and fittings, and instrumentation and control.

The Emergency Feedwater Pump Rooms Cooling is provided with two air handling unit trains, one being a standby. Each train contains a roughing filter, air cooler, and ventilation fan. Indoor air from within the Intermediate Building is drawn through the air handling units and discharged into the pump rooms. Water from the Closed Cycle Cooling Water System is used to remove the heat load.

System Boundary

The IBV System boundary begins at the Emergency Feedwater Pump Room air handling units. The system continues through dampers and ends where it exhausts into the pump rooms.

Not included in the IBV System license renewal scoping boundary are the following interfacing systems, which are separately evaluated as License Renewal systems:

Closed Cycle Cooling Water System
Instrument and Control Air System

Reason for Scope Determination

The Intermediate Building Ventilation (IBV) System meets 10 CFR 54.4(a)(1) because it is a safety-related system that is relied upon to remain functional during and following design basis events. The Intermediate Building Ventilation System is not in scope under 10 CFR 54.4(a)(2) because failure of nonsafety-related portions of the system would not prevent satisfactory accomplishment of function(s) identified for 10 CFR 54.4(a)(1). It also meets 10 CFR 54.4(a)(3) because it is relied upon in the safety analyses or plant evaluations to perform a function that demonstrates compliance with the Commission's regulations for Fire Protection (10 CFR 50.48) and Station Blackout (10 CFR 50.63). The Intermediate Building Ventilation System is not relied upon in any safety analyses or plant evaluations to perform a function that demonstrates compliance with the Commission's regulation for Environmental Qualification (10 CFR 50.49), Pressurized Thermal Shock (10 CFR 50.61), or Anticipated Transient Without

Scram (10 CFR 50.62).

System Intended Functions

1. Maintain emergency temperature limits within areas containing safety-related components. Provide heat removal from Emergency Feed Pump rooms when EFW system is required per Tech. Spec. 3.4 to maintain temperature within limits set in TDR 900. CFR 54.4(a)(1)
2. Relied upon in safety analyses or plant evaluations to perform a function that demonstrates compliance with the Commission's regulations for Fire Protection (10 CFR 50.48). Fire dampers are required to function. 10 CFR 54.4(a)(3)
3. Relied upon in safety analyses or plant evaluations to perform a function that demonstrates compliance with the Commission's regulations for Station Blackout (10 CFR 50.63). Maintain temperature within NUMARC limits for the SBO coping duration. 10 CFR 54.4(a)(3)

UFSAR References

5.1.1
9.8.6

License Renewal Boundary Drawings

LR-302-842 Sh. 2

Table 2.3.3-16 Intermediate Building Ventilation System Components Subject to Aging Management Review

Component Type	Intended Functions
Bolting	Mechanical Closure
Damper Housing	Pressure Boundary
Ducting and Components	Pressure Boundary
Expansion Joints	Pressure Boundary
Fan Housing	Pressure Boundary
Filter Housing	Pressure Boundary

The aging management review results for these components are provided in:

Table 3.3.2-16 Intermediate Building Ventilation System Summary of Aging Management Evaluation

2.3.3.17 Liquid and Gas Sampling System

System Purpose

The Liquid and Gas Sampling (LGS) System consists of the following plant systems: Nuclear Liquid Sampling System, RADGAS Sampling System, Turbine Plant Sampling System, Auxiliary Boiler Sampling System, and Post Accident Sampling System. The LGS System is an auxiliary system designed to provide liquid, steam, and gas samples of plant processes for chemical and radiochemical analysis. The LGS System accomplishes this purpose by transporting samples from the plant systems being sampled to the sampling sinks. The LGS System is in scope for License Renewal. However, portions of the system are not required to perform any intended function and are not in scope.

System Operation

The Liquid and Gas Sampling (LGS) System consists of piping, pumps, valves, coolers, and piping components. Under normal operating conditions the system can be used to obtain reactor coolant samples and samples from the Makeup and Purification and Radwaste Systems and other nuclear and non-nuclear systems. Under post-accident conditions, the system provides the capability to obtain high-activity samples of reactor coolant letdown, pressurizer steam or water spaces, and the Decay Heat Removal Cooler outlets. The system is designed to meet post-accident sampling requirements.

The sample points for Core Flood Tanks, reactor coolant, and pressurizer begin in containment. The sample lines penetrate containment and then pass through coolers, where required, before going to the sample panel for analysis. Other sample points begin outside of containment for the Makeup Tank liquid and gas, Purification Demineralizer, Deborating Demineralizer, Evaporator Condensate Demineralizer, Cation Demineralizers, Miscellaneous Waste Storage Tank, Reactor Coolant Bleed Tanks, Laundry Waste Storage Tank, and Decay Heat Removal Coolers. These samples go directly to the sample sink. The Auxiliary Boilers sample points begin outside of containment, pass through coolers, which are cooled by the Closed Cycle Cooling Water System, and then go to the sample sinks. Turbine plant sample points from cycle makeup demineralizers, condensate pump discharge, and gland steam condenser inlet begin outside containment and go to the turbine plant sampling rack. Turbine plant sample points from condensate booster pump discharge, steam generator inlet, feedwater, steam generator secondary side, high pressure heater drains, heat drain collection tank, moisture separator drain pump discharge, and main steam first pass through coolers, and then go to the sampling rack. These coolers are cooled by the Closed Cycle Cooling Water System. Several Main Condenser sampling points are pumped to a separate sampling rack. Air-cooled chillers are also included in this system.

The Post Accident Sampling piping consists of a sample cylinder, expansion cylinder, piping, instrumentation, and a vacuum pump. This portion of the system is able to sample the Decay Heat Removal System.

For more detailed information, see UFSAR Section 9.2.2.

System Boundary

The Liquid and Gas Sampling (LGS) System boundary begins at the Steam Generator, Letdown Cooler, and Reactor Coolant System sample points. The system continues through

the containment isolation valves and containment penetration and ends at cooler inlet valves. The boundary also includes liquid sample piping from the sample station up to the sample hood isolation valves. The boundary includes the auxiliary boiler sample stations through the coolers to the drains. The boundary also includes the turbine sample points up to the sampling rack. The boundary includes Main Condenser sample points up to the sample rack. It also includes the flow path from the sample rack, through the chillers, and back to the sample rack. It also includes piping from the sample pump discharge back to the Main Condenser.

Piping and components downstream of the Sample Cooler inlet valves are not in scope because they do not perform an intended function, are not located near safety-related equipment, and are not required for structural support. The Post Accident Sampling piping and components are not in scope because they do not perform an intended function, are not located near safety-related equipment, and are not required for structural support. Sample piping inside the sample room and sample hood is not in scope because it does not perform an intended function, is not located near safety-related equipment, and is not required for structural support.

The boundary includes chiller piping from the sampling rack, through the chillers, and back to the sampling rack. The boundary also includes the piping to the air handlers, from the chillers up to the transition between the Turbine Building and the Control Building. Once in the Control Building, the piping is contained within walls and inside the Chemistry Lab, which does not have the potential to interact with safety-related equipment.

All associated piping, components, and instrumentation contained within the flow path described above is included in the system evaluation boundary.

Not evaluated in the scoping boundary is the instrument air, which is evaluated with the Instrument and Control Air System. Not evaluated in the scoping boundary is the cooling water side of the sample coolers, which is evaluated with the Closed Cycle Cooling Water System.

Not included in the LGS System License Renewal scoping boundary are the following interfacing systems, which are separately evaluated as License Renewal systems:

Closed Cycle Cooling Water System
Instrument and Control Air System

Reason for Scope Determination

The Liquid and Gas Sampling System meets 10 CFR 54.4(a)(1) because it is a safety-related system that is relied upon to remain functional during and following design basis events. The Liquid and Gas Sampling System meets 10 CFR 54.4(a)(2) because failure of nonsafety-related portions of the system could prevent satisfactory accomplishment of function(s) identified for 10 CFR 54.4(a)(1). The Liquid and Gas Sampling System also meets 10 CFR 54.4(a)(3) because it is relied upon in the safety analyses or plant evaluations to perform a function that demonstrates compliance with the Commission's regulations for Environmental Qualification (10 CFR 50.49) and Fire Protection (10 CFR 50.48). The Liquid and Gas Sampling System is not relied upon in any safety analyses or plant evaluations to perform a function that demonstrates compliance with the Commission's regulation for Anticipated Transient Without Scram (ATWS) (10 CFR 50.62), Station Blackout (10 CFR 50.63), or

Pressurized Thermal Shock (PTS) (10 CFR 50.61).

System Intended Functions

1. Provide primary containment boundary. The sample piping penetrates containment and the isolation valves serve as the containment boundary. 10 CFR 54.4(a)(1)
2. Resist nonsafety-related SSC failure that could prevent satisfactory accomplishment of a safety-related function. Portions of the system have the potential for spatial interaction or structural support. Portions of the sample piping connected to the Main Condenser are required to maintain the Main Condenser vacuum boundary. 10 CFR 54.4(a)(2)
3. Relied upon in safety analyses or plant evaluations to perform a function that demonstrates compliance with the Commission's regulations for Fire Protection (10 CFR 50.48). Sample valves are required to close during a fire. 10 CFR 54.4(a)(3)
4. Relied upon in safety analyses or plant evaluations to perform a function that demonstrates compliance with the Commission's regulations for Environmental Qualification (10 CFR 50.49). Containment isolation valves are part of the EQ program. 10 CFR 54.4(a)(3)

UFSAR References

Table 5.3-2
Table 7.1-2
9.2.2

License Renewal Boundary Drawings

LR-302-081
LR-302-175
LR-302-181
LR-302-182
LR-302-671

Table 2.3.3-17 Liquid and Gas Sampling System
Components Subject to Aging Management Review

Component Type	Intended Functions
Bolting	Mechanical Closure
Heat exchanger components (Auxiliary Boiler Sample Rack Coolers)	Leakage Boundary
Piping and fittings	Leakage Boundary
Piping and fittings	Pressure Boundary
Pump Casing (All Condenser Sample Pumps)	Pressure Boundary
Valve Body	Leakage Boundary
Valve Body	Pressure Boundary

The aging management review results for these components are provided in:

Table 3.3.2-17 Liquid and Gas Sampling System
Summary of Aging Management Evaluation

2.3.3.18 Miscellaneous Floor and Equipment Drains System

System Purpose

The Miscellaneous Floor and Equipment Drains (MFED) System consists of the following plant systems: Steam Generator Secondary Side Blowdown and Drains System, Sumps and Waste Collection, Turbine Building Sumps and Drains System, Auxiliary Building Sump and Drain System, Intermediate Building Sump, Circulating Water Pumphouse Sump, Air Intake Tunnel Sump, and Miscellaneous Sumps and Drains. The MFED System is an auxiliary system designed to provide drainage control and management to the plant. The MFED System is in scope for License Renewal. There are portions of the MFED System that are not in scope for License Renewal. The Sumps and Waste Collection and Circulating Water Pumphouse Sump plant systems are not in scope for License Renewal because they perform no intended functions.

The purpose of the MFED System is to provide drainage control and management to plant buildings and rooms, provide flood protection to equipment, and provide a flowpath for Once-Through Steam Generator (OTSG) sample blowdown to the Main Condenser.

The MFED System accomplishes this purpose by providing drains, drain flowpaths, sumps, sump pumps, and discharge flowpaths from buildings and rooms.

System Operation

The MFED System is comprised of piping, sump pumps, valves, and controls and instrumentation. Plant drains discharge waste liquid into sumps, where sump pumps transfer the waste liquid through piping to other systems where it is processed or discharged from the plant.

The Steam Generator hot drains provide drain paths for the steam generators. Cooling water for the Steam Generator Hot Drain Coolers is supplied by the Closed Cycle Cooling Water System.

Level switches in the floor drains in each Decay Heat Vault identify leakage in Decay Heat piping, so that the leaking train may be isolated to protect the other train during long-term post-accident cooling.

For more detailed information, see UFSAR Sections 4.2, 5.3, 6.0, 6.4.5, 6B, 9.2.1.4, 9.2.2, 9.9.3.3, 9.9.5.4, 9.9.6, 10.4.5, and 11.2.

System Boundary

The MFED boundary begins at the Turbine Sump and Deluge Pumps, Auxiliary Boiler Blowdown Sump Pumps, and the Industrial Cooler Continuous Blowdown Collection Sump Pumps. The system continues through the discharge piping to the connection with the Open Cycle Cooling Water System discharge piping. The system also includes from the Auxiliary Boiler Blowdown Receiver outlet to the Industrial Cooler Continuous Blowdown Sump. It also includes piping up to the Unit 1/2 Condensate crosstie valve, up to the piping transition between Units 1 and 2, and up to the chemical cleaning isolation valve and the Powdex outlet header valve to the Turbine Sump. The system also continues up to the Waste Collection Sump. The Industrial Coolers are evaluated with the Closed Cycle Cooling Water System.

The Powdex units are evaluated with the Condensate System. The Auxiliary Boilers are evaluated with the Auxiliary Steam System.

The boundary includes the Intermediate Building Sump Pumps and the discharge piping through the pump discharge isolation valves. The boundary includes the Air Intake Tunnel Sump Pumps and the discharge piping through the pump discharge isolation valves.

The boundary includes the Tendon Access Gallery Sump Pumps and discharge piping to the Auxiliary Building Sump. The boundary includes the Spent Fuel Pit Room Sump Pumps, Borated Water Tank Tunnel Sump Pumps, and Heat Exchanger Vault Sump Pumps and discharge piping to the Auxiliary Building Sump. The boundary also includes piping from the Makeup Tank drain valve, the Seal Return Cooler drain valve, and seal return filter outlet valve to the Auxiliary Building Sump. The Seal Return Coolers and drain piping are evaluated with the Makeup and Purification System. The boundary also includes the Decay Heat Pump cubicle leak detectors and Tendon Access Gallery level receiver.

The system includes piping from the Waste Evaporator Condensate Pump discharge valve to the Turbine Building wall. The system also contains piping from the liquid sampling discharge connection to the Auxiliary Building Sump.

The system includes piping from the OTSG annulus drain valves and main steam header drain valves, through the Steam Generator Hot Drain Coolers, through the Steam Generator Drain Pump, to the Turbine Sump, through the containment penetration, and up to the Main Condenser. It also includes piping up to the OTSG drain inlet valves and the OTSG blowdown isolation valves. Piping to the OTSGs is evaluated with the Feedwater System. The OTSG drain valves are evaluated with the Main Steam System.

The system includes the Auxiliary Building Sump Pumps, discharge piping through the Miscellaneous Radioactive Waste Storage Tank isolation valve. The Miscellaneous Radioactive Waste Storage Tank is evaluated with the Radwaste System.

The Circulating Water House Sump Pumps and associated discharge piping are not in scope for License Renewal.

All associated piping, components and instrumentation contained within the flow path described above are included in the system evaluation boundary.

Not included in the MFED System scoping boundary is the cooling water side of the Steam Generator Hot Drain Coolers, which is evaluated with the Closed Cycle Cooling Water System. The Main Condenser is evaluated with the Condensers and Air Removal System.

Not included in the MFED System License Renewal scoping boundary are the following interfacing systems, which are separately evaluated as License Renewal systems:

Auxiliary Steam System
Closed Cycle Cooling Water System
Condensate System
Condensers and Air Removal System
Decay Heat Removal System
Feedwater System
Main Steam System

Makeup and Purification System
Open Cycle Cooling Water System
Radwaste System
Reactor Building Spray System

Reason for Scope Determination

The Miscellaneous Floor and Equipment Drains System meets 10 CFR 54.4(a)(1) because it is a safety-related system that is relied upon to remain functional during and following design basis events. The Miscellaneous Floor and Equipment Drains System meets 10 CFR 54.4(a)(2) because failure of nonsafety-related portions of the system could prevent satisfactory accomplishment of function(s) identified for 10 CFR 54.4(a)(1). The Miscellaneous Floor and Equipment Drains System is relied upon to perform a function that demonstrates compliance with the Commission's regulation for Fire Protection (10 CFR 50.48). The Miscellaneous Floor and Equipment Drains System is not relied upon in any safety analyses or plant evaluations to perform a function that demonstrates compliance with the Commission's regulation for Anticipated Transient Without Scram (10 CFR 50.62), Environmental Qualification (10 CFR 50.49), Pressurized Thermal Shock (10 CFR 50.61), or Station Blackout (10 CFR 50.63).

System Intended Functions

1. Remove residual heat from the reactor coolant system. The level switches in the Decay Heat Pump cubicle detect a leaking train, which then must be isolated to protect the remaining train during post-accident long-term cooling. 10 CFR 54.4(a)(1)
2. Provide primary containment boundary. The Miscellaneous Floor and Equipment Drains System penetrates the Reactor Building and includes containment isolation valves. 10 CFR 54.4(a)(1)
3. Resist nonsafety-related SSC failure that could prevent satisfactory accomplishment of a safety-related function. Floor drains and sumps are required to prevent flooding in plant rooms and areas. There is also the potential for spatial interaction with safety-related equipment. 10 CFR 54.4(a)(2)
4. Relied upon in safety analyses or plant evaluations to perform a function that demonstrates compliance with the Commission's regulations for Fire Protection (10 CFR 50.48). Floor drains and sumps are required to accommodate all water discharged by the Fire Protection System. 10 CFR 54.4(a)(3)

UFSAR References

4.2
5.3
6.0
6.4.5
6B
9.2.1.4
9.2.2
9.9.3.3
9.9.5.4
9.9.6
10.4.5

11.2

License Renewal Boundary Drawings

LR-302-011
LR-302-159
LR-302-165
LR-302-166
LR-302-172
LR-302-196
LR-302-202
LR-302-352
LR-302-660
LR-302-661
LR-302-671
LR-302-690
LR-302-693
LR-302-719

Table 2.3.3-18 Miscellaneous Floor and Equipment Drains System
Components Subject to Aging Management Review

Component Type	Intended Functions
Bolting	Mechanical Closure
Filter Housing	Pressure Boundary
Flow Device	Leakage Boundary
Flow Device	Pressure Boundary
Flow Element	Leakage Boundary
Flow Element	Pressure Boundary
Heat exchanger components (OSTG Drn Cooler)	Pressure Boundary
Piping and fittings	Leakage Boundary
Piping and fittings	Pressure Boundary
Pump Casing (Air Tunnel Sump)	Pressure Boundary
Pump Casing (Aux Building Sump)	Pressure Boundary
Pump Casing (Borated Water Tank Tunnel Sump)	Leakage Boundary
Pump Casing (Heat Exchanger Vault Sump)	Leakage Boundary
Pump Casing (Industrial Cooler Continuous Blowdown)	Leakage Boundary
Pump Casing (Intermediate Building Sump)	Pressure Boundary
Pump Casing (Spent Fuel Pit Room Sump)	Pressure Boundary
Pump Casing (Steam Generator Drain)	Leakage Boundary
Pump Casing (Tendon Access Gallery Sump)	Pressure Boundary
Pump Casing (Turbine Condenser Sump)	Pressure Boundary
Pump Casing (Turbine Deluge Sump)	Pressure Boundary
Spectacle Blinds	Pressure Boundary
Strainer Body	Leakage Boundary
Tanks (Industrial Cooler Continuous Blowdown Collection)	Leakage Boundary
Tanks (OTSG Wet Layup Chem Addition)	Leakage Boundary
Tanks (Various Floor Sumps)	Pressure Boundary
Valve Body	Leakage Boundary
Valve Body	Pressure Boundary
Valve Discharge Target	Leakage Boundary

The aging management review results for these components are provided in:

Table 3.3.2-18 Miscellaneous Floor and Equipment Drains System
Summary of Aging Management Evaluation

2.3.3.19 Open Cycle Cooling Water System

System Purpose

The Open Cycle Cooling Water (OCCW) System consists of the Mechanical Draft Cooling Towers, Nuclear Service River Water System, Secondary Services Cooling Water System, Decay Heat River System, Screen Wash and Sluice System, Screen House Ventilation System, and River Water Pump Lubrication System. The OCCW System is an auxiliary system designed to provide cooling water from the Susquehanna River to several plant components. The OCCW System is in scope for License Renewal. However, portions of the OCCW System are not required to perform intended functions and are not in scope. The OCCW System has several interfaces with other systems that are not in the License Renewal boundary of the OCCW System.

The purpose of the OCCW System is to circulate cooling water from the river through both safety-related and nonsafety-related heat exchangers and back to the river.

The OCCW System accomplishes this purpose by providing screened river water to the river water pump suctions and then circulating river water through the Nuclear Service Closed Cooling Water Heat Exchangers, Intermediate Service Closed Cooling Water Coolers, Decay Heat Service Coolers, Secondary Services Heat Exchangers, and Screen House Ventilation Equipment.

The Nuclear Service River Water, Secondary Services Cooling Water, Screen Wash and Sluice, Screen House Ventilation, and River Water Pump Lubrication Systems are normally in operation. The Decay Heat River System is normally in operation during plant shutdown and is used part time during normal plant operation to augment the dilution of plant effluents. The Decay Heat River System will actuate automatically upon receipt of an Engineered Safeguards Actuation signal and operate in the same way as for normal operation. Nuclear Services River Water will receive an automatic start signal when the Engineered Safeguards System actuates. During a loss of Nuclear Services River Water, a cross connection with Secondary Services Cooling Water, requiring manual operator action, can provide cooling to the Nuclear Services River Water heat loads.

System Operation

The OCCW System is comprised of bar rakes, traveling screens, river water pumps, strainers, piping and components, heat exchangers, and instrumentation and control. The river water pumps are the Decay Heat River, Nuclear Service River Water, Secondary Service Cooling Water, and Screen House Ventilation Cooling Water Pumps.

Automatic Bar Rakes remove the initial large debris from the river water at the entrance to the Intake Screen and Pump House (ISPH). Collected debris is removed automatically by a power driven rake, which lifts trash up the front of the vertical bars and dumps the trash into a trough. Traveling screens are located just after the automatic bar rakes. Small size openings in the traveling screens catch debris that has passed through the bar rakes. The traveling screens are cleaned by pumped river water that is strained and then sprayed on the screens.

The screened water then enters the river water pumps, flows through strainers, valves, and piping. This river water then flows from the ISPH through an underground concrete pipe to the

Heat Exchanger Vault in the Auxiliary Building, or to the Turbine Building. After entering the Heat Exchanger Vault or Turbine Building, the flow continues through the tube side of the heat exchangers, and discharges through a common river discharge line. Secondary Services Cooling Water is directed via underground pipe from the Heat Exchanger Vault to the Secondary Services Heat Exchangers in the Turbine Building. The flow continues through the tube side of the heat exchangers to the common river discharge line. The common river discharge line flows to the hot water basin of the Mechanical Draft Cooling Towers (MDCTs) and then back to the river.

Well water for the River Water Pump Lubrication (RWPL) System is provided to each river water pumps' bearings to reduce wear. The river pump bearings receive adequate lubrication from river water to maintain the river pumps operable for the duration of postulated accident events without the RWPL System. The loss of the RWPL System has no impact on safety-related equipment performance and the RWPL System power connections are isolated from safety-related power supplies.

The Decay Heat River System comprises two separate 100 percent capacity river water pumps and associated piping and cools the Decay Heat Service Coolers. The Nuclear Service River Water System is comprised of three 50 percent capacity river water pumps and associated piping and cools the Nuclear Service Heat Exchangers and the Intermediate Coolers. Three Secondary Services Cooling River Water Pumps deliver river water to the Secondary Services Heat Exchangers.

The emergency operation of the Decay Heat RiverSystem is the same as that for normal operation. The pumps in both trains start automatically upon receipt of the Emergency Safeguards signal that starts the Decay Heat Removal System.

There is a Nuclear Services River Water cross connect with the Secondary Services Cooling Water located in both the ISPH and the Heat Exchanger Vault. In an emergency, river water to the Intermediate Coolers can be shut off and the additional flow made available to the Nuclear Service Heat Exchangers. As an additional backup, Nuclear Service River Water can be supplemented by the Secondary Services Cooling Water Pumps. The NSRW System is normally operating and is automatically started and placed in operation when there is a Loss of Coolant Accident (LOCA).

Operation of the MDCT to provide cooling was permanently discontinued based on an evaluation of discharge temperature and approved by the Pennsylvania Department of Environmental Protection. The fill portion of the MDCT was dismantled and removed. The plant discharge flows directly through the MDCT basin. In the unlikely event the basin flow path should become plugged, flow is designed to back up to a high point and flow by gravity to the East Channel of the river. In addition, blockage of the flow path from the MDCT to the river via the Effluent Monitoring Pit would result in a discharge to the river via the MDCT basin emergency overflow.

For more detailed information, see UFSAR Sections 9.6 and 9.8.8.

System Boundary

The OCCW System boundary begins at the ISPH bar racks. The system continues through the traveling screens, river water pumps and strainers underground into the Heat Exchanger Vault and Turbine Building. The system continues through the heat exchangers and continues to the

common river discharge line. The system continues through the river discharge line in both directions to the East Dike and through the MDCT basin, radiation monitor pit, and to discharge at the river. The boundary also includes the radiation monitor pit pump, associated piping and valves, and radiation monitor. The boundary includes discharge piping through but not including the East Dike.

The boundary includes the Screen House Ventilation Equipment pumps, strainers, piping, through the vent equipment, to the ISPH. The Screen House Ventilation cooling coils are evaluated with the Intake Screen and Pump House Ventilation System. The boundary also includes the Screen Wash pumps, through the pump discharge strainers, traveling water screens, auto bar rakes, to the sluice canal. The boundary includes the river pump strainer backwash discharges to the river.

The boundary includes the piping beginning downstream of the lube water supply valves, to the river water pumps.

All associated piping, components and instrumentation contained within the flow path described above are included in the system evaluation boundary.

The Secondary Services Cooling Water System (SSRW) is in scope for portions of the system in the ISPH for spatial interaction with other safety-related equipment in that building. The pump discharge piping, upon exit of the ISPH, runs underground until it enters the Heat Exchanger Vault. The Secondary Services Cooling Water piping in the Heat Exchanger Vault is in scope for spatial and structural interactions. The Secondary Services Cooling Water piping then exits the Heat Exchanger Vault through the wall, and proceeds underground to just outside the Turbine Building, where it rises above ground, then enters the Turbine Building to interface with the Secondary Services Heat Exchangers. Also, the piping downstream of the Turbine Building entrance is not in scope because there is no spatial or structural interaction. However, once the Secondary Services Cooling Water discharge piping connects with the Circulating Water blowdown line in the Turbine Building, the piping is in scope for functional support and connects to the main discharge line. The Secondary Services Heat Exchangers are not in scope because they do not spatially interact with safety-related equipment. The Secondary River underground pipe shares a thrust block with the Reactor Building Emergency Cooling piping of the Primary Containment Heating and Ventilation System and is considered for spatial interaction while underground.

Not included in the OCCW License Renewal scoping boundary are the following interfacing systems, which are separately evaluated as License Renewal systems:

Circulating Water System
Dike/Flood Control System
Intake Screen and Pump House Ventilation System
Miscellaneous Floor and Equipment Drains System
Primary Containment Heating and Ventilation System
Water Treatment and Distribution System

Reason for Scope Determination

The Open Cycle Cooling Water (OCCW) System meets 10 CFR 54.4(a)(1) because it is a

safety-related system that is relied upon to remain functional during and following design basis events. It meets 10 CFR 54.4(a)(2) because failure of nonsafety-related portions of the system could prevent satisfactory accomplishment of function(s) identified for 10 CFR 54.4(a)(1). The Open Cycle Cooling Water System is relied upon to perform a function that demonstrates compliance with the Commission's regulation for Fire Protection (10 CFR 50.48) and Station Blackout (10 CFR 50.63). The Open Cycle Cooling Water System is not relied upon in any safety analyses or plant evaluations to perform a function that demonstrates compliance with the Commission's regulation for Environmental Qualification (10 CFR 50.49), Anticipated Transient Without Scram (10 CFR 50.62), or Pressurized Thermal Shock (10 CFR 50.61).

System Intended Functions

1. Provide heat removal from safety-related equipment. Provides cooling water for safety-related closed cooling water systems. 10 CFR 54.4(a)(1)
2. Resist nonsafety-related SSC failure that could prevent satisfactory accomplishment of a safety-related function. 10 CFR 54.4(a)(2)
3. Relied upon in safety analyses or plant evaluations to perform a function that demonstrates compliance with the Commission's regulations for Fire Protection (10 CFR 50.48). Decay Heat cooling, letdown cooling, and makeup pump cooling are required for this event. 10 CFR 54.4(a)(3)
4. Relied upon in safety analyses or plant evaluations to perform a function that demonstrates compliance with the Commission's regulations for Station Blackout (10 CFR 50.63). NSRW provides de-icing protection during an event. 10 CFR 54.4(a)(3)

UFSAR References

9.6.1
9.6.2
9.8.8.3

License Renewal Boundary Drawings

LR-302-202
LR-302-203
LR-302-201

Table 2.3.3-19 Open Cycle Cooling Water System
Components Subject to Aging Management Review

Component Type	Intended Functions
Bolting	Mechanical Closure
Expansion Joints	None - Short Lived
Heat exchanger components (Decay Heat Service Closed Cooling)	Heat Transfer
Heat exchanger components (Decay Heat Service Closed Cooling)	Pressure Boundary
Heat exchanger components (Intermediate Closed Cooling)	Heat Transfer
Heat exchanger components (Intermediate Closed Cooling)	Pressure Boundary
Heat exchanger components (ISPH Ventilation Cooling Coils)	Leakage Boundary
Heat exchanger components (Nuclear Service Closed Cooling Water)	Heat Transfer
Heat exchanger components (Nuclear Service Closed Cooling Water)	Pressure Boundary
Piping and fittings	Leakage Boundary
Piping and fittings	Pressure Boundary
Pump Casing (Decay Heat River Water)	Pressure Boundary
Pump Casing (Nuclear Service)	Pressure Boundary
Pump Casing (Screen Wash)	Leakage Boundary
Pump Casing (Secondary Service)	Leakage Boundary
Pump Casing (Service Water Vent Equipment)	Leakage Boundary
Restricting Orifices	Pressure Boundary
Strainer Body	Leakage Boundary
Strainer Body	Pressure Boundary
Valve Body	Leakage Boundary
Valve Body	Pressure Boundary

The aging management review results for these components are provided in:

Table 3.3.2-19 Open Cycle Cooling Water System
Summary of Aging Management Evaluation

2.3.3.20 Radiation Monitoring System

System Purpose

The Radiation Monitoring (RM) System consists of the following plant systems: Radiation Monitoring and Sampling System and Post Accident Monitoring System.

The RM System is an auxiliary system designed to detect, indicate, annunciate, and record radiation levels at selected locations inside and outside the plant. It also provides interlock signals to support intended functions on high radiation level detection. The RM System is in scope for License Renewal. The RM System accomplishes this purpose through area, atmospheric, and liquid radiation monitors.

Area monitoring consists of twenty-four channels which perform personnel, process, and effluent monitoring functions. Area monitors are single, self-contained detector units with no associated sampling or detection piping and components. Area monitors detect radiation levels inside the Reactor Building, Auxiliary Building, Control Tower, and Fuel Handling Building. RM-G-9 Fuel Handling Building Area Monitor is nonsafety-related and provides an isolation signal for the Fuel Handling Building Ventilation System. They also monitor Once Through Steam Generators, reactor coolant, Reactor Coolant Pump seal return, and Reactor Coolant Drain Tank Pump discharge.

RM-G-9 is a nonsafety-related area monitor that supports an intended function of isolating the Fuel Handling Building Ventilation System. It provides an interlock signal on high radiation level indication. The other area monitors do not support intended functions and their failure would not prevent safety-related components or systems from performing their intended functions.

Atmospheric monitoring consists of fifteen channels which provide effluent monitoring, emergency release monitoring, and in-plant air monitoring. Channels are located inside and outside the plant. Atmospheric monitors detect radiation levels in the Control Tower air intake, Reactor Building air sample line, Fuel Handling Building exhaust ventilation duct, Condenser Vacuum Pump exhaust, waste gas discharge, Auxiliary and Fuel Handling Building exhaust, Reactor Building purge exhaust, Radiochemical Laboratory, Fuel Handling Building Emergency Safety Features Ventilation System exhaust, Chemical Cleaning Building ventilation exhaust, Waste Handling and Packing Facility (WHPF) exhaust, and the Respirator Cleaning and Laundry Maintenance (RLM) Facility exhaust.

Atmospheric monitors have associated sampling and detection piping and components. The Control Tower Air Intake Channel (RM-A1) is nonsafety-related and supports an intended function of maintaining Control Room habitability by placing the Control Room Ventilation system in recirculation mode. The Fuel Handling Building Exhaust Ventilation Duct Channel (RM-A-4) and the Reactor Building Purge Exhaust Channel (RM-A-9) are nonsafety-related and sense process conditions and generate signals to isolate ventilation systems. The Fuel Handling Building ESF Ventilation System Exhaust Channel (RM-A-14) is nonsafety-related and supports and intended function of removing radioactive material from the atmosphere of confined spaces outside primary containment by isolating the ventilation system. The other atmospheric monitors do not support intended functions and their failure would not prevent safety-related components or systems from performing their intended functions.

Liquid monitoring consists of nine liquid monitors which provide effluent monitoring, leak detection, and monitoring of the Reactor Coolant System activity. Liquid monitors detect radiation levels of closed cooling loops, Spent Fuel Pool water, reactor coolant letdown, liquid wastewater prior to dilution by the Mechanical Draft Cooling Tower basin, discharge to the river, and Industrial Waste Treatment discharge.

Liquid monitors and associated sampling and detection piping and components are not included in the scope of this system and are evaluated with the License Renewal system associated with the process fluid (i.e., Closed Cycle Cooling Water System, Makeup and Purification System, and Spent Fuel Cooling System).

Post-accident radiation monitoring consists of high-range effluent monitors for extended ranges to area radiation monitors, high-range containment radiation monitors to monitor containment radiation levels during and following a postulated accident. The high range containment radiation monitors perform an intended function and are in the scope of License Renewal. Post-accident sampling is also present to better define long-term recovery operations. This determines key parameters such as containment atmosphere spectra. Hydrogen monitoring is evaluated separately with the Hydrogen Monitoring System.

System Operation

The Radiation Monitoring (RM) System consists of piping and piping components, radiation monitors, pumps, filters, and instrumentation and control.

The area, atmospheric, and liquid monitors use gamma-sensitive ionization chambers, scintillation detectors, particulate/iodine/gas (PIG) monitors, and Geiger-Mueller (GM) detectors. Each monitor or common group of monitors has a process loop which draws the air or liquid sample from the sample point, flows through the detectors and monitors, a filter, and finally back to the process system through a sample return point. The area monitors, however, are passive.

For more detailed information, see UFSAR Section 11.4.

System Boundary

The Radiation Monitoring (RM) System boundary begins at the Post-accident Monitoring piping end connections inside the Reactor Building and continues through the containment penetrations. This portion of the system is safety-related to the first branch valves. Beyond these valves, the piping is nonsafety-related and in-scope to the first equivalent anchor.

The portion of the Post-accident Monitoring flowpath beyond the first equivalent anchor is not in scope for License Renewal because that portion of the system does not perform an intended function.

Piping and components for RM-A-1, RM-A-4, RM-A-6, RM-A-8, RM-A-9, RM-A-14, and RM-G-9 are included in scope. For each monitor, the system boundary begins at the sample piping connection to the main process system, continues through the detectors, and returns to the process system.

All associated piping, components and instrumentation contained within the flow path described above are included in the system evaluation boundary.

The scope of this system includes the mechanical portions of the system. Signals from the detectors that provide inputs for isolation and interlock functions are not included in the scope of this system and are evaluated with the Electrical Commodities System.

Not evaluated in the scoping boundary is the containment hydrogen monitoring function, which is evaluated with the Hydrogen Monitoring System. Also not evaluated in the scoping boundary are the Letdown Flow Radiation Monitor, which is evaluated with the Makeup and Purification System. Not evaluated in the scoping boundary are the Decay Closed and Nuclear Service Closed System Inline Radiation Monitors, which are evaluated with the Closed Cycle Cooling Water System.

Not included in the RM System License Renewal scoping boundary are the following interfacing systems, which are separately evaluated as License Renewal systems:

Auxiliary and Fuel Handling Building Ventilation System
Closed Cycle Cooling Water System
Control Building Ventilation System
Hydrogen Monitoring System
Makeup and Purification System

Reason for Scope Determination

The Radiation Monitoring System meets 10 CFR 54.4(a)(1) because it is a safety-related system that is relied upon to remain functional during and following design basis events. The Radiation Monitoring System meets 10 CFR 54.4(a)(2) because failure of nonsafety-related portions of the system could prevent satisfactory accomplishment of function(s) identified for 10 CFR 54.4(a)(1). The Radiation Monitoring System also meets 10 CFR 54.4(a)(3) because it is relied upon in the safety analyses or plant evaluations to perform a function that demonstrates compliance with the Commission's regulations for Environmental Qualification (10 CFR 50.49). The Radiation Monitoring System is not relied upon in safety analyses or plant evaluations to perform a function that demonstrates compliance with the Commission's regulations for Anticipated Transient Without Scram (ATWS) (10 CFR 50.62), Fire Protection (10 CFR 50.48), Station Blackout (10 CFR 50.63) or Pressurized Thermal Shock (PTS) (10 CFR 50.61).

System Intended Functions

1. Provide primary containment boundary. Sample piping and valves provide the containment isolation. 10 CFR 54.4(a)(1)
2. Resist nonsafety-related SSC failure that could prevent satisfactory accomplishment of a safety-related function. Radiation monitors and associated piping sense conditions, process signals, and maintain pressure boundary to support monitor interlock functions with the Control Building Ventilation System, Auxiliary and Fuel Handling Building Ventilation Systems, and the Reactor Building Purge System. Nonsafety-related piping is attached and provides physical support to safety-related piping. 10 CFR 54.4(a)(2)
3. Relied upon in safety analyses or plant evaluations to perform a function that demonstrates compliance with the Commission's regulations for Environmental Qualification (10 CFR 50.49). The RM System has containment isolation valves which are part of the EQ program, as well as RM-G-22/23. 10 CFR 54.4(a)(3)

UFSAR References

4.2.3.8
5.3.2
7.3.2.2
Table 7.3-2
Table 7.3-3
7.4.2.1
9.1.2
9.2.2.5
9.3.2.5
9.4.6
9.6.2.1
9.8.1.5
9.8.2
9.8.3
10.3.3.2
11.2.1.3
11.4
14.2.2.1

License Renewal Boundary Drawings

LR-302-721
LR-302-730
LR-302-833 Sht. 1
LR-302-841
LR-302-842

Table 2.3.3-20 Radiation Monitoring System
Components Subject to Aging Management Review

Component Type	Intended Functions
Bolting	Mechanical Closure
Filter Housing	Pressure Boundary
Piping and fittings	Leakage Boundary
Piping and fittings	Pressure Boundary
Pump Casing (All Sample Pumps)	Pressure Boundary
Valve Body	Pressure Boundary

The aging management review results for these components are provided in:

Table 3.3.2-20 Radiation Monitoring System
Summary of Aging Management Evaluation

2.3.3.21 Radwaste System

System Purpose

The Radwaste System is a normally operating liquid, solid, and gaseous radioactive waste management system. The Radwaste System consists of several plant systems including the Gaseous Waste Disposal System, the Liquid Radwaste Disposal System, the Solid Radwaste Disposal System, the Processed Water System, and the Incore Detector Disposal System.

The purpose of the Radwaste System is to manage radioactive waste produced as a result of plant operation. The Radwaste System accomplishes this by collecting, processing, and preparing for disposal potentially radioactive liquid, gaseous, and solid wastes. The Radwaste System is designed and constructed to meet or exceed the applicable federal regulations for the containment, control, and release or disposal of radioactive liquids, gases, and solids generated as a result of normal and emergency operation of the plant.

The Radwaste System includes Reactor Building isolation valves and piping to assure that radioactive material is not inadvertently transferred out of the Reactor Building, and, it includes valves for, or associated with, flowpaths required for safe shutdown. The Radwaste System collects, contains, and suppresses steam relief from the Reactor Coolant System Pressurizer PORV and code safety valves.

System Operation

The Radwaste System consists of the Gaseous Waste Disposal System, the Liquid Radwaste Disposal System, the Solid Radwaste Disposal System, the Processed Water System, and the Incore Detector Disposal System.

The Gaseous Waste Disposal System provides for the collection, storage, and processing of gases evolved from reactor coolant in all tanks or items of equipment where this might occur. The Gaseous Waste Disposal System consists of a waste gas header system with one section located in the Reactor Building and another section located in the Auxiliary Building. Condensing water vapor or liquids entering the section of the vent header system within the Reactor Building drain to the Reactor Coolant Drain Tank, while those entering the vent header system within the Auxiliary Building drain to the Miscellaneous Radioactive Waste Storage Tank. The vent header from the Reactor Coolant Drain Tank discharges to the Miscellaneous Radioactive Waste Storage Tank. The gas spaces of the Miscellaneous Radioactive Waste Storage Tank and the three Reactor Coolant Bleed Tanks are joined as an intermediate gas storage volume which discharges the gases they collect to the suction of the waste gas compressors via an intermediate Waste Gas Delay Tank. The compressed gas portion of the waste gas system consists of the waste gas compressors, Separator Tanks, and three Waste Gas Decay Tanks. The Waste Gas Decay Tanks are designed to provide storage for gases during normal operation prior to release to the atmosphere. Except for initiating tank sampling, waste gas venting, and the recycle or disposal of compressed waste gases stored in the Waste Gas Decay Tanks, the operation of the Gaseous Waste Disposal System is entirely automatic. The Gaseous Waste Disposal System also includes Reactor Building isolation valves and piping to assure that radioactive material is not inadvertently transferred out of the Reactor Building.

The Liquid Radwaste Disposal System provides for the collection, containment, and processing

of miscellaneous liquid wastes for reuse, release, or disposal. The Liquid Radwaste Disposal System provides service functions to the Reactor Coolant System and Spent Fuel Pools including: chemical and volume control for the Reactor Coolant System; Pressurizer relief suppression, containment, and collection; Reactor Coolant System drain and fill operations; spent fuel pool water cleanup; reactor coolant and refueling water processing; spent fuel pool water processing. The Liquid Radwaste Disposal System also provides miscellaneous functions including: miscellaneous waste processing (radioactive laboratory drains, building and equipment drains and sumps, regeneration of deborating resins, discharge of spent resins from demineralizers, and discharge of used precoat from precoat filters); radioactive shower drain waste processing; collection, containment, and sampling of potentially contaminated oil. The Liquid Radwaste Disposal System consists of two (2) trains. One train provides service functions to the Reactor Coolant System and the spent fuel pools and includes the Reactor Coolant Drain Tank, Reactor Coolant Drain Tank Heat Exchanger, Reactor Coolant Drain Tank Pump, Reactor Drain Pump, Reactor Coolant Bleed Tanks, Waste Transfer Pumps, Reactor Coolant Waste Evaporator, Reclaimed Boric Acid Tanks and Boric Acid Recycle Pumps, Deborating Demineralizers, Precoat Filters, and Cation Demineralizers. This train includes Reactor Building isolation valves and piping to assure that radioactive material is not inadvertently transferred out of the Reactor Building, and, it includes a safe shutdown letdown flowpath to the Reactor Coolant Bleed Tanks if Makeup Tank overfilling is imminent. The second train provides storage, treatment, and/or concentration for reuse or disposal for all other miscellaneous radioactive wastes and includes the Miscellaneous Radioactive Waste Storage Tank and Miscellaneous Waste Transfer Pumps, Miscellaneous Waste Evaporator, Concentrate Waste Storage Tanks and Concentrate Radwaste Pumps, Waste Oil Storage Tank, Laundry Waste Storage Tank, Neutralizer Mixing Tank, Neutralizer Feed Tank, Neutralized Waste Storage Tank and Neutralizer Pumps, Spent Resin Storage Tank, Used Precoat Tank, Slurry and Decant Pumps, Evaporator Condensate Demineralizers, Waste Evaporator Condensate Storage Tanks and Evaporator Condensate Pumps, Waste Concentrators (Evaporators), Waste Evaporator Vacuum Pumps, Distillate Pumps Waste Feed Tanks and Feed Pumps, Liquid Radwaste Disposal Chemical Mix Tank, and associated coolers and heat exchangers.

The Solid Radwaste Disposal System provides for the packaging of radioactive solid and concentrated liquid wastes for transportation to an offsite processor or to the ultimate disposal site. Five (5) general types of waste are produced, processed, and shipped from the site as solid radioactive waste: concentrated liquid waste (evaporator bottoms); used precoat (spent powdered resin); spent resin (bead type); dry compacted trash; and dry noncompactable trash. The Solid Radwaste Disposal System consists of an interim mobile dewatering and solidification system located outside of the Auxiliary Building. The Solid Radwaste Disposal System also includes equipment for baling, transferring, and compacting solid radioactive waste.

The Processed Water System provides for storage of condenser water once the condenser has cooled sufficiently after shutdown. The Processed Water System consists of two (2) Processed Water Storage Tanks, two (2) Processed Water Transfer Pumps, and associated piping and instrumentation. Once the condenser has cooled sufficiently after shutdown, the condensate pump can be used to transfer condensate to a Processed Water Storage Tank via the TMI-1/2 condensate cross-connect line. As level drops in the condenser, alternate pump(s) may be used in place of the condensate pump. Water from one Processed Water Storage Tank can be pumped, via the Processed Water Storage Tank pumps, to the Chemical Cleaning Building for processing and returned to the other Processed Water Storage Tank, back to the condenser, or to the condensate overboard line for discharge. Normal operation of the system

is on a batch mode basis. After one Processed Water Storage Tank has received a batch, it is isolated and the contents are recirculated and sampled. Based on the results of the sample and the needs of the plant for returned water, the contents are released or recycled. Water in the Turbine Building sump may also be transferred to the Processed Water Storage Tanks via jumper from the Turbine Building sump pump(s) to the interconnecting piping.

The Incore Detector Disposal System provides for the removal, processessing and disposal of incore detectors. The Incore Detector Disposal System consists of a jib crane, shielded transfer cask, cutter shield, cutter, vacuum system, and disposal vaults.

For more detailed information, see UFSAR Section 11.0.

System Boundary

The Gaseous Waste Disposal System portion of the Radwaste System License Renewal scoping boundary begins at the Reactor Coolant Drain Tank and continues through the waste gas header to the Miscellaneous Radioactive Waste Storage Tank. From the Miscellaneous Radioactive Waste Storage Tank, the scoping boundary continues through three (3) Reactor Coolant Bleed Tanks, the Waste Gas Delay Tank, two (2) waste gas compressors, two (2) Separator Tanks, and three (3) Waste Gas Decay Tanks. Included in this boundary are two (2) Reactor Building isolation valves. The Gaseous Waste Disposal System portion of the Radwaste System License Renewal scoping boundary terminates at the Auxiliary and Fuel Handling Building Ventilation System.

The Liquid Radwaste Disposal System portion of the Radwaste System License Renewal scoping boundary includes the Reactor Coolant Drain Tank, Reactor Coolant Drain Tank Heat Exchanger, Reactor Coolant Drain Tank Pump, Reactor Drain Pump, Reactor Coolant Bleed Tanks, Waste Transfer Pumps, Reactor Coolant Waste Evaporator, Reclaimed Boric Acid Tanks and Boric Acid Recycle Pumps, Deborating Demineralizers, Precoat Filters, Cation Demineralizers, Miscellaneous Radioactive Waste Storage Tank and Miscellaneous Waste Transfer Pumps, Miscellaneous Waste Evaporator, Concentrate Waste Storage Tanks and Concentrate Radwaste Pumps, Waste Oil Storage Tank, Laundry Waste Storage Tank, Neutralizer Mixing Tank, Neutralizer Feed Tank, Neutralized Waste Storage Tank and Neutralizer Pumps, Spent Resin Storage Tank, Used Precoat Tank, Slurry and Decant Pumps, Evaporator Condensate Demineralizers, Waste Evaporator Condensate Storage Tanks and Evaporator Condensate Pumps, Waste Concentrators (Evaporators), Waste Evaporator Vacuum Pumps, Distillate Pumps Waste Feed Tanks and Feed Pumps, Liquid Radwaste Disposal Chemical Mix Tank, radwaste coolers and heat exchangers, and associated piping, piping components, and piping elements. Included in this boundary are two (2) Reactor Building isolation valves.

The Solid Radwaste Disposal System includes a radwaste baler, transfer casks, trash compactors, and an interim mobile dewatering and solidification system located outside of the Auxiliary Building. These items are not in scope for License Renewal.

The Processed Water System includes two (2) Processed Water Storage Tanks, two (2) Processed Water Transfer Pumps, and associated piping and instrumentation. These items are not in scope for License Renewal.

The Incore Detector Disposal System includes a jib crane, shielded transfer cask, cutter shield, cutter, vacuum system, and disposal vaults located in the Reactor Building. These items are

not in scope for License Renewal.

Also included in the License Renewal scoping boundary of the Radwaste System are those portions of nonsafety-related piping and equipment that extend beyond the safety-related/nonsafety-related interface up to the location of the first seismic anchor, or to a point no longer in proximity to equipment performing a safety-related function, whichever extends furthest. This includes the nonsafety-related portions of the system located within the Reactor Building, Auxiliary Building, Fuel Handling Building, and Turbine Building. Included in this boundary are pressure retaining components relied upon to preserve the leakage boundary intended function of this portion of the system. For more information, refer to the License Renewal Boundary Drawing for identification of this boundary, shown in red.

Not included in the Radwaste System License Renewal scoping boundary are the following systems, which are separately evaluated as License Renewal systems:

Auxiliary and Fuel Handling Building Ventilation System
Auxiliary Steam System
Closed Cycle Cooling Water System
Condensate System
Core Flooding System
Decay Heat Removal System
Main Steam System
Makeup and Purification System (High Pressure Injection)
Miscellaneous Floor and Equipment Drain System
Reactor Building Sump and Drain System
Reactor Coolant System
Spent Fuel Cooling System
Water Treatment & Distribution System

Reason for Scope Determination

The Radwaste System meets 10 CFR 54.4(a)(1) because it is a safety-related system that is relied upon to remain functional during and following design basis events. It meets 10 CFR 54.4(a)(2) because failure of nonsafety-related portions of the system could prevent satisfactory accomplishment of function(s) identified for 10 CFR 54.4(a)(1). It also meets 10 CFR 54.4(a)(3) because it is relied upon in the safety analyses or plant evaluations to perform a function that demonstrates compliance with the Commission's regulations for Fire Protection (10 CFR 50.48) and Environmental Qualification (10 CFR 50.49). The Radwaste System is not relied upon in safety analyses or plant evaluations to perform a function that demonstrates compliance with the Commission's regulations for Pressurized Thermal Shock (10 CFR 50.61), Anticipated Transient Without Scram (10 CFR 50.62), or Station Blackout (10 CFR 50.63).

System Intended Functions

1. Provide and maintain sufficient reactor coolant inventory for core cooling. The Radwaste System (Liquid Radwaste Disposal System) collects, contains, and suppresses steam relief from the Reactor Coolant System Pressurizer PORV and code safety valves. 10 CFR 54.4(a)(1)
2. Provide primary containment boundary. The Radwaste System (Gaseous Waste Disposal System and Liquid Radwaste Disposal System) includes Reactor Building isolation valves and

piping to assure that radioactive material is not inadvertently transferred out of the Reactor Building. 10 CFR 54.4(a)(1)
3. Resist nonsafety-related SSC failure that could prevent satisfactory accomplishment of a safety-related function. The Radwaste System (Gaseous Waste Disposal System and Liquid Radwaste Disposal System) contains nonsafety-related water filled lines in the Reactor Building, Auxiliary Building, Fuel Handling Building, and Turbine Building which have the potential for spatial interactions (spray or leakage) with safety-related SSCs. 10 CFR 54.4(a)(2)
4. Relied upon in safety analyses or plant evaluations to perform a function that demonstrates compliance with the commission's regulations for Fire Protection (10 CFR 50.48). The Radwaste System (Liquid Radwaste Disposal System) provides a safe shutdown letdown flowpath to the Reactor Coolant Bleed Tanks, with an overflow to the Miscellaneous Radioactive Waste Storage Tank, if Makeup Tank overfilling is imminent. 10 CFR 54.4(a)(3)
5. Relied upon in safety analyses or plant evaluations to perform a function that demonstrates compliance with the commission's regulations for Environmental Qualification (10 CFR 50.49). The Radwaste System (Gaseous Waste Disposal System and Liquid Radwaste Disposal System) includes environmentally qualified Reactor Building isolation valves to assure that radioactive material is not inadvertently transferred out of the Reactor Building. 10 CFR 54.4(a)(3)

UFSAR References

1.2.8
5.3
9.8.10.4
10.3.4
10.4.5.1
11.0
11.A.6
Table 14.0-1
14.2.2.6

License Renewal Boundary Drawings

LR-302-011
LR-302-630
LR-302-640
LR-302-650
LR-302-660
LR-302-669
LR-302-670
LR-302-690
LR-302-691
LR-302-692
LR-302-693
LR-302-694
LR-302-695 sh. 1
LR-302-695 sh. 2
LR-302-696
LR-302-697
LR-302-711
LR-302-719

Table 2.3.3-21 Radwaste System
Components Subject to Aging Management Review

Component Type	Intended Functions
Bolting	Mechanical Closure
Eductor (Waste Concentrators)	Leakage Boundary
Filter Housing (Precoat Filters)	Leakage Boundary
Filter Housing (Resin Traps/Filters)	Leakage Boundary
Flow Device	Leakage Boundary
Flow Element	Leakage Boundary
Flow Element	Pressure Boundary
Flow Venturi	Leakage Boundary
Heat exchanger components (Distillate Cooler shell side components)	Leakage Boundary
Heat exchanger components (Evaporator Seal Water Coolers shell side components)	Leakage Boundary
Heat exchanger components (Reactor Coolant Drain Tank Heat Exchanger tube side components)	Evaluated with the Closed Cycle Cooling Water System
Heat exchanger components (Seal Water Heat Exchanger tube side components)	Leakage Boundary
Piping and fittings	Leakage Boundary
Piping and fittings	Pressure Boundary
Pump Casing (Boric Acid Recycle Pumps)	Leakage Boundary
Pump Casing (Concentrate Radwaste Pumps)	Leakage Boundary
Pump Casing (Decant Pump)	Leakage Boundary
Pump Casing (Evaporator Condensate Pumps)	Leakage Boundary
Pump Casing (Evaporator Distillate Pumps)	Leakage Boundary
Pump Casing (Evaporator Vacuum Pumps)	Leakage Boundary
Pump Casing (Laundry Waste Pump)	Leakage Boundary
Pump Casing (Miscellaneous Waste Transfer Pumps)	Leakage Boundary
Pump Casing (Neutralizer Pumps)	Leakage Boundary
Pump Casing (Reactor Coolant Drain Tank Pump)	Pressure Boundary
Pump Casing (Reactor Drain Pump)	Leakage Boundary
Pump Casing (Slurry Pump)	Leakage Boundary
Pump Casing (Waste Feed Pumps)	Leakage Boundary
Pump Casing (Waste Gas Compressors)	Leakage Boundary
Pump Casing (Waste Oil Transfer Pump)	Leakage Boundary
Pump Casing (Waste Transfer Pumps)	Leakage Boundary
Rupture Disks	Leakage Boundary
Sight Glasses	Leakage Boundary

Sight Glasses	Pressure Boundary
Sparger	Spray
Strainer Body	Leakage Boundary
Tanks (Cation Demineralizers)	Leakage Boundary
Tanks (Chemical Mix Tank)	Leakage Boundary
Tanks (Concentrate Waste Storage Tanks)	Leakage Boundary
Tanks (Deborating Demineralizers)	Leakage Boundary
Tanks (Distillate Reservoirs)	Leakage Boundary
Tanks (Evaporator Air/Water Separators)	Leakage Boundary
Tanks (Evaporator Condensate Demineralizers)	Leakage Boundary
Tanks (Gas Sample Air/Water Separators)	Leakage Boundary
Tanks (Laundry Waste Storage Tank)	Leakage Boundary
Tanks (Miscellaneous Radioactive Waste Storage Tank)	Pressure Boundary
Tanks (Neutralized Waste Storage Tank)	Leakage Boundary
Tanks (Neutralizer Feed Tank)	Leakage Boundary
Tanks (Neutralizer Mixing Tank)	Leakage Boundary
Tanks (Reactor Coolant Bleed Tanks)	Pressure Boundary
Tanks (Reactor Coolant Drain Tank)	Pressure Boundary
Tanks (Reclaimed Boric Acid Tanks)	Leakage Boundary
Tanks (Spent Resin Storage Tank)	Leakage Boundary
Tanks (Used Precoat Tank)	Leakage Boundary
Tanks (Waste Concentrators)	Leakage Boundary
Tanks (Waste Evaporator Condensate Storage Tanks)	Leakage Boundary
Tanks (Waste Feed Tanks)	Leakage Boundary
Tanks (Waste Gas Separator Tank)	Leakage Boundary
Tanks (Waste Oil Storage Tanks)	Leakage Boundary
Thermowell	Leakage Boundary
Thermowell	Pressure Boundary
Valve Body	Leakage Boundary
Valve Body	Pressure Boundary

The aging management review results for these components are provided in:

Table 3.3.2-21 Radwaste System
Summary of Aging Management Evaluation

2.3.3.22 Service Building Chilled Water System

System Purpose

The intended function of the Service Building Chilled Water (SBCW) System for License Renewal is to maintain leakage boundary integrity to preclude system interactions. For this reason, this system's pressure retaining components located in proximity to other components performing safety-related functions have been included in the scope of License Renewal. This system is not required to operate to support License Renewal intended functions and is in scope for potential spatial interaction.

The purpose of the Service Building Chilled Water System is to provide heat removal for the Service Building ventilation, which is not in scope for License Renewal. The Service Building Chilled Water System accomplishes this purpose by supplying cooling water for the Service Building air handling units. The system is normally in operation.

System Operation

The SBCW System is comprised of a chiller, heat exchanger, air handling unit cooling coils, a pump, valves, tanks, piping, and instrumentation and control. The system is normally in operation. The system removes heat from the Service Building ventilation via the cooling coils in the air handling units. Chilled water from the Service Building Chiller is recirculated through the cooling coils in the air handling units. The Closed Cycle Cooling Water System provides a heat sink for the chiller. The chilled water is then returned to the air handling units. The SBCW System is a closed-loop chilled water system.

System Boundary

The License Renewal scoping boundary for the Service Building Chilled Water System encompasses the liquid filled portion of the system that is located in proximity to equipment performing a safety-related function. This includes the liquid filled portions of the system located within the Turbine Building. Included in this boundary are pressure retaining components relied upon to preserve the leakage boundary intended function of this system. For more information, refer to the License Renewal Boundary Drawing for identification of the boundary, shown in red.

Not included in the Service Building Chilled Water System scoping boundary are the following interfacing systems, which are separately evaluated as License Renewal systems:

Closed Cycled Cooling Water System

Reason for Scope Determination

The Service Building Chilled Water System is not in scope under 10 CFR 54.4(a)(1) because no portions of the system are safety-related or relied upon to remain functional during and following design basis events. The Service Building Chilled Water System meets 10 CFR 54.4(a)(2) because failure of nonsafety-related portions of the system could prevent satisfactory accomplishment of function(s) identified for 10 CFR 54.4(a)(1). The system is not in scope under 10 CFR 54.4(a)(3) because it is not relied upon in safety analyses or plant evaluations to perform a function that demonstrates compliance with the Commission's

regulations for Fire Protection (10 CFR 50.48), Environmental Qualification (10 CFR 50.49), Pressurized Thermal Shock (10 CFR 50.61), Anticipated Transient Without Scram (10 CFR 50.62), or Station Blackout (10 CFR 50.63).

System Intended Functions

1. Resist nonsafety-related SSC failure that could prevent satisfactory accomplishment of a safety-related function. The portion of the Service Building Chilled Water that is located in the Turbine Building is in scope for License Renewal for leakage. 10 CFR 54.4(a)(2)

UFSAR References

None

License Renewal Boundary Drawings

LR-302-846

Table 2.3.3-22 Service Building Chilled Water System
Components Subject to Aging Management Review

Component Type	Intended Functions
Bolting	Mechanical Closure
Expansion Joints	Leakage Boundary
Heat exchanger components (SB Chiller - shell)	Leakage Boundary
Piping and fittings	Leakage Boundary
Pump Casing (SB Chilled Water Pump)	Leakage Boundary
Restricting Orifices	Leakage Boundary
Strainer Body	Leakage Boundary
Tanks (Chilled Water Chemical Mix Tank)	Leakage Boundary
Tanks (Chilled Water Expansion Tank)	Leakage Boundary
Valve Body	Leakage Boundary

The aging management review results for these components are provided in:

Table 3.3.2-22 Service Building Chilled Water System
Summary of Aging Management Evaluation

2.3.3.23 Spent Fuel Cooling System

System Purpose

The Spent Fuel Cooling (SFC) System is a mechanical, safety-related, normally operating system designed to remove decay heat from the spent fuel stored in the spent fuel pools. The SFC System is capable of maintaining spent fuel pool temperatures within design limits.

The purpose of the SFC System is to remove decay heat from the spent fuel stored in the pools. The SFC System accomplishes this purpose by forced circulation of spent fuel pool water through coolers.

The SFC System operation is initiated by manual control for spent fuel cooling functions. Secondary functions are controlled via local manipulation of valves and control equipment.

System Operation

The Spent Fuel Cooling (SFC) System is comprised of three (3) pumps, two (2) coolers, piping, valves and piping components, and instrumentation and control. There are two (2) spent fuel coolant pumps and one (1) boron recirculation pump.

Spent fuel is cooled by pumping spent fuel pool water through coolers and back to the spent fuel storage pools. Either of the two Spent Fuel Cooling Pump-Spent Fuel Cooler combinations may be used to perform the following actions: cool spent fuel pool A, cool spent fuel pool B, cool both spent fuel pools, or transfer refueling water either to or from the fuel transfer canal and the Borated Water Storage Tank (BWST).

Either of the spent fuel coolant pumps and Spent Fuel Coolers may cool either spent fuel pool A or spent fuel pool B. The Nuclear Services Closed Cooling Water function of the Closed Cycle Cooling Water System provides cooling water for the Spent Fuel Coolers.

The borated water recirculation pump is used to accomplish water circulation from either spent fuel pool, the fuel transfer canal, or the borated water storage tank for cleanup or "skimming" functions to the Radwaste System. It is also used to empty spent fuel pool A, if required, and to lower and raise the water level in the spent fuel cask pit as required for the placement, loading, and removal of the spent fuel shipping cask. The borated water recirculation pump has a minimum flow line. The spent fuel pool water can be directed through a precoat filter and a demineralizer for cleanup, and then is returned to the SFC System. Borated water is normally added to the system from the Makeup and Purification System.

A small quantity of flow from the spent fuel cooling pumps is diverted to a radiation monitor, which provides monitoring of radiation levels in the spent fuel pool water. The flush water for the system radiation monitor is supplied from the Water Treatment and Distribution System.

The Decay Heat Removal System is able to cool the spent fuel pools if the spent fuel coolant pumps or coolers fail during periods where the Reactor Coolant System is shutdown and depressurized.

The SFC System interfaces with the Radwaste System to support the water cleanup function. The SFC System interfaces with the Makeup and Purification System to ensure chemical

concentrations are maintained. The SFC System interfaces with the Decay Heat Removal System, which provides a connection to the borated water storage tank and acts as a backup system for cooling the spent fuel pools. The SFC System interfaces with the Water Treatment and Distribution System to provide water to the radiation monitor. The cooling water for the Spent Fuel Coolers is provided by the Closed Cycle Cooling Water System.

For more detailed information, see UFSAR Section 9.4.

System Boundary

The Spent Fuel Cooling (SFC) System boundary begins at the suction piping at the spent fuel pools and includes both sets of outlets. It continues through the spent fuel coolant pumps, up to the Spent Fuel Cooler inlet connections, and continues from the Spent Fuel Cooler outlet connections to the spent fuel pools through the inlets. The boundary includes cross-tie lines at the spent fuel coolant pump suction.

The system boundary includes piping and components from the spent fuel pool outlets to the borated water recirculation pump, up to the boric acid pump isolation valve, and to the spent fuel pool outlet. The boundary includes the piping running from the borated water recirculation pump suction to the spent fuel cask loading pit.

The boundary includes piping and components up to the Radwaste System isolation valves, the BWST cleanup return valve from Spent Fuel Cooling, and Decay Heat Removal System check valve going to the Reactor Building sump line. The boundary includes the BWST return valve from the cleanup line drain.

Also included in the system boundary are the fuel transfer canal sump drain line and reactor cavity flooding line, and the fuel transfer canal fill and drain line through the reactor building penetration, two isolations valves, test connections, tie-in to the borated water recirculation pump suction line, to the BWST isolation valve. The boundary also includes piping up to the BWST suction isolation valve.

The boundary also includes the radiation monitoring piping up to the Water Treatment and Distribution System isolation valve.

All associated piping, components and instrumentation contained within the flow path described above are included in the system evaluation boundary.

Not included in the scoping boundary are the fuel transfer tubes and fuel transfer canal, which are evaluated with the Reactor Building Structure. Not included in the scoping boundary are the spent fuel pools and spent fuel cask loading pit, which are evaluated with the Fuel Handling Building Structure. Not included are fuel transfer tubes flange "O" ring test connections and header piping, drain piping, fuel pool penetration test valves, and the fuel pool isolation gate valves at spent fuel pool “A”, which are evaluated with the Fuel Handling and Fuel Storage System. Not included in the system boundary are the Spent Fuel Coolers, which are evaluated with the Closed Cycle Cooling Water System.

Also included in the License Renewal scoping boundary of the Spent Fuel Cooling System are those portions of nonsafety-related piping and equipment that extend beyond the safety-related/nonsafety-related interface up to the location of the first seismic anchor, or to a point no longer in proximity to equipment performing a safety-related function, whichever extends

furthest. Included in this boundary are pressure retaining components relied upon to preserve the leakage boundary intended function of this portion of the system. For more information, refer to the License Renewal Boundary Drawing for identification of this boundary, shown in red.

Not included in the SFC License Renewal Scoping Boundary are the following interface systems, which are separately evaluated as license renewal systems:

Closed Cycle Cooling Water System
Decay Heat Removal System
Fuel Handling Building
Fuel Handling and Fuel Storage System
Make-up and Purification System
Radwaste System
Reactor Building
Water Treatment and Distribution System

Reason for Scope Determination

The Spent Fuel Cooling System meets 10 CFR 54.4(a)(1) because it is a safety-related system that is relied upon to remain functional during and following design basis events. It meets 10 CFR 54.4(a)(2) because failure of nonsafety-related portions of the system could prevent satisfactory accomplishment of function(s) identified for 10 CFR 54.4(a)(1). It does not meet 10 CFR 54.4(a)(3) because the Spent Fuel Cooling System is not relied upon in any safety analyses or plant evaluations to perform a function that demonstrates compliance with the Commission's regulation for Fire Protection (10 CFR 50.48), Environmental Qualification (10 CFR 50.49), Pressurized Thermal Shock (10 CFR 50.61), Anticipated Transient Without Scram (10 CFR 50.62), or Station Blackout (10 CFR 50.63).

System Intended Functions

1. Provide primary containment boundary. The fuel transfer canal drain line penetrates containment and proper isolation is required for containment isolation. 10 CFR 54.4(a)(1)
2. Ensure adequate cooling in the spent fuel pool to maintain stored fuel within acceptable temperature limits. The system provides cooling to the spent fuel pool and the spent fuel contained within it. 10 CFR 54.4(a)(1)
3. Resist nonsafety-related SSC failure that could prevent satisfactory accomplishment of a safety-related function. The system contains nonsafety-related piping that has the potential to spatially and structurally interact with safety-related portions of this system. 10 CFR 54.4(a)(2)

UFSAR References

5.1
Table 5.7-3
9.4

License Renewal Boundary Drawings

LR-302-630
LR-302-640

Table 2.3.3-23 Spent Fuel Cooling System
Components Subject to Aging Management Review

Component Type	Intended Functions
Bolting	Mechanical Closure
Piping and fittings	Leakage Boundary
Piping and fittings	Pressure Boundary
Pump Casing (Borated Water Recirculation)	Pressure Boundary
Pump Casing (Spent Fuel Coolant)	Pressure Boundary
Restricting Orifices	Pressure Boundary
Thermowell	Pressure Boundary
Valve Body	Leakage Boundary
Valve Body	Pressure Boundary

The aging management review results for these components are provided in:

Table 3.3.2-23 Spent Fuel Cooling System
Summary of Aging Management Evaluation

2.3.3.24 Station Blackout and UPS Diesel Generator Systems

System Purpose

The Station Blackout and UPS Diesel Generator (SBO) Systems consist of the following plant systems: Station Blackout Diesel and Support Systems (Mechanical) and Uninterrupted Power Supply (UPS) Diesel (Mechanical). The SBO System is an auxiliary system designed to supply electrical power to key plant components during a Station Blackout event. The SBO System is in scope for License Renewal. However, portions of the SBO System are not required to perform intended functions and are not in scope. These include the mechanical portions of the UPS Diesel System. The UPS Diesel (Mechanical) and support components are not in scope for License Renewal because they do not perform an intended function. Only electrical components of the UPS are required to perform an intended function, which is to provide power to trip signals during an Anticipated Transient Without Scram event. Those electrical components are evaluated with the 120 V Vital Power Systems. Also, the SBO sump pumps are not in scope for License Renewal, since they do not perform an intended function.

The SBO System is a mechanical system designed to provide the motive force for generating electrical power for key plant components during a Station Blackout event.

The SBO System accomplishes this purpose by utilizing diesel engines to rotate electric generators attached to the diesel engines. Fuel supply, air supply, and cooling water support Station Blackout Diesel engine operation.

System Operation

The Station Blackout Diesels consist of one (1) emergency diesel generator, fuel tanks and pumps, piping and components, heat exchangers, and instrumentation and control. The UPS Diesel consists of one (1) diesel generator, fuel tanks and pumps, piping and components, and instrumentation and control.

The Station Blackout Diesel is cooled by three heat exchangers which are cooled by water from the Fire Protection System. The heat exchangers are the Jacket Water Cooler, Lube Oil Cooler, and Air Coolant Water Cooler. Once the cooling water passes through the Station Blackout Diesel generator heat exchangers, the piping connects to the Open Cycle Cooling Water System common discharge line, which discharges to the Mechanical Draft Cooling Tower basin and ultimately back to the river.

The Station Blackout Diesel has its own independent fuel supply system, consisting of a diesel fuel storage tank, diesel fuel day tank, engine-driven fuel pump, day tank supply pumps, and piping. The two diesel fuel transfer pumps are supplied by the diesel fuel storage tank, and maintain the diesel fuel day tank full.

The Station Blackout Diesel has its own independent air supply system, consisting of a compressor, receivers, and piping. This air supply system supplies diesel starting air and instrument air for Station Blackout-related instrumentation. The air supply includes dryers and filters. Combustion exhaust is expelled from the engines through piping, expansion joints, exhaust mufflers, and vents to the atmosphere.

The Station Blackout Diesel also has a lube oil system and dedicated batteries to support

engine start. The lube oil system provides engine lubrication, and is cooled by a closed cooling loop. The batteries provide starting power for the engines.

The UPS Diesel has its own independent fuel supply system, consisting of an underground UPS Diesel fuel oil storage tank, UPS Diesel fuel oil day tank, UPS Diesel fuel oil transfer pump, and piping. The UPS Diesel fuel oil transfer pump is supplied by the UPS Diesel fuel oil storage tank, and maintain the UPS Diesel fuel oil day tank full.

For more detailed information, see UFSAR Sections 7.1.5.1.6, 8.5.1, 8.5.2, and 14.1.2.8.4.

System Boundary

The Station Blackout Diesel fuel boundary begins at the piping fill connection outside the Station Blackout Diesel Building wall, the system continues through the diesel fuel storage tank, supply pumps, filters, diesel fuel day tank, engine-driven fuel pump, to the Station Blackout Diesel engine. The boundary also includes the clean fuel return line, tank, and pump, as well as the tank overflow and return lines.

The Station Blackout Diesel cooling water boundary begins at the Station Blackout Diesel cooling water supply isolation valve. The system continues up to the valve manifold, through the tube side of the air cooler, lube oil cooler, and jacket coolant cooler, and continues up to the river water discharge pipe.

The Station Blackout Diesel instrument and starting air boundary begins at the outlet of the Station Blackout air compressors. The system continues through the air receivers, prefilter, dryer, and filter, through the Station Blackout Diesel engine starting air piping network and through the Station Blackout damper thermostat. The boundary also includes the air receiver drain piping and drain tanks, and the exhaust pathway from the engine through piping, expansion joint, exhaust muffler, and a vent to the atmosphere.

The Station Blackout Diesel jacket cooling boundary begins at the engine jacket outlet header. The system continues through the jacket coolant cooler and air cooler, through the engine-driven pumps, and ends at the engine jacket inlet header. The boundary also includes the branch piping to the expansion tank, and the stand-by heater and stand-by pump.

The mechanical portion of the UPS Diesel System does not perform an intended function and is not in the scope of License Renewal. The 120 VAC inverter that is part of the electrical portion of the UPS Diesel System supports the Commission's regulations for ATWS and is in the scope of License Renewal. The inverter is evaluated as part of the 250/125 VDC System.

All associated piping, components and instrumentation contained within the flow path described above are included in the system evaluation boundary.

Not included in the scoping boundary is the river water common discharge line, which is evaluated with the Open Cycle Cooling Water System. Not evaluated in the scoping boundary is the cooling water for the Station Blackout Diesel heat exchangers which is supplied by the Fire Protection System. Also not evaluated in the scoping boundary is the combustion air for the diesel engines, which evaluated with the Diesel Generator Building Ventilation System.

Not included in the SBO System License Renewal scoping boundary are the following interfacing systems, which are separately evaluated as License Renewal systems:

120 V Vital Power System
4160 V Auxiliary System
Diesel Generator Building Ventilation System
Fire Protection System
Open Cycle Cooling Water System

Reason for Scope Determination

The Station Blackout and UPS Diesel Generator Systems are not in scope under 10 CFR 54.4(a)(1) because no portions of the systems are safety-related or relied upon to remain functional during and following design basis events. The Station Blackout and UPS Diesel Generator Systems are not in scope under 10 CFR 54.4(a)(2) because failure of nonsafety-related portions of the systems would not prevent satisfactory accomplishment of function(s) identified for 10 CFR 54.4(a)(1). The Station Blackout and UPS Diesel Generator Systems are relied upon to perform a function that demonstrates compliance with the Commission's regulation for Station Blackout (10 CFR 50.63). The Station Blackout and UPS Diesel Generator Systems are not relied upon in any safety analyses or plant evaluations to perform a function that demonstrates compliance with the Commission's regulation for Anticipated Transient Without Scram (10 CFR 50.62), Environmental Qualification (10 CFR 50.49), Fire Protection (10 CFR 50.48), or Pressurized Thermal Shock (10 CFR 50.61).

System Intended Functions

1. Relied upon in safety analyses or plant evaluations to perform a function that demonstrates compliance with the Commission's regulations for Station Blackout (10 CFR 50.63). 10 CFR 54.4(a)(3)

UFSAR References

7.1.5.1.6
8.5.1
8.5.2
14.1.2.8.4

License Renewal Boundary Drawings

LR-302-202
LR-302-355
LR-302-356
LR-302-357
LR-302-358
LR-302-359
LR-302-881

Table 2.3.3-24 Station Blackout and UPS Diesel Generator Systems Components Subject to Aging Management Review

Component Type	Intended Functions
Bolting	Mechanical Closure
Electric Heaters (housing)	Pressure Boundary
Expansion Joints	Pressure Boundary
Filter Housing	Pressure Boundary
Flow Element	Pressure Boundary
Heat exchanger components (SBO Air Cooler)	Heat Transfer
Heat exchanger components (SBO Air Cooler)	Pressure Boundary
Heat exchanger components (SBO Jacket Coolant Cooler)	Heat Transfer
Heat exchanger components (SBO Jacket Coolant Cooler)	Pressure Boundary
Heat exchanger components (SBO Lube Oil Cooler)	Heat Transfer
Heat exchanger components (SBO Lube Oil Cooler)	Pressure Boundary
Hoses	Pressure Boundary
Piping and fittings	Pressure Boundary
Pump Casing (SBO Diesel Air Coolant Pump)	Pressure Boundary
Pump Casing (SBO Diesel Clean Fuel Oil Pump)	Pressure Boundary
Pump Casing (SBO Diesel DC Aux Fuel Oil Pump)	Pressure Boundary
Pump Casing (SBO Diesel Fuel Oil Fill Pump)	Pressure Boundary
Pump Casing (SBO Diesel Fuel Transfer Pumps)	Pressure Boundary
Pump Casing (SBO Diesel Injection Pump)	Pressure Boundary
Pump Casing (SBO Diesel Jacket Coolant Pump)	Pressure Boundary
Pump Casing (SBO Engine Driven Fuel Oil Pump)	Pressure Boundary
Pump Casing (SBO Main Lube Oil Pump)	Pressure Boundary
Pump Casing (SBO Prelube Pump)	Pressure Boundary
Pump Casing (SBO Standby Coolant Pump)	Pressure Boundary
Pump Casing (SBO Standby Lube Oil Recirc Pump)	Pressure Boundary
Strainer Body	Pressure Boundary
Tanks (All Fuel Oil)	Pressure Boundary
Tanks (SBO Air Dryer)	Pressure Boundary

Tanks (SBO Air Receiver)	Pressure Boundary
Tanks (SBO Jacket Cooling Expansion Tank)	Pressure Boundary
Thermowell	Pressure Boundary
Valve Body	Pressure Boundary

The aging management review results for these components are provided in:

Table 3.3.2-24 Station Blackout and UPS Diesel Generator Systems Summary of Aging Management Evaluation

2.3.3.25 Water Treatment & Distribution System

System Purpose

The Water Treatment and Distribution (WTD) System consists of the following plant systems: Water Pretreatment System, Cycle Makeup Demineralizer System, Demineralized Water System, Domestic Water System, Reclaimed Water System, Filtered Water System, River Water Biocide System, and Domestic Plumbing and Drainage Systems.

The purpose of the WTD System is to provide storage and supply of domestic, demineralized, filtered, and well water for various uses throughout the site. The WTD System accomplishes this by utilizing filters, demineralizers, tanks, piping, and pumps to store, process, and transfer the water to the end-use systems.

The WTD System is in scope for License Renewal. However, portions of the system not located within safety-related structures are not in scope because they do not have the potential to spatially interact with safety-related equipment and are not relied upon for structural support.

System Operation

The Water Treatment and Distribution (WTD) System consists of piping and piping components, valves, tanks, pumps, and instrumentation and control. Under normal conditions, the system is almost entirely in automatic.

The water pretreatment portion of the system pumps water from on-site wells to fire service, demineralized water systems, and domestic water users.

The cycle makeup demineralizer portion of the system is designed to produce high purity water from filtered river water to be used for primary and secondary makeup, closed cycle cooling makeup, and the chemical laboratories. Acid, caustic, and neutralizing tanks are provided for demineralizer regeneration. The filtered water enters the carbon filters, then passes through cation units, vacuum degasifiers, anion units, mixed bed units, and then flows to the desired end-user system. Although operational, this portion of the system is bypassed and demineralized water is provided by a contract water treatment system, using well water as a source. Demineralized water is provided from either process to the Demineralized Water Storage Tank, Main Condenser, Condensate Storage Tanks, and Reclaimed Water Storage Tank.

The domestic water portion of the system supplies hot and cold water for use in showers, dispensary, janitor floor sinks, lavatories, and the Industrial Cooler Chemical Addition area. Well water is pumped through heaters, water softeners, and purifiers and then goes to the end-user point.

The domestic plumbing and drains portion of the system supplies a return path for domestic waste, such as sink drains and toilet waste lines.

The reclaimed water portion of the system stores and supplies demineralized water to nuclear auxiliary systems. Demineralized water is stored in the Reclaimed Water Storage Tank, and pumped to the required system.

The river water chemical treatment portion of the system prevents biological growth in the river water heat exchangers and associated piping, which are evaluated with the Open Cycle Cooling Water System. The process consists of a biocide feed tank, pump, mixing ejector, and associated piping.

System Boundary

The Water Treatment and Distribution (WTD) System boundary begins at the Reclaimed Water Storage Tank, and continues through the Reclaimed Water Pump, Reclaimed Water Pressure Tank, through the containment isolation valves, to the supplied system interfaces in the Auxiliary, Fuel Handling, and Reactor Buildings.

The License Renewal scoping boundary of the WTD System encompasses the liquid-filled portion of the system that is located in proximity to equipment performing a safety-related function. This includes the liquid-filled portions of the system located within the Reactor Building, Turbine Building, Control Building, Intermediate Building, Auxiliary Building, and Intake Screen and Pump House. Included in this boundary are pressure retaining components relied upon to preserve the leakage boundary intended function of this system. For more information, refer to the License Renewal Boundary Drawing for identification of this boundary, shown in red.

All associated piping, components, and instrumentation contained within the flow path described above is included in the system evaluation boundary.

Components not included in scope are the degasifier vacuum pumps, neutralizing caustic pump, regen acid pumps, regen caustic pumps, and the caustic and acid storage tanks. These components are abandoned in place and have been flushed and drained. Piping and piping components directly related to these abandoned components are also abandoned and are not in scope.

Not evaluated in the scoping boundary is the lubricating water connection piping downstream of the isolation valves to the river water pumps, which is evaluated with the Open Cycle Cooling Water System. Also not evaluated in the scoping boundary is the nitrogen supply to the storage tanks, which is evaluated with the Compressed Gas System.

Not included in the WTD System License Renewal scoping boundary are the following interfacing systems, which are separately evaluated as License Renewal systems:

Compressed Gas System
Open Cycle Cooling Water System

Reason for Scope Determination

The Water Treatment and Distribution System meets 10 CFR 54.4(a)(1) because it is a safety-related system that is relied upon to remain functional during and following design basis events. The Water Treatment and Distribution System meets 10 CFR 54.4(a)(2) because failure of nonsafety-related portions of the system could prevent satisfactory accomplishment of function(s) identified for 10 CFR 54.4(a)(1). The Water Treatment and Distribution System also meets 10 CFR 54.4(a)(3) because it is relied upon in the safety analyses and plant evaluations to perform a function that demonstrates compliance with the Commission's regulations for Environmental Qualification (10 CFR 50.49). The Water Treatment and Distribution System is

not in scope under 10 CFR 54.4(a)(3) because it is not relied upon in safety analyses or plant evaluations to perform a function that demonstrates compliance with the Commission's regulations for Fire Protection (10 CFR 50.48), Pressurized Thermal Shock (PTS) (10 CFR 50.61), Anticipated Transient Without Scram (ATWS) (10 CFR 50.62), or Station Blackout (10 CFR 50.63).

System Intended Functions

1. Provide primary containment boundary. The reclaimed water piping penetrates containment and the isolation valves serve as the containment boundary. (UFSAR Table 5.3-2) 10 CFR 54.4(a)(1)
2. Resist nonsafety-related SSC failure that could prevent satisfactory accomplishment of a safety-related function. Portions of the system have the potential for spatial interaction or structural support. 10 CFR 54.4(a)(2)
3. Relied upon in safety analyses or plant evaluations to perform a function that demonstrates compliance with the Commission's regulations for Environmental Qualification (10 CFR 50.49). Containment isolation valves are part of the EQ program. 10 CFR 54.4(a)(3)

UFSAR References

Table 5.3-2
9.2.1
9.6.1
10.4.1
10.4.2
11.2

License Renewal Boundary Drawings

LR-302-051
LR-302-101
LR-302-106
LR-302-151
LR-302-158 Sht. 1
LR-302-158 Sht. 2
LR-302-158 Sht. 3
LR-302-158 Sht. 4
LR-302-162
LR-302-163
LR-302-169
LR-302-171
LR-302-172
LR-302-174
LR-302-181
LR-302-182
LR-302-196
LR-302-201
LR-302-203
LR-302-221
LR-302-304
LR-302-359
LR-302-610

LR-302-620
LR-302-630
LR-302-645
LR-302-650
LR-302-669
LR-302-670
LR-302-671
LR-302-690
LR-302-691
LR-302-692
LR-302-693
LR-302-696
LR-302-697
LR-302-712
LR-302-719
LR-302-845

Table 2.3.3-25 Water Treatment & Distribution System
Components Subject to Aging Management Review

Component Type	Intended Functions
Bolting	Mechanical Closure
Electric Heaters (Backup Electric Heaters for RBATs and CWSTs)	Leakage Boundary
Flow Element	Leakage Boundary
Heat exchanger components (Secondary Cooling Coils - Shell)	Leakage Boundary
Piping and fittings	Leakage Boundary
Piping and fittings	Pressure Boundary
Piping and fittings	Structural Support
Pump Casing (Corrosive Waste Sump Pumps)	Leakage Boundary
Pump Casing (Demineralized Water Booster Pump)	Leakage Boundary
Pump Casing (Demineralized Water Transfer Pump)	Leakage Boundary
Pump Casing (Domestic Hot Water Recirculation Pump)	Leakage Boundary
Pump Casing (Domestic Water Booster Pumps)	Leakage Boundary
Pump Casing (Filtered Water Booster Pump)	Leakage Boundary
Pump Casing (Makeup Neutralizing Tank Recirculation Pump)	Leakage Boundary
Pump Casing (PWP Demineralized Water Pump)	Leakage Boundary
Pump Casing (Reclaimed Water Pump)	Leakage Boundary
Pump Casing (River Water Pump Lubrication Pumps)	Leakage Boundary
Tanks (Carbon Filters)	Leakage Boundary
Tanks (Cation/Anion/Mixed Bed Demineralizer Tanks)	Leakage Boundary
Tanks (Demineralized Water Storage Tank)	Leakage Boundary
Tanks (Domestic Water Heater)	Leakage Boundary
Tanks (Domestic Water Tank)	Leakage Boundary
Tanks (Makeup Demineralizer Neutralizing Tank)	Leakage Boundary
Tanks (Reclaimed Water Pressure Tank)	Leakage Boundary
Tanks (Reclaimed Water Storage Tank)	Leakage Boundary
Valve Body	Leakage Boundary
Valve Body	Pressure Boundary

The aging management review results for these components are provided in:

Table 3.3.2-25 Water Treatment & Distribution System Summary of Aging Management Evaluation

2.3.4 STEAM AND POWER CONVERSION SYSTEMS

The following systems are addressed in this section:

- Condensate System (Section 2.3.4.1)
- Condensers & Air Removal System (Section 2.3.4.2)
- Emergency Feedwater System (Section 2.3.4.3)
- Extraction Steam System (Section 2.3.4.4)
- Feedwater System (Section 2.3.4.5)
- Main Generator and Auxiliary Systems (Section 2.3.4.6)
- Main Steam System (Section 2.3.4.7)
- Steam Turbine and Auxiliary Systems (Section 2.3.4.8)

2.3.4.1 Condensate System

System Purpose

The Condensate System is a normally operating secondary side water system that consists of the following plant systems: Main Condensate System, Powdex Condensate Polishing System, Condensate Seal Water System, and Condensate Chemical Feed System. The Condensate System is in scope for License Renewal. The Condensate System has several interfaces with other systems that are not within the License Renewal boundary of the Condensate System.

The purpose of the Condensate System is to deliver water to the main and emergency feedwater pumps. During normal plant conditions the Condensate System delivers deaerated water from the main condenser hotwell to the suction header of the Feedwater System, such that the net positive suction head requirements of the main feedwater pumps and the water purity requirements of the Once Through Steam Generators (OTSG) are met. During abnormal conditions the Condensate System provides water to the emergency feedwater pumps from condensate storage tanks, the primary water supply for these pumps. The main condenser hotwell can also be aligned to the suction of the emergency feedwater pumps as an alternate water supply. The Condensate System design provides alternate flow paths from each of these water sources to the emergency feedwater pumps, satisfying requirements for plant safe shutdown during a fire. During a station blackout event, the inventory of the condensate storage tanks is used for decay heat removal. The Condensate System includes the Powdex condensate polishers that function to establish and maintain the required quality of the feedwater delivered to the OTSG's. The seal water function of the Condensate System prevents air from entering the main condenser by placing a water seal on valves and pumps subject to condenser vacuum. Due to its interfaces with the main condenser, the Condensate System itself functions as part of the pressure boundary for main condenser vacuum. The Condensate System also performs chemical treatment of secondary side water to maintain feedwater pH, feedwater oxygen, and second stage high pressure heater pH within design limits. Additionally, the Condensate System serves as a water supply to condenser expansion joints, turbine exhaust hood spray, reactor coolant bleed tanks, and the Closed Cycle Cooling Water System.

System Operation

The Condensate System is comprised of three condensate pumps, three condensate booster pumps, six Powdex condensate polishing units, hereafter referred to as Powdex units, two parallel trains of low pressure feedwater heaters, two condensate storage tanks and the required piping, valves, instrumentation and controls.

For normal operation at full load conditions, the Condensate System uses two condensate pumps, two condensate booster pumps, and both low pressure heater strings. The third condensate and condensate booster pumps are in a standby condition. The condensate pumps take suction from the main condenser hotwell and pump water through the Powdex units and the gland steam condenser to the condensate booster pump suction header. Five out of six Powdex units are utilized for full load flow.

The condensate booster pumps move water through the low pressure heaters to the feedwater pump suction header. Either low pressure heater string may be bypassed for maintenance

without shutting down the plant.

During low load operation, the condensate and condensate booster pumps are protected from low flow conditions by a recirculation line back to the condenser hotwell. A bypass valve will open automatically to maintain adequate flow in the Condensate System.

In the event that the condensate storage tank low-level alarms occur while the condensate storage tank supplies emergency feedwater pumps, the operators may align the condenser hotwell directly to the emergency feedwater pump suction.

System Boundary

The Condensate System boundary begins in the Turbine Building where the condensate pumps take suction from the main condenser hotwell via a common suction header. The hotwell is part of the Condensers & Air Removal System. The condensate pumps discharge to a common header, which branches into two parallel flow paths leading to the Powdex condensate polishing units. A common return line from the Powdex units discharges to the gland steam condenser, which feeds the suction header of the condensate booster pumps. The gland steam condenser is part of the Steam Turbine and Auxiliaries System. The condensate booster pumps provide water to the low pressure heaters tubes, which interface with the Extraction Steam System on the shell side the heaters. From these heaters, condensate flows to the Feedwater System at the main feedwater pumps, where the main flow path of the Condensate System ends. The condensate pumps also provide water to the turbine exhaust hood spray, which is part of the Steam Turbine and Auxiliaries System. Additional Feedwater System interfaces include the main feedwater pump seal supply and return and the main feedwater pump gland leak off to the miscellaneous drain collection tank.

The condensate storage tanks discharge directly to the emergency feedwater pumps, which are part of the Emergency Feedwater System. Additional Emergency Feedwater System interfaces with the Condensate System include the emergency feedwater pump recirculation line back to the Condensate System and emergency feedwater pump bearing cooling return. The Water Treatment and Distribution System provides make-up water to the condensate storage tanks. The Containment Isolation System supplies nitrogen to the spargers internal to the condensate storage tank.

Branch lines off the condensate storage tank discharge piping provide water to the auxiliary boiler feed pumps, the Powdex backwash pumps, and the main condenser hotwell. The auxiliary boiler feed pumps are part of the Auxiliary Steam System. Other Condensate System interfaces with the Auxiliary Steam System include the water supply to the secondary chemical mix and hydrazine injection tanks and the Auxiliary Steam condensate return to the miscellaneous drain collection tank. Additional Condensers & Air Removal System interfaces include seal water to main and auxiliary vacuum pumps, vacuum breakers, main condenser expansion joints and miscellaneous drain collection tank discharge to the main condenser hotwell.

The Water Treatment and Distribution System supports the Powdex and the chemical treatment functions of the Condensate System. It provides seal water to the Powdex spent resin pumps and demineralized water to the secondary chemical mixing tank and hydrazine injection tank. The Instrument and Control Air System, the Miscellaneous Floor and Equipment Drain System, the Radwaste System, and the Steam Turbine and Auxiliaries System also support the Powdex functions.

The Condensate System interfaces with the Liquid and Gas Sampling System in several places. Condensate sampling occurs at the discharge of the condensate booster pumps prior to low presssure heaters. Chilled water from the sampling rack chillers cools the sample coolers at the discharge of the Powdex units. Also, the Condensate System receives flow from the turbine plant sample recovery tank, part of the Liquid and Gas Sampling System, at the miscellaneous drain collection tank.

Also included in the License Renewal scoping boundary of the Condensate System are those portions of nonsafety-related piping and equipment that extend beyond the safety-related/nonsafety-related interface up to the location of the first seismic anchor, or to a point no longer in proximity to equipment performing a safety-related function, whichever extends furthest. This includes the nonsafety-related portions of the system located within the Intermediate Building and the Turbine Building. Included in this boundary are pressure-retaining components relied upon to preserve the leakage boundary intended function of this portion of the system. For more information, refer to the License Renewal Boundary Drawing for identification of this boundary, shown in red.

Not included in the Condensate System License Renewal scoping are the following systems, which are separately evaluated as License Renewal systems:

Auxiliary Steam System
Closed Cycle Cooling Water Systems
Condensers & Air Removal System
Containment Isolation System
Emergency Feedwater System
Extraction Steam System
Feedwater System
Instrument and Control Air Systems
Liquid and Gas Sampling System
Miscellaneous Floor and Equipment Drain System
Radwaste Systems
Steam Turbine and Auxiliary Systems
Water Treatment & Distribution System

Reason for Scope Determination

The Condensate System meets 10 CFR 54.4(a)(1) because it is a safety-related system that is relied upon to remain functional during and following design basis events. It meets 10 CFR 54.4(a)(2) because portions of the system interfacing with the main and auxiliary condensers function as part of the pressure boundary for main condenser vacuum. The Condensate System also meets 10 CFR 54.4 (a)(2) because failure of nonsafety-related portions of the system could prevent satisfactory accomplishment of function(s) identified for 10 CFR 54.4(a)(1). It also meets 10 CFR 54.4(a)(3) because it is relied upon in the safety analyses or plant evaluations to perform a function that demonstrates compliance with the Commission's regulations for Fire Protection (10 CFR 50.48), Environmental Qualification (10 CFR 50.49), and Station Blackout (10 CFR 50.63). The Condensate System is not relied upon in any safety analyses or plant evaluations to perform a function that demonstrates compliance with the Commission's regulation for Anticipated Transient Without Scram (10 CFR 50.62) or

Pressurized Thermal Shock (10 CFR 50.61).

System Intended Functions

1. Provide a secondary heat sink. The Condensate System provides a direct suction to the Emergency Feedwater Pumps from the Condensate Storage Tanks. 10 CFR 54.4 (a)(1)
2. Resist non-safety-related SSC failure that could prevent satisfactory accomplishment of a safety-related function. The Condensate System maintains the pressure boundary for main condenser vacuum during abnormal operating conditions to support gas-to-liquid iodine partitioning in the main condenser. The Condensate System also contains nonsafety-related water-filled lines in the Intermediate and Turbine Buildings, which have potential for spatial interactions (spray or leakage) with safety-related SSC's. 10 CFR 54.4 (a)(2).
3. Relied upon in safety analyses or plant evaluations to perform a function that demonstrates compliance with the NRC's regulations for Fire Protection (10 CFR 50.48). 10 CFR 54.4 (a)(3). The Condensate System provides two alternate flowpaths from the condensate storage tanks and two alternate flowpaths from the main condenser hotwell to the emergency feedwater pumps such that spurious operation of one valve during a fire is nonconsequential.
4. Relied upon in safety analyses or plant evaluations to perform a function that demonstrates compliance with the NRC's regulations for Environmental Qualification (10 CFR 50.49). 10 CFR 54.4 (a)(3).
5. Relied upon in safety analyses or plant evaluations to perform a function that demonstrates compliance with the NRC's regulations for Station Blackout (10 CFR 50.63). 10 CFR 54.4 (a)(3). The condensate storage tanks provide cooling water to the steam generators. The inventory from both tanks provides sufficient water for decay heat removal during a Station Blackout. (UFSAR 14.1.2.8.4)

UFSAR References

1.4.6
4.2.5.4
5.1.1.1.h
5.1.1.3.b, d
7.2.3.3.c, d
10.4.1, 2, 3
14.1.2.8

License Renewal Boundary Drawings

LR-302-081
LR-302-082
LR-302-101
LR-302-102
LR-302-106
LR-302-159
LR-302-171
LR-302-172
LR-302-175
LR-302-352

Table 2.3.4-1 **Condensate System**
Components Subject to Aging Management Review

Component Type	Intended Functions
Bolting	Mechanical Closure
Expansion Joints	None - short lived
Filter Housing	Leakage Boundary
Flow Element	Leakage Boundary
Flow Element	Pressure Boundary
Heat exchanger components (Gland Steam Condenser, Low Pressure FW Heaters & Drain Coolers, Powdex Sample Coolers)	Leakage Boundary
Heat exchanger components (Gland Steam Condenser, Low Pressure FW Heaters & Drain Coolers, Powdex Sample Coolers)	Pressure Boundary
Piping and fittings	Leakage Boundary
Piping and fittings	Pressure Boundary
Pump Casing (Chemical Feed Pumps)	Leakage Boundary
Pump Casing (Condensate Booster Pumps)	Leakage Boundary
Pump Casing (Condensate Pumps)	Pressure Boundary
Pump Casing (Powdex Backwash Air Blower Oil Pump)	Leakage Boundary
Pump Casing (Powdex Backwash Pumps)	Pressure Boundary
Pump Casing (Powdex Holding, Precoat, Body Feed Pumps)	Leakage Boundary
Pump Casing (Powdex Overlay, Phase Separator, Spent Resin, Miscellaneous Drains Collection Tank Pump)	Leakage Boundary
Sight Glasses	Leakage Boundary
Sight Glasses	Pressure Boundary
Strainer Body	Leakage Boundary
Strainer Body	Pressure Boundary
Tanks (Chemical Mixing - Secondary Chemical Mix Tank, Hydrazine Injection Tank)	Leakage Boundary
Tanks (Condensate Seal Water Head Tank, Miscellaneous Drains Collection Tank)	Leakage Boundary
Tanks (Condensate Storage Tank)	Pressure Boundary
Tanks (Powdex Phase Separator, Overlay Tank, "A" Recovery Compartment)	Leakage Boundary
Tanks (Powdex Units, Powdex Slurry Tank)	Leakage Boundary
Thermowell	Leakage Boundary
Thermowell	Pressure Boundary
Valve Body	Leakage Boundary
Valve Body	Pressure Boundary

The aging management review results for these components are provided in:

Table 3.4.2-1	Condensate System Summary of Aging Management Evaluation

2.3.4.2 Condensers & Air Removal System

System Purpose

The Condensers & Air Removal System is a normally operating system designed primarily to condense and deaerate steam from the main turbine and the main feedwater pump turbines. The Condensers & Air Removal System consists of several plant systems including the Main Condenser, Main Condenser Air Removal System, Auxiliary Condensers, and Auxiliary Condensers Air Removal System.

The purpose of the Main Condenser and Auxiliary Condenser portions of the system is to recover water used in the steam cycle by condensing and deaerating unused steam. The system accomplishes this by transferring heat to the Circulating Water System (which is within the tube bundle of the condensers), collecting the condensate, and storing the condensate in the hotwell for reuse in the steam cycle.

The purpose of the Main Condenser and Auxiliary Condenser Air Removal portions of the system is to allow the main condenser and auxiliary condensers to operate at vacuum for peak efficiency. It accomplishes this by removing air and non-condensables from the main and auxiliary condensers using vacuum pumps during operation of the main turbine and main feedwater pump turbines.

The Condensers and Air Removal System is credited for gas-to-liquid iodine partitioning for the steam generator tube failure accident and the rod ejection accident. In abnormal operating conditions, the hotwell portion of the Condensers and Air Removal System provides a backup source of water for Emergency Feedwater System operation.

System Operation

The Condensers & Air Removal System consists of the steam side of the main condenser including the condenser hotwell, the steam side of the auxiliary condensers, the main vacuum pumps, the auxiliary vacuum pumps, condenser off-gas sampling equipment, and associated valves and piping.

During normal operation, exhaust steam from the low pressure sections of the main turbine is discharged into the main condenser through the exhaust hood. Within the main condenser, the steam passes over the outside of the circulating water-filled condenser tubes and forms condensate that enters the hotwell. The main vacuum pumps are provided to maintain a vacuum during operation of the main turbine by removing air and non-condensables from the main condensers.

In addition to exhaust steam from the low pressure sections of the main turbine, the main condenser receives flows from: the turbine bypass and steam dump system and moisture separators (Main Steam System); feedwater heater drains and discharges from various steam vents, relief's, and miscellaneous drains (Extraction Steam System). There are also other intermittent flows into the main condenser, such as condensate pump (Condensate System) and feedwater pump minimum recirculation flows (Feedwater System).

Exhaust steam from the main feedwater pump turbines is discharged into the auxiliary condensers (2). Within the auxiliary condensers, the steam passes over the outside of the

circulating water filled condenser tubes and forms condensate that flows from the auxiliary condensers hotwells to the main condenser hotwell. The auxiliary vacuum pumps are provided to maintain a vacuum during operation of the main feedwater pump turbines by removing air and non-condensables from the auxiliary condensers.

Because the main condenser, auxiliary condensers, and vacuum pumps operate under vacuum, the system is provided with seal water. The Condensate System supplies seal water to the expansion joints of the main condenser, to the system vacuum breakers, and to the vacuum pumps.

The main vacuum pumps include shaft driven pumps that circulate the lubricating oil through the Circulating Water System cooled lube oil heat exchangers. The auxiliary vacuum pumps include shaft driven pumps that circulate the seal water through the Circulating Water System cooled seal water cooler.

The exhaust of the main and auxiliary vacuum pumps is provided with particulate and radioiodine sampling capability and exhaust gas radiation monitors. Particulate and radioiodine sampling is used only under normal plant operating conditions to detect small increases in primary to secondary leakage that could be a precursor to a serious leakage problem. The exhaust gas radiation monitors are part of the plants Post Accident Monitoring System (included in the Radiation Monitoring System License Renewal System) and consist of area gamma monitors and atmospheric radiation monitors.

For more detailed information, see UFSAR Section 10.0.

System Boundary

The boundary of the main condenser and air removal portion of the Condensers and Air Removal System begins at the low-pressure turbine exhaust inlets and includes the main condenser shell, condenser tubes, hotwell, vacuum pumps, vacuum pump seal water and lubricating oil systems, and all associated piping, components and instrumentation. The boundary of the auxiliary condensers and air removal portion of the Condensers and Air Removal System begins at the main feedwater turbine exhaust inlets and includes the auxiliary condenser shells, condenser tubes, auxiliary vacuum pumps, auxiliary vacuum pump seal water system, and all associated piping, components and instrumentation.

Also included in the License Renewal scoping boundary of the Condensers and Air Removal System are those portions of nonsafety-related piping and equipment that extend beyond the safety-related/nonsafety-related interface up to the location of the first seismic anchor, or to a point no longer in proximity to equipment performing a safety-related function, whichever extends furthest. This includes the nonsafety-related portions of the system located within the Turbine Building. Included in this boundary are pressure retaining components relied upon to preserve the leakage boundary intended function of this portion of the system. For more information, refer to the License Renewal Boundary Drawing for identification of this boundary, shown in red.

Not included in the Condensers & Air Removal System License Renewal scoping boundary are the following systems, which are separately evaluated as License Renewal systems:

Circulating Water System

Condensate System
Emergency Feedwater System
Extraction Steam System
Feedwater System
Main Steam System
Radiation Monitoring System
Steam Turbine and Auxiliaries System

Reason for Scope Determination

The Condensers and Air Removal System is not in scope under 10 CFR 54.4(a)(1) because no portions of the system are safety-related and relied upon to remain functional during and following design basis events. It meets 10 CFR 54.4(a)(2) because failure of nonsafety-related portions of the system could prevent satisfactory accomplishment of function(s) identified for 10 CFR 54.4(a)(1) or function(s) that prevent or mitigate the consequences of accidents. It also meets 10 CFR 54.4(a)(3) because it is relied upon in the safety analyses or plant evaluations to perform a function that demonstrates compliance with the Commission's regulations for Fire Protection (10 CFR 50.48). The Condensers and Air Removal System is not relied upon in any safety analyses or plant evaluations to perform a function that demonstrates compliance with the Commission's regulation for Environmental Qualification (10 CFR 50.49), Pressurized Thermal Shock (10 CFR 50.61), Anticipated Transient Without Scram (10 CFR 50.62), or Station Blackout (10 CFR 50.63).

System Intended Functions

1. Resist nonsafety-related SSC failure that could prevent satisfactory accomplishment of a safety-related function. The Condensers and Air Removal System is credited for gas-to-liquid iodine partitioning for the steam generator tube failure accident and the rod ejection accident. The Condensers and Air Removal System also contains nonsafety-related water filled lines in the Turbine Building which have the potential for spatial interactions (spray or leakage) with safety-related SSCs. 10 CFR 54.4(a)(2)
2. Relied upon in safety analyses or plant evaluations to perform a function that demonstrates compliance with the commission's regulations for Fire Protection (10 CFR 50.48). The hotwell portion of the Condensers and Air Removal System provides a backup source of water for Emergency Feedwater System operation. 10 CFR 54.4(a)(3)

UFSAR References

1.3.2.23
1.3.2.32
1.4.6
1.4.16
4.2.3.4
4.2.5.4
4.3.10.2
5.1.1.1.h
5.1.1.3.d
7.3
9.2.2.1
9.2.2.6
9.6.2.1

10.0
11.4.5
14.0

License Renewal Boundary Drawings

LR-302-011
LR-302-081
LR-302-101
LR-302-102
LR-302-111
LR-302-112
LR-302-121
LR-302-131
LR-302-132
LR-302-141
LR-302-196
LR-302-201
LR-302-719

Table 2.3.4-2 **Condensers & Air Removal System**
Components Subject to Aging Management Review

Component Type	Intended Functions
Bolting	Mechanical Closure
Expansion Joints	None - Short Lived
Filter Housing	Pressure Boundary
Flow Device	Pressure Boundary
Heat exchanger components (Auxiliary Condenser Shell and Hotwell)	Pressure Boundary
Heat exchanger components (Auxiliary Condenser Tubes and Tubesheets)	Pressure Boundary
Heat exchanger components (Auxiliary Condenser Water Boxes)	Pressure Boundary
Heat exchanger components (Auxiliary Vacuum Pump Seal Water Cooler)	Evaluated with the Circulating Water System
Heat exchanger components (Main Condenser Shell and Hotwell)	Pressure Boundary
Heat exchanger components (Main Condenser Tubes and Tubesheets)	Heat Transfer
Heat exchanger components (Main Condenser Tubes and Tubesheets)	Pressure Boundary
Heat exchanger components (Main Condenser Water Boxes)	Pressure Boundary
Heat exchanger components (Main Vacuum Pump Lube Oil Heat Exchanger)	Evaluated with the Circulating Water System
Heat exchanger components (Main Vacuum Pump Seal Water Cooler)	Evaluated with the Circulating Water System
Hoses	Pressure Boundary
Piping and fittings	Leakage Boundary
Piping and fittings	Pressure Boundary
Pump Casing (Auxiliary Vacuum Pump Seal Water)	Pressure Boundary
Pump Casing (Main Vacuum Pump Lube Oil)	Pressure Boundary
Pump Casing (Vacuum Pumps)	Pressure Boundary
Sight Glasses	Pressure Boundary
Strainer Body	Pressure Boundary
Tanks (Inlet Separators)	Pressure Boundary
Tanks (Seal Water Reservoirs)	Pressure Boundary
Thermowell	Pressure Boundary
Valve Body	Pressure Boundary

The aging management review results for these components are provided in:

Table 3.4.2-2	Condensers & Air Removal System Summary of Aging Management Evaluation

2.3.4.3 Emergency Feedwater System

System Purpose

The Emergency Feedwater System is a standby system designed to remove heat from the primary system when the normal feedwater supply is not available. The Emergency Feedwater System is capable of holding the plant at hot standby and is also capable of cooling down the plant to the point where the normal Decay Heat Removal System can operate. The system is not required for plant start-up, normal plant operations or normal shutdown. The system is used only during emergency conditions and periodic testing.

The purpose of the Emergency Feedwater System is to remove heat (including Reactor Coolant pump energy, decay and sensible heat) from the Reactor Coolant System to allow safe shutdown of the reactor when the Feedwater System is not available. The Emergency Feedwater System accomplishes this purpose by delivering water to the Once Through Steam Generators (OTSGs) from various water sources.

The Emergency Feedwater System operation is initiated automatically on loss of both main Feedwater System pumps, loss of all four Reactor Coolant pumps, low OTSG water level, high containment pressure, or, it can be initiated manually. The Emergency Feedwater System will automatically control feedwater flow to maintain water level in the OTSGs. The water level setpoint is based on the status of the Reactor Coolant pumps. OTSG water levels are maintained higher when all Reactor Coolant pumps are off to promote natural circulation in the Reactor Coolant System. Manual control of the Emergency Feedwater flow to each of the OTSG is also available to the operator in the Main Control Room.

The Emergency Feedwater System is designed so that a single failure will not result in the loss of Emergency Feedwater System function during a LOCA or during a loss of offsite power. The Emergency Feedwater System is capable of providing Emergency Feedwater flow to the OTSGs for at least two hours without relying on alternating current (AC) power (Station Blackout).

System Operation

The Emergency Feedwater System consists of three (3) pumps, independently powered from diverse sources, and associated piping, valves, instrumentation, and controls. Two (2) motor-driven pumps are powered from separate Class 1E electrical trains. One (1) turbine-driven pump is powered by steam supplied by the Main Steam lines or by plant Auxiliary Steam.

The motor-driven and turbine driven Emergency Feedwater pumps automatically start on loss of both main Feedwater pumps, loss of all four Reactor Coolant pumps, high containment pressure, or low OTSG water level. Automatic initiation of the Emergency Feedwater System is accomplished by the Heat Sink Protection System. The motor driven Emergency Feedwater pumps are automatically loaded on the Emergency Diesel Generator during loss of offsite power coincident with an Emergency Feedwater System actuation.

The Emergency Feedwater pumps take suction, through separate lines, from the two (2) condensate storage tanks, the primary sources, and from the condenser hot well, and demineralized water storage tank. As a final backup source, river water can be utilized via the Reactor Building Emergency Cooling Water System pumps. All three Emergency Feedwater

pumps discharge into a common header. Off of this common header, a separate supply line delivers water to each of the OTSGs. Each OTSG supply line has two (2) redundant flow control paths, a flow limiting venturi to limit the flow to a depressurized OTSG (minimizing RCS overcooling potential), and a check valve. Each redundant flow control path consists of an automatic control valve and a manual isolation valve.

The Emergency Feedwater control valves are air operated and are supplied from the main instrument air compressors, or from the station service air compressors. The main instrument air compressors can be manually loaded on the emergency bus from the engineered safeguards motor control center in case of a loss of offsite power. In the event that the two normal sources of instrument air are lost, the control valve air supply is automatically transferred to the 2-hr. backup instrument air supply system. No single failure can result in loss of air or control power to the control valves. The Emergency Feedwater flow control valves fail closed upon loss of all air. This failure mode reduces the potential for severe overcooling transients. Adequate time is available to the operator to take action to open a flow control valve and restore flow should the flow control valves fail closed. A failure of one (1) Emergency Feedwater flow control valve in the closed position will not prevent Emergency Feedwater flow control to either OTSG.

Each Emergency Feedwater pump is protected by minimum flow recirculation lines back to the “B” condensate storage tank. The bearings and lantern rings of the Emergency Feedwater pumps are cooled by the fluid being pumped.

A spectacle flange is installed between normally closed isolation valves on the river water supply line to the Emergency Feedwater pumps. The function of this spectacle flange is to prevent the introduction of river water to the inlet of the Emergency Feedwater pumps during surveillance testing, preventing possible contamination by river water of the OTSGs. The spectacle flange will normally have the blind side in place. In the event of an emergency, the spectacle flange may be unbolted and turned to the open side to allow river water to go into the Emergency Feedwater System.

The motor-driven Emergency Feedwater pumps are seismically qualified and are capable of meeting minimum flow requirements for safe shutdown during a loss of feedwater or a small break LOCA following a seismic event. The Emergency Feedwater System can withstand a single active failure, resulting in one motor-driven pump providing the system function. The turbine-driven Emergency Feedwater pump is not seismically qualified.

For more detailed information, see UFSAR Section 10.6.

System Boundary

The Emergency Feedwater System License Renewal scoping boundary begins with the attachment points of the common Emergency Feedwater pump suction header to two (2) separate condensate storage tank supplies at the Condensate to Emergency Feedwater pumps check valves. The scoping boundary also includes an alternate supply from the discharge of the Reactor Building Emergency Cooling Water System pumps upstream of two (2) normally closed isolation valves. The scoping boundary continues through the common pump suction header which then branches off into three (3) parallel pump suction supplies for the two (2) motor driven Emergency Feedwater pumps and the one (1) turbine driven Emergency Feedwater pump. The three (3) Emergency Feedwater pumps discharge into a common header from which two (2) separate lines, each containing a check valve, flow-limiting

venturi, and two (2) flow control paths, deliver feedwater to each of the two (2) steam generators through a feedwater nozzle ring and seven (7) feed nozzles (evaluated with the OTSG).

Included in the Emergency Feedwater System scoping boundary is a minimum flow recirculation line from each of the system pumps. These three (3) recirculation lines combine into a single line prior to returning to the "B" condensate storage tank through the minimum flow recirculation return valve. Also included in the scoping boundary of the Emergency Feedwater System is the Emergency Feedwater pump bearing and lantern ring cooling piping and components. This portion of the system begins at the motor driven and turbine driven pumps, continues through the pump bearings and lantern rings, and returns back from the bearings to the two (2) pump suction lines from the condensate storage tanks through separate return check valves.

The Emergency Feedwater System scoping boundary also includes the steam driven turbine and its associated governor valve, emergency stop valve, and exhaust stack.

Also included in the License Renewal scoping boundary of the Emergency Feedwater System are those portions of nonsafety-related piping and equipment that extend beyond the safety-related/nonsafety-related interface up to the location of the first seismic anchor, or to a point no longer in proximity to equipment performing a safety-related function, whichever extends furthest. This includes the nonsafety-related portions of the system located within the Reactor Building and the Intermediate Building. Included in this boundary are pressure retaining components relied upon to preserve the leakage boundary intended function of this portion of the system. For more information, refer to the License Renewal Boundary Drawing for identification of this boundary, shown in red.

Not included in the Emergency Feedwater System License Renewal scoping boundary are the following systems, which are separately evaluated as License Renewal systems:

Auxiliary Steam System
Condensate System
Condensers & Air Removal System
Emergency Diesel Generators and Auxiliary System
Instrument and Control Air System
Main Steam System
Plant Protective System
Primary Containment Heating and Ventilation System
Steam Generator
Water Treatment & Distribution System

Reason for Scope Determination

The Emergency Feedwater System meets 10 CFR 54.4(a)(1) because it is a safety-related system that is relied upon to remain functional during and following design basis events. It meets 10 CFR 54.4(a)(2) because failure of nonsafety-related portions of the system could prevent satisfactory accomplishment of function(s) identified for 10 CFR 54.4(a)(1). It also meets 10 CFR 54.4(a)(3) because it is relied upon in the safety analyses or plant evaluations to perform a function that demonstrates compliance with the Commission’s regulations for Fire

Protection (10 CFR 50.48), Environmental Qualification (10 CFR 50.49), Anticipated Transient Without Scram (10 CFR 50.62), and Station Blackout (10 CFR 50.63). The Emergency Feedwater System is not relied upon in any safety analyses or plant evaluations to perform a function that demonstrates compliance with the Commission's regulation for Pressurized Thermal Shock (10 CFR 50.61).

System Intended Functions

1. Remove residual heat from the Reactor Coolant System. The Emergency Feedwater System provides an alternate source of feedwater to the Once Through Steam Generators, removing heat (including Reactor Coolant pump energy, decay and sensible heat) from the Reactor Coolant System to allow safe shutdown of the reactor for events where the main Feedwater System is unavailable. The Emergency Feedwater System also provides for a smooth transition to natural circulation cooling of the Reactor Coolant System upon loss of the Reactor Coolant pumps. 10 CFR 54.4(a)(1)
2. Provide secondary heat sink. The Emergency Feedwater System provides an alternate source of feedwater to the Once Through Steam Generators, removing heat (including Reactor Coolant pump energy, decay and sensible heat) from the Reactor Coolant System to allow safe shutdown of the reactor for events where the main Feedwater System is unavailable. The Emergency Feedwater System also provides for a smooth transition to natural circulation cooling of the Reactor Coolant System upon loss of the Reactor Coolant pumps. 10 CFR 54.4(a)(1)
3. Provide primary containment boundary. The Emergency Feedwater System includes Reactor Building isolation valves to assure that radioactive material is not inadvertently transferred out of the Reactor Building. 10 CFR 54.4(a)(1)
4. Resist nonsafety-related SSC failure that could prevent satisfactory accomplishment of a safety-related function. The Emergency Feedwater System contains nonsafety-related water or steam filled lines in the Intermediate Building and in the Reactor Building which have the potential for spatial interactions (spray or leakage) with safety-related SSCs. 10 CFR 54.4(a)(2)
5. Relied upon in safety analyses or plant evaluations to perform a function that demonstrates compliance with the commission's regulations for Fire Protection (10 CFR 50.48). 10 CFR 54.4(a)(3)
6. Relied upon in safety analyses or plant evaluations to perform a function that demonstrates compliance with the commission's regulations for Environmental Qualification (10 CFR 50.49). 10 CFR 54.4(a)(3)
7. Relied upon in safety analyses or plant evaluations to perform a function that demonstrates compliance with the commission's regulations for Anticipated Transient Without Scram (10 CFR 50.62). 10 CFR 54.4(a)(3)
8. Relied upon in safety analyses or plant evaluations to perform a function that demonstrates compliance with the commission's regulations for Station Blackout (10 CFR 50.63). 10 CFR 54.4(a)(3)

UFSAR References

1.3.2.20
1.3.2.21
4.2.5.4
5.3
7.1.4
7.3.2.2.c.16
9.8.6

9.10.3
10.6
14.0

License Renewal Boundary Drawings

LR-302-011
LR-302-032
LR-302-082
LR-302-101
LR-302-196
LR-302-611

Table 2.3.4-3 **Emergency Feedwater System**
Components Subject to Aging Management Review

Component Type	Intended Functions
Bolting	Mechanical Closure
Flexible Connection	Pressure Boundary
Flow Device	Pressure Boundary
Flow Element	Pressure Boundary
Flow Element	Throttle
Flow Venturi	Pressure Boundary
Flow Venturi	Throttle
Piping and fittings	Leakage Boundary
Piping and fittings	Pressure Boundary
Pump Casing (Motor Driven)	Pressure Boundary
Pump Casing (Steam Driven)	Pressure Boundary
Sight Glasses	Pressure Boundary
Steam Traps	Pressure Boundary
Strainer Body	Pressure Boundary
Strainer Element	Filter
Thermowell	Pressure Boundary
Turbine Casing	Pressure Boundary
Valve Body	Pressure Boundary

The aging management review results for these components are provided in:

Table 3.4.2-3 Emergency Feedwater System
Summary of Aging Management Evaluation

2.3.4.4 Extraction Steam System

System Purpose

The Extraction Steam System consists of the following plant systems: Extraction Steam (High Pressure & Low Pressure) System, Feedwater Heater Drains System, and the Feedwater Heater Vents, Reliefs, and Miscellaneous Drains System. The Extraction Steam System is in scope for License Renewal. The Extraction Steam System has several interfaces with other systems that are not within the License Renewal boundary of the Extraction Steam System.

The Extraction Steam System is a normally operating system designed to deliver steam from the high and low pressure sections of the Main Turbine to secondary side plant components. Steam is delivered to the feedwater heaters for feedwater preheating, which improves overall plant efficiency. Steam is also delivered to the following components to support their process functions: main feedwater pump turbines, radioactive waste evaporators, auxiliary boilers, and the caustic solution heater used for mixed bed regeneration. The Extraction Steam System includes the heater drain pumps, which return condensed steam from the sixth stage collection drain tank to the Feedwater System, heater vents that discharge non-condensable gases to the moisture separators and the main condenser, and relief valves that discharge through a common header to atmosphere. During normal and abnormal operating conditions, due to its interfaces with the main condenser, the Extraction Steam System functions as part of the pressure boundary for main condenser vacuum. Main condenser vacuum boundary is required to mitigate the steam generator tube failure accident and the rod ejection accident.

System Operation

The Extraction Steam System is comprised of piping, valves, and instrumentation used to direct steam to components served by the system, to return condensed steam to the Feedwater System, to vent non-condensable gases to the moisture separators and main condenser, and to provide system overpressure protection.

During startup, only one of the two strings of feedwater heaters is utilized. For normal operation, both feedwater heater strings are placed in service. Extraction steam flow is initiated when steam is admitted to the main turbine.

System Boundary

The License Renewal scoping boundary of the Extraction Steam System encompasses those portions of the system interfacing with the main condenser, part of the Condenser and Air Removal System, to form the pressure boundary for main condenser vacuum. The License Renewal Boundary also includes those portions of the system located in proximity to equipment performing a safety-related function. This includes the liquid and steam filled portions of the system located within the Turbine Building. Included in this boundary are pressure-retaining components relied upon to preserve the leakage boundary intended functions of this system. For more information, refer to the License Renewal Boundary Drawings for identification of these boundaries.

Not included in the Extraction Steam System license renewal scoping are the following systems, which are separately evaluated as license renewal systems:

Auxiliary Steam System

Condensate System
Condensers & Air Removal System
Feedwater System
Main Steam System
Miscellaneous Floor and Equipment Drains
Steam Turbine and Auxiliary Systems
Water Treatment and Distribution System

Reason for Scope Determination

The Extraction Steam System meets 10CFR54.4(a)(1) because it is a system that is relied upon to remain functional during and following design basis events. It meets 10CFR54.4(a)(2) because failure of nonsafety-related portions of the system could prevent satisfactory accomplishment of function(s) identified for 10CFR54.4(a)(1). The Extraction Steam System is not in scope under 10 CFR 54.4(a)(3) because it is not relied upon in safety analyses or plant evaluations to perform a function that demonstrates compliance with the Commission's regulations for Fire Protection (10 CFR 50.48), Environmental Qualification (10 CFR 50.49), Pressurized Thermal Shock (10 CFR 50.61), Anticipated Transient Without Scram (10 CFR 50.62), and Station Blackout (10 CFR 50.63).

System Intended Functions

1. Resist nonsafety-related SSC failure that could prevent satisfactory accomplishment of a safety-related function. Portions of the Extraction Steam System are included within the main condenser vacuum boundary, which is required to mitigate the steam generator tube failure accident and the rod ejection accident. The Extraction Steam System also contains nonsafety-related water and steam filled lines in the Turbine Building, which have potential for spatial interactions (spray or leakage) with safety-related SSC's. 10 CFR 54.4 (a)(2).

UFSAR References

10.3.3
Table 10.4-1
14.1.2.10
14.2.2.2

License Renewal Boundary Drawings

LR-302-011
LR-302-041
LR-302-042
LR-302-043
LR-302-051
LR-302-111
LR-302-112
LR-302-121
LR-302-162
LR-302-163

Table 2.3.4-4 **Extraction Steam System**
Components Subject to Aging Management Review

Component Type	Intended Functions
Bolting	Mechanical Closure
Expansion Joints	Pressure Boundary
Flow Element	Pressure Boundary
Heat exchanger components (Caustic Heater - shell side)	Leakage Boundary
Heat exchanger components (High Pressure Feedwater Heaters)	Evaluated with the Feedwater System
Heat exchanger components (Low Pressure FW Heaters)	Evaluated with the Condensate System
Piping and fittings	Leakage Boundary
Piping and fittings	Pressure Boundary
Pump Casing (Heater Drain Pumps)	Pressure Boundary
Sight Glasses	Pressure Boundary
Steam Traps	Pressure Boundary
Strainer Body	Leakage Boundary
Tanks (6th Stg Htr Drns Collection Tank, LP Moisture Drns Collection Tank)	Pressure Boundary
Thermowell	Pressure Boundary
Valve Body	Leakage Boundary
Valve Body	Pressure Boundary

The aging management review results for these components are provided in:

Table 3.4.2-4 Extraction Steam System
Summary of Aging Management Evaluation

2.3.4.5 Feedwater System

System Purpose

The Feedwater System is a normally operating system designed to maintain level in the Once Through Steam Generators (OTSGs). The Feedwater System is not required for safe plant shutdown or for maintaining the plant in the shutdown condition. The Feedwater System consists of several plant systems including the Main Feedwater System, Main Feed Pump Turbines and Auxiliaries System, and Feedwater Pump Shaft Seals & Leakoffs System.

The purpose of the Feedwater System is to maintain level in the OTSGs throughout all modes of normal plant operation. The Feedwater System accomplishes this by further heating deaerated, treated, and preheated condensate from the Condensate System and delivering it to the OTSGs. The Feedwater System delivers the water to the OTSGs to match the steam demand for the turbine load.

The Feedwater System isolation and regulating valves automatically close to stop flow to the OTSGs on Hi-Hi OTSG level or indication of a Feedwater or Main Steam System line break. Feedwater System isolation must be provided during an Appendix R Shutdown and is accomplished through the manual closure of the Feedwater System isolation or regulating valves. The feedwater line to each OTSG is also provided with a check valve which serves as the reactor building isolation valve. The Feedwater System pump turbine casing, pump recirculation line, and secondary side drains are necessary to establish the main condenser vacuum boundary which is required to mitigate the steam generator tube failure accident and the rod ejection accident.

System Operation

The Feedwater System consists of two (2) 60 percent capacity steam turbine driven Feedwater pumps that take suction from a common suction header fed by the Condensate System and heater drain pumps. One (1) Feedwater pump is used normally to 40 percent power and then the second pump is started. The Feedwater pumps discharge through separate discharge lines into a common discharge header. From this header, feedwater continues through the tube side of two high pressure heater strings which include the 4th and 2nd stage extraction heaters. The feedwater is then joined into a common discharge mixing header from the heater strings and then flows through separate lines to each of the two OTSGs. Each OTSG supply line contains two flow regulating paths. For startup or low load operation, a smaller regulating valve is provided in parallel with the main Feedwater regulating valve. The Feedwater System regulating valves are pneumatically operated and provided with safety-related air accumulators. Also, for startup and hot standby operations, a small bypass line and manual valve are installed around each of the main Feedwater air operated regulating valves. Both the main and low load regulating paths also include a motor operated isolation valve powered from engineered safeguards motor control centers. The Feedwater System isolation and regulating valves automatically close to stop flow to the OTSGs on Hi-Hi OTSG level or indication of a Feedwater or Main Steam System line break. Prior to entering the Reactor Building, each OTSG supply line includes a Reactor Building isolation check valve. At the steam generators, the feedwater enters the ring header and from there flows into each OTSG.

The Feedwater System includes a bypass line around the main Feedwater pumps which connects the pumps' suction header with their discharge header. This line is used during plant

heatup when operation of the Feedwater pumps is not required.

The Feedwater System includes a bypass around the high pressure heater strings which is used when any string of heaters must be bypassed to perform heater maintenance.

The Feedwater System includes a cleanup recycle line from the HP heater outlet mixing header to either the main condenser or the 12th stage extraction steam header. These lines are used during plant startup with Feedwater pump operation and feedwater flow to the OTSGs is not required. These lines are also used for feedwater cleanup during plant operation.

The Feedwater System includes Feedwater pump minimum recirculation lines which run from each pump discharge pipe to the main condenser.

The shaft seals in the Feedwater System pumps are supplied with sealing water from the Condensate Booster Pumps. Sealing water is returned to the Condensate System to either the Miscellaneous Drains Collection Tanks (low pressure seals) or to the suction header of the Condensate Booster Pumps (high pressure seals).

Each Feedwater pump turbine includes a lubricating and hydraulic oil system consisting of an oil reservoir tank, two motor driven pumps, a shaft driven pump, two (2) oil coolers, two (2) oil filters, pressure regulating valves, and associated piping and instrumentation. The lubricating and hydraulic oil system includes oil pressure instrumentation that provides a signal to the Feedwater pump trip logic to trip the main turbine upon loss of feedwater flow during an ATWS event. The Feedwater pump turbine lubricating and hydraulic oil system oil pressure instrumentation also provides a signal to the Reactor Protection System (RPS) for anticipatory trip of the reactor.

The Feedwater System includes OTSG startup range, operating range, and full range level transmitters and their associated reference leg temperature elements. These instruments are environmentally qualified and initiate automatic safety functions or provide indication for manual actuation of safety-related equipment. This level instrumentation is required to withstand and recover from an SBO event. The Feedwater System also includes instrumentation for OTSG shell temperature and downcomer temperature. This instrumentation is not safety-related, does not initiate automatic safety functions, and is not environmentally qualified.

The Feedwater System includes OTSG secondary side drain lines. Normally closed manual drain line isolation valves maintain the pressure boundary integrity of the secondary side of the OTSGs and the vacuum boundary of the Main Condenser.

For more detailed information, see UFSAR Section 10.5.

System Boundary

The Feedwater System License Renewal scoping boundary begins at the two (2) turbine driven Feedwater pumps and continues through separate discharge lines into a common discharge header. From this header, feedwater continues through the tube side of two high pressure heater strings which include the 4th and 2nd stage extraction heaters. The feedwater is then joined in a common discharge mixing header from the heater strings and then from this header

flows through individual lines, each containing Feedwater isolation valves, a main control valve, a low load control valve, and a Reactor Building isolation valve, to each of the OTSGs. At the steam generators the feedwater enters the ring header and from there flows into each OTSG. Included in the Feedwater System scoping boundary is a bypass line around the main Feedwater pumps which connects the pumps suction header with their discharge header, a bypass line around the high pressure heater strings, a cleanup recycle line from the HP heater outlet header to either the main condenser or the 12th stage extraction steam header, and two (2) recirculation lines from the Feedwater pump discharge lines to the main condenser.

The Feedwater System License Renewal scoping boundary includes the Feedwater pumps shaft seals and leakoff piping and the steam driven turbines and their associated lubricating and hydraulic oil systems. Each turbine lubricating and hydraulic oil system includes an oil storage tank, two motor driven pumps, a shaft driven pump, two (2) oil coolers, two (2) oil filters, pressure regulating valves, and associated piping and instrumentation.

The Feedwater System License Renewal scoping boundary includes OTSG startup range, operating range, and full range level transmitters, reference leg temperature elements, and all associated piping, tubing and instrumentation root valves. The Feedwater System scoping boundary also includes the pressure retaining portions of the OTSG shell temperature and downcomer temperature instrumentation and its associated piping, tubing, and instrumentation root valves.

The Feedwater System License Renewal scoping boundary includes OTSG secondary side drain lines. Normally closed manual drain line isolation valves maintain the pressure boundary integrity of the secondary side of the OTSGs and the vacuum boundary of the Main Condenser.

Also included in the License Renewal scoping boundary of the Feedwater System are those portions of nonsafety-related piping and equipment that extend beyond the safety-related/nonsafety-related interface up to the location of the first seismic anchor, or to a point no longer in proximity to equipment performing a safety-related function, whichever extends furthest. This includes the nonsafety-related portions of the system located within the Reactor Building, Intermediate Building, and the Turbine Building. Included in this boundary are pressure retaining components relied upon to preserve the leakage boundary intended function of this portion of the system. For more information, refer to the License Renewal Boundary Drawing for identification of this boundary, shown in red.

Not included in the Feedwater System License Renewal scoping boundary are the following systems, which are separately evaluated as License Renewal systems:

Closed Cycle Cooling Water System
Condensate System
Condensers & Air Removal System
Extraction Steam System
Instrument and Control Air System
Main Steam System
Miscellaneous Floor and Equipment Drains System
Plant Protective System
Steam Generator

Reason for Scope Determination

The Feedwater System meets 10 CFR 54.4(a)(1) because it is a safety-related system that is relied upon to remain functional during and following design basis events. It meets 10 CFR 54.4(a)(2) because failure of nonsafety-related portions of the system could prevent satisfactory accomplishment of function(s) identified for 10 CFR 54.4(a)(1). It also meets 10 CFR 54.4(a)(3) because it is relied upon in the safety analyses or plant evaluations to perform a function that demonstrates compliance with the Commission's regulations for Fire Protection (10 CFR 50.48), Environmental Qualification (10 CFR 50.49), Anticipated Transient Without Scram (10 CFR 50.62), and Station Blackout (10 CFR 50.63). The Feedwater System is not relied upon in any safety analyses or plant evaluations to perform a function that demonstrates compliance with the Commission's regulation for Pressurized Thermal Shock (10 CFR 50.61).

System Intended Functions

1. Provide primary containment boundary. The Feedwater System includes Reactor Building isolation valves and piping up to the OTSG's to assure that radioactive material is not inadvertently transferred out of the Reactor Building. 10 CFR 54.4(a)(1)
2. Provide secondary heat sink. The Feedwater System includes piping and components necessary to ensure steam generator secondary integrity. 10 CFR 54.4(a)(1)
3. Sense process conditions and generate signals for reactor trip or engineered safety features actuation. The Feedwater System includes safety-related OTSG level instrumentation that initiates automatic safety functions or provides indication for manual actuation of safety-related equipment. The Feedwater pump turbine hydraulic oil pressure instrumentation provides a signal to the Reactor Protection System (RPS) for anticipatory trip of the reactor. 10 CFR 54.4(a)(1)
4. Resist nonsafety-related SSC failure that could prevent satisfactory accomplishment of a safety-related function. The Feedwater System pump turbine casing, pump recirculation line, and secondary side drains are necessary to establish the main condenser vacuum boundary which is required to mitigate the steam generator tube failure accident and the rod ejection accident. The Feedwater System also contains nonsafety-related water filled lines in the Reactor Building, Intermediate Building, and Turbine Building which have the potential for spatial interactions (spray or leakage) with safety-related SSCs. 10 CFR 54.4(a)(2)
5. Relied upon in safety analyses or plant evaluations to perform a function that demonstrates compliance with the commission's regulations for Fire Protection (10 CFR 50.48). Appendix R requires an assumption of loss of off-site power for fire events. The main Feedwater System is not available after a loss of off-site power. Trip of the main Feedwater pump turbines and Feedwater System isolation may be required to prevent OTSG overfill. This is the only operation required for safe shutdown under Appendix R. 10 CFR 54.4(a)(3)
6. Relied upon in safety analyses or plant evaluations to perform a function that demonstrates compliance with the commission's regulations for Environmental Qualification (10 CFR 50.49). 10 CFR 54.4(a)(3)
7. Relied upon in safety analyses or plant evaluations to perform a function that demonstrates compliance with the commission's regulations for Anticipated Transient Without Scram (10 CFR 50.62). The Feedwater System pumps trip logic is required to trip the main turbine in the event of a loss of main Feedwater pumps as sensed by pressure switches monitoring the hydraulic oil pressure of the main Feedwater pump turbines. 10 CFR 54.4(a)(3)
8. Relied upon in safety analyses or plant evaluations to perform a function that demonstrates compliance with the commission's regulations for Station Blackout (10 CFR 50.63). The Feedwater System includes OTSG level instrumentation that is required to withstand and recover from an SBO event. 10 CFR 54.4(a)(3)

UFSAR References

5.3
7.1.2
7.3.2
10.5
10.7
14.0

License Renewal Boundary Drawings

LR-302-011
LR-302-032
LR-302-081
LR-302-101
LR-302-102
LR-302-111
LR-302-112
LR-302-121
LR-302-196
LR-302-280 shts. 1 and 2
LR-302-281
LR-302-719

Table 2.3.4-5 **Feedwater System**
Components Subject to Aging Management Review

Component Type	Intended Functions
Bolting	Mechanical Closure
Filter Housing (Dual Oil Filter)	Leakage Boundary
Flow Device	Leakage Boundary
Flow Element	Leakage Boundary
Flow Element	Pressure Boundary
Flow Venturi	Leakage Boundary
Heat exchanger components (Dual Oil Cooler)	Leakage Boundary
Heat exchanger components (H.P. Heater)	Leakage Boundary
Heat exchanger components (H.P. Heater)	Pressure Boundary
Piping and fittings	Leakage Boundary
Piping and fittings	Pressure Boundary
Pump Casing (Main Feedwater)	Leakage Boundary
Pump Casing (Turbine Driven Main Oil)	Leakage Boundary
Tanks (Oil Reservoir)	Leakage Boundary
Thermowell	Leakage Boundary
Thermowell	Pressure Boundary
Turbine Casing	Pressure Boundary
Valve Body	Leakage Boundary
Valve Body	Pressure Boundary

The aging management review results for these components are provided in:

Table 3.4.2-5 Feedwater System
Summary of Aging Management Evaluation

2.3.4.6 Main Generator and Auxiliary Systems

System Purpose

The intended function of the Main Generator and Auxiliary System for License Renewal is to maintain leakage boundary integrity to preclude system interactions. For this reason, this system's pressure retaining components located in proximity to other components performing safety-related functions have been included in the scope of License Renewal. This system is not required to operate to support License Renewal intended functions, and is in scope for potential spatial interaction.

The Main Generator and Auxiliary System is a normally operating system designed to convert the mechanical energy of the Main Turbine into electrical energy for distribution to the grid. The Main Generator and Auxiliary System consists of several plant systems including the Main Generator, Main Generator Excitation System, Isolated Phase Bus Duct Cooling System, Generator Seal Oil System, Generator Hydrogen Cooling System, Generator Gas & Vents System, and Stator Cooling System.

The purpose of the Main Generator and Auxiliary System is to produce electricity. The system accomplishes this by converting mechanical energy provided by the Main Turbine into electrical energy. The electrical energy produced by the Main Generator is fed through an isolated phase bus to the main transformers for distribution to the grid.

System Operation

The Main Generator and Auxiliary System consists of the Main Generator and supporting plant systems including the Main Generator Excitation System, Isloated Phase Bus Duct Cooling System, Generator Seal Oil System, Generator Hydrogen Cooling System, Generator Gas & Vents System, and Stator Cooling System. The Main Generator and its supporting systems operate jointly to generate electricity for distribution to the grid.

The Main Generator is a hydrogen and water cooled unit connected directly to the Main Turbine. It is rated for 1,037,900kVA at 1800 rpm. The Main Generator consists of a stator frame, stator core, liquid cooled stator windings, and rotor. The stator frame is a gas tight casing that contains and supports the stator core and its windings, the rotor, and includes multiple paths for directing hydrogen gas cooling flow throughout the generator. Main Generator operation is supported by the Main Generator Excitation System, which controls the voltage output of the Main Generator by controlling its excitation. The Main Generator Excitation System uses a smaller alternating current (AC) generator (exciter) driven from the Main Generator rotor as a power source for excitation. The AC voltage from the exciter is rectified by a group of power rectifiers to furnish direct current (DC) to the Main Generator field.

The Main Generator output is fed through an isolated phase bus to the unit main transformer bank. Isolated phase bus duct cooling is provided by the Isolated Phase Bus Duct Cooling System which uses a forced air, closed loop cooling system. The Isolated Phase Bus Duct Cooling System is a self-contained unit that consists of an inlet windbox, filter unit, dampers, fans, coolers, and an outlet windbox. Cool air is discharged from the outlet windbox into the bus duct assemblies. The air travels the length of the bus duct and returns to the bus duct cooling unit through the inlet windbox. The air leaves the inlet windbox through dampers and

enters the suction side of the fans. The air is discharged from the fans through a wire mesh filter section, through a cooler section, and finally through a filter/moisture removal section prior to being recirculated back into the bus ducts via the outlet windbox. Secondary Services Closed Cooling Water (Closed Cycle Cooling Water System) provides cooling to the isolated phase bus duct coolers.

Closed loop hydrogen cooling is provided to the generator components (except the stator winding internals) by the Generator Hydrogen Cooling System and the Generator Gas & Vents System. The Generator Hydrogen Cooling System consists of two (2) banks of six (6) hydrogen storage bottles each and a pressure regulating control unit. The pressure regulating control unit consists of two (2) pressure reducing regulators, block and safety valves, and pressure gauges. The Generator Gas & Vents System includes a hydrogen control panel which monitors the hydrogen gas flow to the Main Generator. Four (4) coolers serviced by Secondary Services Closed Cooling Water (Closed Cycle Cooling Water System) provide for generator hydrogen cooling.

Stator winding cooling is provided by the Stator Cooling System. The Stator Cooling System consists of a Stator Winding Cooling Pump Unit that includes the Generator Stator Coolant Storage Tank, two (2) Generator Stator Coolant Pumps, two (2) Stator Water Coolers serviced by Secondary Services Closed Cooling Water (Closed Cycle Cooling Water System), a temperature regulating valve, a pressure regulating valve, and a purifying filter and deionizer. During normal operation, one (1) stator coolant pump is in operation taking suction on the stator coolant storage tank and discharging to the coolers inlet and bypass line. A temperature-regulating valve on the coolers outlet determines how much flow is routed through the coolers and how much flow bypasses the coolers. Downstream of the temperature-regulating valve, a small portion of the system flow is then diverted to a purification loop consisting of a deionizer and returned to the stator coolant storage tank. The remainder of the flow passes through a pressure-regulating valve, the system filter and then to the Main Generator and rectifier supply headers. Flow from the Main Generator and rectifiers is returned to the stator coolant storage tank.

Generator seal oil is provided by the Generator Seal Oil System. The Generator Seal Oil System consists of a Seal Oil Unit that includes the Seal Oil Vacuum Tank, the Recirculating Seal Oil Pump, the Seal Oil Vacuum Pump, an oil separator, the Main Seal Oil Pump, the Emergency Seal Oil Pump, a seal oil-regulating valve, a seal oil filter, and hydrogen and air detraining components. During normal operation, the Main Seal Oil Pump takes suction from the Seal Oil Vacuum Tank and provides oil to the Main Generator shaft seals through the seal oil regulating valve and seal oil filter. Oil drained from both the air and hydrogen sides of the shaft seals is returned to the Seal Oil Vacuum Tank after gas is detrained in the hydrogen and air detraining tanks. Once in the Seal Oil Vacuum Tank, the seal oil is continuously recirculated through a spray header by the Recirculating Seal Oil Pump to further allow for the removal of noncondensibles and moisture through the Seal Oil Vacuum Pump and oil separator. An Emergency Seal Oil Pump is provided to deliver the sealing oil to the generator end seals in the event of a failure of the Main Seal Oil Pump.

Carbon dioxide provided by the Generator Gas & Vents System is used for purging out air or hydrogen, as required, to avoid having an explosive hydrogen-air mixture in the generator at any time, either when the generator is being filled with hydrogen prior to being placed in service, or when hydrogen is being removed from the generator prior to opening the generator for inspection or repairs. The Generator Gas & Vents System consists of a carbon dioxide gas storage unit, a vaporizor, and a purging control station that delivers the carbon dioxide gas to

the Main Generator.

For more detailed information, see UFSAR Section 10.2.

System Boundary

The License Renewal scoping boundary of the Main Generator and Auxiliary System encompasses that portion of the system that is located in proximity to equipment performing a safety-related function. This includes the Stator Cooling System and Generator Seal Oil System portions of the Main Generator and Auxiliary System located within the Turbine Building. Included in this boundary are pressure-retaining components relied upon to preserve the leakage boundary intended function of this system. For more information, refer to the License Renewal Boundary Drawing for identification of this boundary, shown in red. Portions of the Main Generator and Auxiliary System that include only electrical components such as the Main Generator and Main Generator Excitation System are not included in scope, as these portions of the Main Generator and Auxiliary System do not create the potential for spatial interaction. Portions of the Main Generator and Auxiliary System that are air or gas filled during operation such as the Generator Hydrogen Cooling System, Generator Gas & Vents System, and Isolated Phase Bus Duct Cooling System are not included in scope, as these portions of the Main Generator and Auxiliary System do not create the potential for spatial interaction.

Not included in the Main Generator and Auxiliary System License Renewal scoping boundary are the following systems, which are separately evaluated as License Renewal systems:

Closed Cycle Cooling Water System
Instrument and Control Air System
Main and Auxiliary Transformers
Steam Turbine and Auxiliary System

Reason for Scope Determination

The Main Generator and Auxiliary System is not in scope under 10 CFR 54.4(a)(1) because no portions of the system are safety-related and relied upon to remain functional during and following design basis events. It meets 10 CFR 54.4(a)(2) because failure of nonsafety-related portions of the system could prevent satisfactory accomplishment of function(s) identified for 10 CFR 54.4(a)(1). The system is not in scope under 10 CFR 54.4(a)(3) because it is not relied upon in safety analyses or plant evaluations to perform a function that demonstrates compliance with the Commission's regulations for Fire Protection (10 CFR 50.48), Environmental Qualification (10 CFR 50.49), Pressurized Thermal Shock (10 CFR 50.61), Anticipated Transient Without Scram (10 CFR 50.62), or Station Blackout (10 CFR 50.63).

System Intended Functions

1. Resist nonsafety-related SSC failure that could prevent satisfactory accomplishment of a safety-related function. The Main Generator and Auxiliary System contains nonsafety-related stator cooling water and generator seal oil lines in the Turbine Building which have the potential for spatial interactions (spray or leakage) with safety-related SSCs. 10 CFR 54.4(a)(2)

UFSAR References

8.2
10.2

License Renewal Boundary Drawings

LR-302-303
LR-302-304

Table 2.3.4-6 **Main Generator and Auxiliary Systems**
Components Subject to Aging Management Review

Component Type	Intended Functions
Bolting	Mechanical Closure
Filter Housing	Leakage Boundary
Generator Frame	Leakage Boundary
Liquid Detector	Leakage Boundary
Oil Separator	Leakage Boundary
Piping and fittings	Leakage Boundary
Pump Casing (Main, Emergency, Vacuum, and Recirculating Seal Oil Pumps)	Leakage Boundary
Sight Glasses	Leakage Boundary
Strainer Body	Leakage Boundary
Tanks (Air Detraining Tank)	Leakage Boundary
Tanks (Float Trap Tank)	Leakage Boundary
Tanks (Hydrogen Detraining Tank)	Leakage Boundary
Tanks (Seal Oil Vacuum Tank)	Leakage Boundary
Valve Body	Leakage Boundary

The aging management review results for these components are provided in:

Table 3.4.2-6 Main Generator and Auxiliary Systems
Summary of Aging Management Evaluation

2.3.4.7 Main Steam System

System Purpose

The Main Steam System is a safety-related, normally operating system designed to deliver energy, in the form of steam, from the primary side of the plant to secondary side systems. The Main Steam System is capable of delivering steam to support normal plant operation up to 100% of design capacity and to support the plant cool-down during both normal operating conditions and design basis events.

The purpose of the Main Steam System is to provide steam to the appropriate secondary system components based on the plant conditions. It accomplishes this by directing steam to the turbine generator and main feedwater pump turbines during normal plant operation. Additionally, it provides gland seal steam and steam for relief valve support post heating. The Main Steam System includes moisture separators that remove moisture from steam exiting the high-pressure portion of the main turbine generator. In abnormal conditions, steam can be directed to the emergency feedwater pump turbine, the main condenser via the turbine bypass valves, or to the atmospheric dump valves as required to support safe shutdown of the plant. During normal and abnormal operating conditions, due to its interfaces with the main condenser, the Main Steam System functions as part of the pressure boundary for main condenser vacuum. Main condenser vacuum boundary is required to mitigate the steam generator tube failure accident and the rod ejection accident.

The functions of the Main Steam System are 1) main steam delivery, 2) relief valve support heating, 3) steam dump and turbine bypass, and 4) moisture separation. Following is a description of each function:

Main Steam Delivery:

The purpose of the steam delivery portion of the Main Steam System is to deliver steam from the steam generators to the high-pressure section of the turbine generator. It also provides steam to the main feedwater pump turbines. During station blackout, loss of both main feedwater pumps, loss of four reactor coolant pumps, receipt of a high containment pressure signal, or low Once Through Steam Generator (OTSG) level, the Main Steam System provides steam to the emergency feedwater pump turbine.

The Main Steam System delivers steam through two 24-inch main steam lines originating from each OTSG, for a total of four steam lines to the high-pressure turbine. Prior to the Main Steam Isolation Valves (MSIV), each main steam line supplies steam to other portions of the Main Steam System for relief valve post support heating, the steam dump and bypass functions, and the emergency feedwater pump. Each main steam line has its own motor-operated MSIV. Between the branch lines and the MSIV are either four or five safety relief valves for a total of nine safety relief valves per steam generator.

Downstream of the MSIV's, pressure-driven dry and slightly superheated steam from the steam generators flows through four sets of main turbine stop and control valves into the high-pressure section of the main turbine.

The portion of the MS System up to and including the MSIV's will maintain its structural integrity during a seismic event. The portion of the MS System downstream of the MSIV's,

which supplies steam to the main turbine and the feedwater pump turbines and also gland steam, is not required for plant safe shutdown or for maintaining the plant in a safe shutdown condition.

Relief Valve Post Support Heating:

The purpose of the relief valve post support heating portion of the Main Steam System is to prevent damage to the relief valve discharge piping. It accomplishes this by providing steam through small branch lines for heating the thermally compensating relief valve post supports. Heating the support causes the gap between the support and the relief valve to remain small, minimizing the allowable movement of the discharge piping, thereby limiting the resulting stress on the relief valve header connections.

Steam Dump and Bypass:

The purpose of the steam dump and bypass portion of the Main Steam System is to provide a heat sink and pressure control, independent of the main steam safety relief valves, at low loads before the turbine is capable of accepting pressure control or after a turbine trip prior to the establishment of normal decay heat removal. It accomplishes this through six turbine bypass valves (TBV) and the two atmospheric steam dump valves (ADV) and their associated piping and components.

The portion of the turbine bypass system utilized for atmospheric steam dump is within the seismic boundary. Therefore, it will maintain structural integrity during a seismic event. The condenser dump portion is not required for reactor safety and is not seismically qualified.

Moisture Separation:

The purpose of the Main Steam System moisture separators is to remove a large percentage of the moisture in the steam resulting from the expansion process through the high-pressure turbine. Liquid from each moisture separator collects in a moisture separator drain tank. A moisture separator pump takes suction from each drain tank and discharges to the sixth stage feedwater heaters. A portion of the discharge from one moisture separator pump is fed to a demineralizer for chemistry control before being discharged to the main condensers.

System Operation

The Main Steam System begins at the exit nozzles on the shell side of the OTSG's. Here, steam enters the four 24-inch main steam lines and passes the safety relief valves. These valves open automatically when steam pressure reaches their setpoints. The setpoints vary such that the valves open in succession as necessary. The safety relief valves are capable of relieving more steam than can be produced. The relief capacity is designed such that energy generated at the reactor high power trip setpoint can be dissipated completely by these valves.

The MSIV's are located downstream of the safety relief valves. Each of these valves is a motor-operated check valve.

Main steam flows to the main feedwater pump turbines, to the gland seal portion of the Steam Turbine and Auxiliaries System, and to drains leading to the main condenser. Main steam can be supplied to the gland seal subsystem during both startup and power operations. This subsystem normally provides gland seal steam for the high-pressure turbine during startup.

During higher power operation, high-pressure turbine leak-off is used as gland seal steam and main steam is used as a backup supply. Gland seal steam is normally provided to both the turbine stop and control valves.

For more detailed information, see UFSAR Section 10.3.

System Boundary

The Main Steam System boundary begins in the Reactor Building at the OTSG main steam outlet nozzles, where the four 24-inch main steam lines attach. In these lines are the main steam safety relief valves followed by the MSIV's. Downsteam of the MSIV's, the main steam lines enter the Turbine Building and connect to the turbine stop and control valves for the high pressure section of the main turbine. This ends the main portion of the Main Steam System. The main turbine, which includes the high pressure rotor and three low pressure rotors, is part of the Steam Turbine and Auxiliaries System. The Main Steam System resumes downstream of the high pressure turbine with steam piping leading to the six moisture separators. Downstream of the moisture separators, Main Steam System piping interfaces again with the Steam Turbine and Auxiliaries System at each of the three low pressure turbines. Main Steam interfaces with the Extraction Steam System, which provides gland seal steam to the turbine-driven main feedwater pumps.

The Main Steam System includes vents from each steam generator that interface with the Feedwater System and Radwaste System. Main Steam branch piping interfaces with the Feedwater System at the feedwater pump turbines. The Main Steam System interfaces with the Emergency Feedwater System at the governor valve of the turbine-driven emergency feedwater pump. Moisture separator drain tanks connect to the main condensers, part of Condenser and Air Removal System, via the moisture separator demineralizer. The moisture separator pumps discharge to the sixth stage feedwater heaters, which are part of the Condensate System. Steam from the relief valve post-heating portion of the Main Steam System also drains to the Extraction Steam System. Downstream of the TBV's, Main Steam System branch piping interfaces with the main condenser. The Main Steam System connects to the Auxiliary Steam System at the emergency feedwater pump and at the moisture separators.

Also, included in the License Renewal Scoping Boundary of the Main Steam System are those portions of nonsafety-related piping and equipment that extend beyond the safety-related/nonsafety-related interface up to the location of the first seismic anchor, or to a point no longer in proximity to equipment performing a safety-related function, whichever extends furthest. This includes the nonsafety-related portions of the system located within the Reactor Building, the Intermediate Building, and the Turbine Building. Included in this boundary are pressure-retaining components relied upon to preserve the leakage boundary intended function of this portion of the system. For more information, refer to the License Renewal Boundary Drawing for identification of this boundary, which is shown in red.

Not included in the Main Steam System license renewal scoping are the following systems, which are separately evaluated as license renewal systems:

Auxiliary Steam System
Condenser & Air Removal System
Emergency Feedwater System
Extraction Steam System

Feedwater System
Radwaste System
Steam Generator
Steam Turbine and Auxiliary Systems

Reason for Scope Determination

The Main Steam System meets 10CFR54.4(a)(1) because it is a safety-related system that is relied upon to remain functional during and following design basis events. It meets 10CFR54.4(a)(2) because failure of nonsafety-related portions of the system could prevent satisfactory accomplishment of function(s) identified for 10CFR54.4(a)(1). It also meets 10CFR54.4(a)(3) because it is relied upon in the safety analyses or plant evaluations to perform a function that demonstrates compliance with the Commission's regulations for Fire Protection (10CFR50.48), Environmental Qualification (10CFR50.49), and Station Blackout (10CFR50.63). The Main Steam System is not relied upon in any safety analyses or plant evaluations to perform a function that demonstrates compliance with the Commission's regulation for Pressurized Thermal Shock (10 CFR 50.61) or Anticipated Transient Without Scram (10 CFR 50.62).

System Intended Functions

1. Provide secondary heat sink. Provide a heat sink via the ADV's and TBV's at low loads when the turbine is not capable of accepting pressure control or after a turbine trip. The MSIV's, safety relief valves, and heated valve post supports insure integrity of the system to enable this function. 10 CFR 54.4 (a)(1).
2. Remove residual heat from the Reactor Coolant System. The Main Steam System delivers steam to the Emergency Feedwater System when normal feedwater is not available. 10 CFR 54.4 (a)(1).
3. Provide primary containment boundary. The Main Steam System provides a long-term closure function for primary containment integrity for design basis accidents, including Large Break LOCA, Small Break LOCA, Main Steam Line Break, and Steam Generator Tube Rupture (However, MSIV closure time is not relied upon in any accident analysis.) 10 CFR 54.4 (a)(1).
4. Sense process conditions and generate signals for reactor trip or engineered safety features actuation. The Main Steam System includes instrumentation that detects, mitigates, and actuates automatic safety functions. (UFSAR 10.3.1) 10 CFR 54.4(a)(1).
5. Resist nonsafety-related SSC failure that could prevent satisfactory accomplishment of a safety-related function. Portions of the Main Steam System are included within the main condenser vacuum boundary, which is required to mitigate the steam generator tube failure accident and the rod ejection accident. The Main Steam System also contains nonsafety-related water or steam filled lines in the Reactor Building, Intermediate Building, and Turbine Building, which have potential for spatial interactions (spray or leakage) with safety-related SSC's. 10 CFR 54.4 (a)(2).
6. Relied upon in safety analyses or plant evaluations to perform a function that demonstrates compliance with the NRC's regulations for Fire Protection (10 CFR 50.48). 10 CFR 54.4 (a)(3).
7. Relied upon in safety analyses or plant evaluations to perform a function that demonstrates compliance with the NRC's regulations for Environmental Qualification (10 CFR 50.49). 10 CFR 54.4 (a)(3).
8. Relied upon in safety analyses or plant evaluations to perform a function that demonstrates compliance with the NRC's regulations for Station Blackout (10 CFR 50.63). 10 CFR 54.4 (a)(3).

UFSAR References

1.3.2.42
1.3.2.45
1.4.6
4.1.1
4.2.5.4
5.3
5.4.3.2
5.4.5
7.1.4
7.3
9.6
9.10.3
10.2
10.3
10.4
10.5
10.6
10.7
10.8

License Renewal Boundary Drawings

LR-302-011
LR-302-012
LR-302-032
LR-302-041
LR-303-052
LR-302-111
LR-302-113
LR-302-121
LR-302-141
LR-302-196
LR-302-719

Table 2.3.4-7 **Main Steam System**
Components Subject to Aging Management Review

Component Type	Intended Functions
Bolting	Mechanical Closure
Expansion Joints	Pressure Boundary
Flexible Connectors	Pressure Boundary
Flow Device	Pressure Boundary
Flow Element	Pressure Boundary
Heat exchanger components (Moisture Separator Cooler)	Leakage Boundary
Heat exchanger components (Moisture Separator Cooler)	Pressure Boundary
Heat exchanger components (Moisture Separator Pre-Cooler)	Leakage Boundary
Heat exchanger components (Moisture Separator Pre-Cooler)	Pressure Boundary
Piping and fittings	Leakage Boundary
Piping and fittings	Pressure Boundary
Pump Casing (Moisture Separator Drain Pumps)	Pressure Boundary
Resin Addition Unit	Leakage Boundary
Sight Glasses	Pressure Boundary
Steam Traps	Pressure Boundary
Strainer Body	Pressure Boundary
Tanks (Moisture Separator Demineralizer)	Pressure Boundary
Tanks (Moisture Separator Drain Tanks)	Pressure Boundary
Tanks (Moisture Separators)	Pressure Boundary
Thermowell	Pressure Boundary
Valve Body	Leakage Boundary
Valve Body	Pressure Boundary

The aging management review results for these components are provided in:

Table 3.4.2-7 Main Steam System
Summary of Aging Management Evaluation

2.3.4.8 Steam Turbine and Auxiliary Systems

System Purpose

The Steam Turbine and Auxiliary System is a normally operating system designed to convert the thermodynamic energy generated in the primary side of the plant into rotational mechanical energy to drive the main generator at the output of the plant.

The Steam Turbine and Auxiliary System consists of the following plant systems: Main Turbine, Electro-Hydraulic Control (EHC) System, Turbine Lift Oil and Lube Oil System, Turbine Oil Purification and Transfer System, Gland Seal System, Turbine Drains, and Main Turbine Exhaust Hood Spray. The Steam Turbine and Auxiliary System is in scope for License Renewal. The Steam Turbine and Auxiliary System has several interfaces with other systems that are not within the License Renewal boundary of the Steam Turbine and Auxiliary System.

The purpose of the Steam Turbine and Auxiliary System is to convert thermal energy into mechanical energy. The system accomplishes this by receiving thermal energy in the form of pressurized steam from the Once Through Steam Generators (OTSG), converting this thermal energy to mechanical energy through rotation of the turbine shaft. Exhaust steam is discharged into the main condenser, part of the Condenser and Air Removal System. The Main Turbine System is directly connected to the main electric generator, part of the Main Generator and Auxiliary System, which produces electrical energy for plant output.

Turbine control is effected through the operation of the EHC System.

The Turbine Lift Oil and Lube Oil System supplies oil to the main turbine thrust and journal bearings for heat removal and lubrication and maintains the quality of the oil.

The Gland Steam System provides low pressure steam for sealing main and feedwater pump turbine rotors and valve stems of the main turbine stop and control valves.

The Turbine Drain System provides moisture and water removal from steam lines to prevent water induction into the turbine.

The Main Turbine Exhaust Hood Spray System provides cooling water to exhaust hood areas to prevent distortion of the turbine casings and support structures.

During normal and abnormal operating conditions, the Steam Turbine and Auxiliary System functions as part of the pressure boundary for main condenser vacuum.

System Operation

Dry and slightly superheated steam from the steam generators flow through the four sets of main stop valves and control valves into the high-pressure section of the turbine. Exhaust steam from the high-pressure section passes through the combined intermediate valves and enters the three low-pressure sections. Exhaust steam from the low-pressure sections is discharged into the main condenser. Steam flow through the turbine rotates a shaft connected to the Main Generator.

EHC System provides control of the main turbine load, acceleration, and steam flow by

positioning of the steam valves (stop, control, and combined intermediate valves). During normal operation the EHC System provides high-pressure fluid to operate steam valves required for turbine operation. EHC fluid pressure is applied to the hydraulic actuators on each steam valve. The fluid pressure allows the steam valves to open on signals from the EHC System. During a trip, sudden relieving of the EHC fluid pressure will result in rapid closure of all steam valves to prevent turbine overspeed. In the event that EHC electronic protection circuits cannot maintain a turbine speed, a mechanical overspeed trip device will operate through mechanical linkages to relieve EHC fluid pressure and all steam valves will trip closed. This System includes pressure switches that provide signals for anticipatory trip of the reactor.

Accumulators in the discharge line of the EHC hydraulic pumps absorb surges in the line to provide a constant pressure. The system provides for the cooling and the purification of the EHC fluid.

The Turbine Lift Oil and Lube Oil System supplies oil for heat removal and lubrication. Normal operation begins with main shaft-driven oil pump, which supplies oil from the oil reservoir to the oil-driven booster pump turbine. Oil exhausted from this turbine flows through one of two oil coolers before arriving at the main turbine bearings. The oil is then returned to the oil reservoir. This System also includes a motor-driven suction pump, turning gear oil pump, a DC-powered emergency bearing oil pump and ten high pressure lift pumps, which are normally in standby condition. The Turbine Oil Purification and Transfer System (the Bowser purification unit) operates independently from the turbine lube oil equipment to maintain lubricating oil quality.

The Gland Steam System delivers sealing steam to main turbine and feedwater pump turbine rotors and to the main turbine stop and control valve stems during startup and normal plant operation. The Auxiliary Steam System, Main Steam System, or high-pressure turbine can serve as sources of gland steam. Exhausted gland steam flows to the gland steam condenser, which is cooled by the Condensate System. The gland steam exhausters take suction from the gland steam condenser. In normal conditions, only one of two gland steam exhausters is in operation.

Water is supplied to the Main Turbine Exhaust Hood Spray System from the Condensate System. A spray control valve senses hood temperatures to control the flow rate of water to the low pressure turbine exhaust hoods. Spray water not converted to steam falls to the condenser tube bundles below.

In general, drains associated with the main turbine and its stop and control valves are open during plant startup. Closure of drains begins after the main generator is on line. All drains are eventually closed during low power operation. All turbine drains discharge to the main condenser.

For more detailed information, see UFSAR Section 10.2.

System Boundary

The Main Turbine System begins at the main turbine stop valves. The high pressure turbine discharges to cross-around piping leading to the moisture separators, followed by the combined intermediate valves. Steam then flows to the low-pressure turbines, which discharge to the Condenser and Air Removal System. Steam is also supplied to the Extraction Steam System. The cross-around piping, moisture separators, and combined intermediate valves are

evaluated with the Main Steam System.

The EHC System begins at the EHC system fluid tank. From this tank, EHC hydraulic pumps provide EHC fluid to the control packs of the main turbine stop and control valves and the combined intermediate valves. Upon exiting the control packs, the EHC fluid passes through coolers, cooled by the Closed Cycle Cooling Water System.

The Turbine Lift Oil and Lube Oil System begins at the lube oil reservoir. It provides oil to the high and low pressure turbine rotors and the main generator and exciter. The main generator and exciter are part of the Main Generator and Auxiliary System.

The Main Steam and Auxiliary Steam Systems are sources of steam for the Gland Steam System. Gland steam is provided to the main turbine, feedwater pump turbines (part of Feedwater System), and Main Steam System valves. Steam can also be provided to the 12th stage header of the Extraction Steam System. The gland steam condenser is cooled by the Condensate System. The Turbine Drains System collects drainage from these components and discharges to the main and auxiliary condensers, part of the Condenser and Air Removal System.

The Condensate System provides the water for the main turbine exhaust hood sprays. Water from the sprays is directed into the exhaust steam exiting the low-pressure turbines and discharges to the main condenser.

Additionally, the License Renewal Boundary includes those portions of the Steam Turbine and Auxiliary System located in proximity to equipment performing a safety-related function. This includes the liquid and steam filled portions of the system located within the Turbine Building. Included in this boundary are pressure-retaining components relied upon to preserve the leakage boundary intended functions of this system. For more information, refer to the License Renewal Boundary Drawings for identification of these boundaries, shown in red.

Not included in the Steam Turbine and Auxiliary System License Renewal scoping are the following systems, which are separately evaluated as License Renewal systems:

Auxiliary Steam System
Closed Cycle Cooling Water System
Condensate System
Condensers & Air Removal System
Extraction Steam System
Feedwater System
Main Generator and Auxiliary System
Main Steam System

<u>Reason for Scope Determination</u>

The Steam Turbine and Auxiliary System meets 10 CFR 54.4(a)(1) because it is relied upon to remain functional during and following design basis events. It meets 10 CFR 54.4(a)(2) because portions of the system interfacing with the main and auxiliary condensers function as part of the pressure boundary for main condenser vacuum. The Steam Turbine and Auxiliary System also meets 10 CFR 54.4 (a)(2) because failure of nonsafety-related portions of the

system could prevent satisfactory accomplishment of function(s) identified for 10 CFR 54.4(a)(1). It also meets 10 CFR 54.4(a)(3) because it is relied upon in the safety analyses or plant evaluations to perform a function that demonstrates compliance with the Commission's regulations for Anticipated Transient Without Scram (10 CFR 50.62). The Steam Turbine and Auxiliary System is not relied upon in any safety analyses or plant evaluations to perform a function that demonstrates compliance with the Commission's regulation for Fire Protection (10 CFR 50.48), Environmental Qualification (10CFR50.49), Station Blackout (10 CFR 50.63), or Pressurized Thermal Shock (10 CFR 50.61).

System Intended Functions

1) Provide secondary heat sink. The EHC portion of the Steam Turbine and Auxiliary System closes the main stop and control valves to maintain secondary side pressure and inventory after a main steam line rupture downsteam of the main steam isolation valves. 10 CFR 54.4 (a)(1).
2) Senses process conditions and generates signals for reactor trip or engineered safety features actuation. The EHC portion of the Steam Turbine and Auxiliary System includes instrumentation that provides signals for anticipatory trip of the reactor. 10 CFR 54.4 (a)(1).
3) Resist nonsafety-related SSC failure that could prevent satisfactory accomplishment of a safety-related function. The Steam Turbine and Auxiliary System maintains pressure boundary for main condenser vacuum during abnormal operating conditions to support gas-to-liquid iodine partitioning in the main condenser. The Steam Turbine and Auxiliary System also contains nonsafety-related water-filled lines in the Turbine Building, which have potential for spatial interactions (spray or leakage) with safety-related SSC's. 10 CFR 54.4 (a)(2).
4) Relied upon in safety analyses or plant evaluations to perform a function that demonstrates compliance with the NRC's regulations for Anticipated Transients without Scram (10 CFR 50.62). The Steam Turbine and Auxiliary System functions to trip the main turbine via the EHC System on ATWS transients to prevent RCS overpressurization, to maintain fuel integrity, and to meet radiation release requirements. 10 CFR 54.4 (a)(3).

UFSAR References

7.1.2
10.2.1
10.2.2
10.2.3
Table 10.2-1
Table 10.2-2
14.1.2.9
14.1.2.10
14.2.2.2

License Renewal Boundary Drawings

LR-302-011
LR-302-041
LR-302-042
LR-302-043
LR-302-121
LR-302-141
LR-302-291
LR-302-302 Sh 1

LR-302-302 Sh 2
LR-302-305
LR-302-306
LR-302-307
LR-302-308

Table 2.3.4-8 Steam Turbine and Auxiliary Systems
Components Subject to Aging Management Review

Component Type	Intended Functions
Bolting	Mechanical Closure
Equipment Enclosure (Oil Tight Compartments, Main Turbine Enclosures, Front Standard, & Drip Pans)	Leakage Boundary
Fan Housing	Leakage Boundary
Filter Housing	Leakage Boundary
Flow Device	Leakage Boundary
Flow Element	Leakage Boundary
Heat exchanger components (EHC Fluid Coolers - Shell-Side)	Leakage Boundary
Heat exchanger components (Gland Steam Condenser)	Evaluated with Condensate System
Heat exchanger components (Lube Oil Coolers - Shell Side)	Leakage Boundary
Piping and fittings	Leakage Boundary
Piping and fittings	Pressure Boundary
Pump Casing (EHC Hydraulic Pumps, Transfer & Filtering Pumps)	Leakage Boundary
Pump Casing (Turbine Oil Transfer Pump, Main Turbine and Feed Pump Turbine Oil Filter Pumps)	Leakage Boundary
Sight Glasses	Leakage Boundary
Steam Traps	Pressure Boundary
Strainer Body	Leakage Boundary
Strainer Body	Pressure Boundary
Tanks (EHC Fluid Tank, EHC Main Accumulators, EHC Recirculating Tank)	Leakage Boundary
Tanks (Turbine Bearing Drip Pan Collection Tanks, Feed Pump Turbine A & B Oil Reservoirs, Main Turbine Oil Reservoir, Lube Oil Seal Drain Tanks, Main Turbine Oil Conditioner, Feed Pump Turbine Oil Conditioner)	Leakage Boundary
Thermowell	Leakage Boundary
Thermowell	Pressure Boundary
Turbine Casing	Pressure Boundary
Valve Body	Leakage Boundary
Valve Body	Pressure Boundary
Water Traps	Leakage Boundary

The aging management review results for these components are provided in:

Table 3.4.2-8 Steam Turbine and Auxiliary Systems
Summary of Aging Management Evaluation

2.4 SCOPING AND SCREENING RESULTS: STRUCTURES

The following structural components are addressed in this section:

- Air Intake Structure (Section 2.4.1)
- Auxiliary Building (Section 2.4.2)
- Circulating Water Pump House (Section 2.4.3)
- Control Building (Section 2.4.4)
- Diesel Generator Building (Section 2.4.5)
- Dike/Flood Control System (Section 2.4.6)
- Fuel Handling Building (Section 2.4.7)
- Intake Screen and Pump House (Section 2.4.8)
- Intermediate Building (Section 2.4.9)
- Mechanical Draft Cooling Tower Structures (Section 2.4.10)
- Miscellaneous Yard Structures (Section 2.4.11)
- Natural Draft Cooling Tower (Section 2.4.12)
- Structural Commodities (Section 2.4.13)
- Reactor Building (Section 2.4.14)
- SBO Diesel Generator Building (Section 2.4.15)
- Service Building (Section 2.4.16)
- Component Supports Commodity Group (Section 2.4.17)
- Substation Structures (Section 2.4.18)
- Turbine Building (Section 2.4.19)
- UPS Diesel Building (Section 2.4.20)

2.4.1 Air Intake Structure

System Purpose

The Air Intake Structure is a reinforced concrete structure located approximately 300 feet southwest of the Reactor Building. The Air Intake Structure evaluation boundary includes the above grade reinforced concrete box like structure that extends approximately 24 feet above grade to the high point on the sloped reinforced concrete roof and a below grade tunnel that provides a pathway for outside air from the air intake to the Auxiliary Building, Control Building and Fuel Handling Building. The air intake structure and tunnel have a reinforced concrete foundation mat founded on bedrock. The Air Intake Structure is a Class I structure.

The upper half of the air intake structure has large openings on all four sides with louvers and screens that allow air to enter the structure and to inhibit the intake of small mass debris. The floor slabs for the below grade portions of the structure extend to varying depths of approximately 20 feet, 32 feet and 36 feet below grade. The reinforced concrete tunnel is noncombustible and the 3 foot thick tunnel roof is covered with approximately 8 feet of compacted backfill.

Both portions of the structure are designed to withstand the effects of design basis accident loads, which include the effects of flooding and earthquake. The below grade portion of this structure is also designed to withstand the effects of hypothetical aircraft incident.

The purpose of the structure is to provide a source of makeup air or outside air to the ventilation systems of the Auxiliary, Control, and Fuel Handling Buildings and to provide structural support, shelter and protection for the components housed within. The entire structure is in scope for License Renewal.

Components and associated intended functions included in the evaluation boundary of the Air Intake Structure, which are in scope for License Renewal, are identified in the following table.

Components not included in the Air Intake Structure License Renewal evaluation boundary are component supports, structural commodities and fire barriers. Component supports are identified and separately evaluated in the Component Supports Commodity Group section. Structural commodities including structural bolting, penetration sleeves including end caps, penetration seals, concrete anchors, concrete embedments, tube track, bus ducts, conduit, cable trays, cabinets, enclosures, racks, frames and panels for electrical equipment and instrumentation are identified and evaluated in the Structural Commodities section. Fire barriers are evaluated with the License Renewal Fire Protection system.

For more detailed information see UFSAR Sections 1.2.7.3, 2.6.4.2, 2.6.5, 2.7.4, 2.7.5, 5.1.1, 5.1.3, 5.4, 9.8 and 9.9.

Reason for Scope Determination

The Air Intake Structure meets 10 CFR 54.4(a)(1) because it is a safety-related structure that is relied upon to remain functional during and following design basis events. It meets 10 CFR 54.4(a)(2) because the structure provides physical support, shelter and protection for nonsafety-related systems, structures and components whose failure could prevent satisfactory accomplishment of function(s) identified for 10 CFR 54.4(a)(1). The Air Intake Structure also

meets 10 CFR 54.4(a)(3) because it provides physical support, shelter and protection for systems, structures and components (SSCs) relied upon in the safety analyses or plant evaluations to perform a function that demonstrates compliance with the Commission's regulations for Fire Protection (10 CFR 50.48). The Air Intake Structure is not relied upon in the safety analyses or plant evaluations to perform a function that demonstrates compliance with the Commission's regulation for Environmental Qualification (10 CFR 50.49), Pressurized Thermal Shock (10 CFR 50.61), Anticipated Transient Without Scram (10 CFR 50.62), or Station Blackout (10 CFR 50.63).

System Intended Functions

1. Provides physical support, shelter and protection for safety-related systems, structures, and components (SSCs). 10 CFR 54.4(a)(1)
2. Provides physical support, shelter and protection for nonsafety related systems, structures, and components whose failure could prevent satisfactory accomplishment of function(s) identified for 10 CFR 54.4(a)(1). 10 CFR 54.4(a)(2)
3. Provides physical support, shelter and protection for systems, structures, and components relied upon in safety analyses or plant evaluations to perform a function that demonstrates compliance with the commission's regulations for Fire Protection (10 CFR 50.48). 10 CFR 54.4(a)(3)

UFSAR References

1.2.7.3
2.6.4.2
2.6.5
2.7.4
2.7.5
5.1.1
5.1.3
5.4
9.8
9.9

License Renewal Boundary Drawings

LR-1E-120-01-001

Table 2.4-1 **Air Intake Structure**
Components Subject to Aging Management Review

Component Type	Intended Functions
Concrete: Above-grade exterior	Flood Barrier
Concrete: Above-grade exterior	Shelter, Protection
Concrete: Above-grade exterior	Structural Support
Concrete: Below-grade exterior	Flood Barrier
Concrete: Below-grade exterior	Missile Barrier
Concrete: Below-grade exterior	Shelter, Protection
Concrete: Below-grade exterior	Structural Support
Concrete: Foundation	Flood Barrier
Concrete: Foundation	Structural Support
Concrete: Interior	Flood Barrier
Concrete: Interior	Missile Barrier
Concrete: Interior	Pressure Boundary
Concrete: Interior	Shelter, Protection
Concrete: Interior	Structural Support
Doors	Pressure Boundary
Metal components: All structural members	Flood Barrier
Metal components: All structural members	Shelter, Protection
Miscellaneous steel (catwalks, stairs, handrails, ladders, vents and louvers, platforms, etc.)	Structural Support
Seals, gaskets, and moisture barriers (caulking, flashing and other sealants)	Flood Barrier
Seals, gaskets, and moisture barriers (caulking, flashing and other sealants)	Structural Support
Steel components: All structural steel	Structural Support

The aging management review results for these components are provided in:

Table 3.5.2-1 Air Intake Structure
Summary of Aging Management Evaluation

2.4.2 Auxiliary Building

System Purpose

The evaluation boundary for the Auxiliary Building includes the Auxiliary Building, Heat Exchanger Vault, Access Tunnel Vault, and Exhaust Air Tunnel which are classified as Seismic Class I. The evaluation boundary also includes the nonsafety-related Chem Storage Room and ESF Ventilation Room located on the Auxiliary Building roof.

The Auxiliary Building is located south west of the Reactor Building and west of the Fuel Handling Building. The Auxiliary Building is a reinforced concrete structure having one story above grade, with the top of floor slab at elevation 305'-0". There are portions of the building that are two stories below grade with a top of base slab at elevation 261'-0". The remaining portion of the building is one story below grade with varying top of base slab elevations of 275'-0" and 281'-0". The foundation for the Auxiliary Building is a reinforced concrete mat founded on bedrock.

The Heat Exchanger Vault is a reinforced concrete structure attached to the west wall of the Auxiliary Building. The Heat Exchanger Vault is a single story structure mostly below grade and founded on bedrock with the top of base slab at elevation 271'-0". The top of roof slab is at elevation 305'-0", which is slightly above the grade elevation 304'-0" at this location.

The Access Tunnel Vault is a reinforced concrete structure attached to the north wall of the Auxiliary Building. The Access Tunnel Vault foundation is a reinforced concrete mat founded on bedrock. This structure is below grade with a top of base slab at elevation 281'-0" and serves as a pipe tunnel for piping between the heat exchangers located in the Heat Exchanger Vault and pumps located within the Auxiliary Building.

The Exhaust Air Tunnel is a reinforced concrete structure attached to the north wall of the Auxiliary Building. A major portion of the Exhaust Air Tunnel is located above the Access Tunnel Vault in the east to west direction, with a top of base slab elevation of 295'-0" and a top of roof elevation of 310'-0". A portion of the Exhaust Air tunnel makes a slight turn north towards the Reactor Building for approximately 25 feet where the base slab slopes up to elevation 299'-0" and the top of roof elevation remains at 310'-0". A section of the tunnel along the 25 foot section has been cast on top of the borated water tank tunnel and the east end of the Exhaust Air Tunnel is supported on the exterior wall of the tendon access gallery.

The Chem Storage and ESF Ventilation Rooms are separate nonsafety-related steel framed structures with metal siding and metal roof protected with roofing material located on the Auxiliary Building reinforced concrete roof slab at elevation 331'-0".

The Auxiliary Building, Heat Exchanger Vault, Access Tunnel Vault and Exhaust Air Tunnel are designed for normal operating loads and to withstand the effects of design basis accident loads as applicable, which include the effects of tornado loads including tornado missiles, flooding, earthquake, aircraft impact and equipment generated missiles. The Chem Storage Room and ESF Ventilation Room are designed for normal operating loads only. Each structure discussed above is in the scope of License Renewal in their entirety.

The purpose of the Auxiliary Building, Access Tunnel Vault, and Heat Exchanger Vault is to

provide structural support, shelter and protection for vital mechanical and electrical equipment required for safe operation of the plant, including safe shutdown of the reactor. These structures also house safety-related piping, electrical and mechanical equipment and components such as the reactor coolant bleed tanks, electrical inverters, electrical switchgear, miscellaneous electrical equipment and components and their enclosures, instrumentation and their enclosures as applicable, and Auxiliary Building and Fuel Handling Building HVAC.

The purpose of the Exhaust Air Tunnel portion of the Auxiliary Building is to allow exhaust air from the Auxiliary Building, Reactor Building, Fuel Handling Building and Control Building ventilation systems to be directed to the exhaust vent stack located on the west side of the Reactor Building.

The purpose of the Chem Storage and ESF Ventilation Rooms on the Auxiliary Building roof is to provide structural support, shelter and protection for nonsafety-related equipment housed within and to maintain their structural integrity to ensure that they will not adversely affect the components housed within or the Auxiliary Building from performing their intended functions.

Components and associated intended functions included in the evaluation boundary of the Auxiliary Building which are in the scope for License Renewal, are identified in the following table.

Components not included in the evaluation boundary of the Auxiliary Building are component supports, structural commodities, miscellaneous cranes and hoists and fire barriers. Component Supports are identified and separately evaluated in the Component Supports Commodity Group section. Structural commodities including structural bolting, piping insulation, component insulation, penetration sleeves including end caps, penetration seals, concrete anchors, concrete embedments, tube track, bus ducts, conduit, cable trays, cabinets, enclosures, racks, frames and panels for electrical equipment and instrumentation are identified and separately evaluated in the Structural Commodities section. The cranes and hoists are evaluated separately with Cranes and Hoists System and the fire barriers are evaluated with the Fire Protection System.

For more detailed information see UFSAR Sections 1.2.7.3, 1.3.2.7, 1.3.2.28, 1.3.2.41, 2.6.5, 2.7.4, 2.7.5, 5.1.1, 5.1.3, 5.4, 9.8, Appendix 11A: 11.A.6 and 11.A.8.

Reason for Scope Determination

The safety-related structures included within the Auxiliary Building evaluation boundary meet 10 CFR 54.4(a)(1) because they are relied upon to remain functional during and following design basis events.

The structures included within the Auxiliary Building evaluation boundary meet 10 CFR 54.4(a)(2) because they provide physical support, shelter and protection for nonsafety-related systems, structures and components whose failure could prevent satisfactory accomplishment of function(s) identified for 10 CFR 54.4(a)(1) and also because failure of nonsafety-related portions could prevent satisfactory accomplishment of function(s) identified for 10 CFR 54.4(a)(1).

The structures included within the Auxiliary Building evaluation boundary meet 10 CFR 54.4(a)(3) because they provide physical support, shelter and protection for systems,

structures and components (SSCs) relied upon in the safety analyses or plant evaluations to perform a function that demonstrates compliance with the Commission's regulations for Fire Protection (10 CFR 50.48), Environmental Qualification (10 CFR 50.49), Anticipated Transient Without Scram (10 CFR 50.62), and Station Blackout (10 CFR 50.63).

They are not relied upon in the safety analyses or plant evaluations to perform a function that demonstrates compliance with the Commission's regulation for Pressurized Thermal Shock (10 CFR 50.61).

System Intended Functions

1. Provides physical support, shelter and protection for safety-related systems, structures, and components. 10 CFR 54.4(a)(1)
2. Provides radiation shielding protection for personnel and equipment/components. 10 CFR 54.4(a)(1)
3. Provides physical support, shelter and protection for nonsafety-related systems, structures, and components whose failure could prevent satisfactory accomplishment of function(s) identified for 10 CFR 54.4 (a)(1). 10 CFR 54.4(a)(2)
4. Provides physical support, shelter and protection for systems, structures, and components relied upon in safety analyses or plant evaluations to perform a function that demonstrates compliance with the Commission's regulations for Fire Protection (10 CFR 50.48). 10 CFR 54.4(a)(3)
5. Provides physical support, shelter and protection for systems, structures, and components relied upon in safety analyses or plant evaluations to perform a function that demonstrates compliance with the Commission's regulations for Environmental Qualification (10 CFR 50.49). 10 CFR 54.4(a)(3)
6. Provides physical support, shelter and protection for systems, structures, and components relied upon in safety analyses or plant evaluations to perform a function that demonstrates compliance with the Commission's regulations for Anticipated Transient without Scram (10 CFR 50.62). 10 CFR 54.4(a)(3)
7. Provides physical support, shelter and protection for systems, structures, and components relied upon in safety analyses or plant evaluations to perform a function that demonstrates compliance with the Commission's regulations for Station Blackout (10 CFR 50.63). 10 CFR 54.4(a)(3)

UFSAR References

1.2.7.3
1.3.2.7
1.3.2.28
1.3.2.41
2.6.5
2.7.4
2.7.5
5.1.1
5.1.3
5.4
9.8
Appendix 11.A.6

Appendix 11.A.8

License Renewal Boundary Drawings

LR-1E-120-01-001

Table 2.4-2 **Auxiliary Building**
Components Subject to Aging Management Review

Component Type	Intended Functions
Bulkhead	Flood Barrier
Concrete: Above-grade exterior	Flood Barrier
Concrete: Above-grade exterior	Missile Barrier
Concrete: Above-grade exterior	Pressure Boundary
Concrete: Above-grade exterior	Shelter, Protection
Concrete: Above-grade exterior	Shielding
Concrete: Above-grade exterior	Structural Support
Concrete: Below-grade exterior	Flood Barrier
Concrete: Below-grade exterior	Missile Barrier
Concrete: Below-grade exterior	Pressure Boundary
Concrete: Below-grade exterior	Shelter, Protection
Concrete: Below-grade exterior	Shielding
Concrete: Below-grade exterior	Structural Support
Concrete: Foundation	Flood Barrier
Concrete: Foundation	Structural Support
Concrete: Interior	Flood Barrier
Concrete: Interior	Missile Barrier
Concrete: Interior	Pressure Boundary
Concrete: Interior	Shelter, Protection
Concrete: Interior	Shielding
Concrete: Interior	Structural Support
Doors	Shelter, Protection
Equipment foundations	Structural Support
Hatches/Plugs	Shielding
Hatches/Plugs	Structural Support
Masonry walls	Shielding
Masonry walls	Structural Support
Miscellaneous steel (catwalks, stairs, handrails, ladders, vents and louvers, platforms, etc.)	Structural Support
Roofing	Shelter, Protection
Seals, gaskets, and moisture barriers (caulking, flashing and other sealants) (includes inflatable seals)	Flood Barrier
Seals, gaskets, and moisture barriers (caulking, flashing and other sealants) (includes inflatable seals)	Shelter, Protection
Steel components: All structural steel	Structural Support

The aging management review results for these components are provided in:

Table 3.5.2-2 Auxiliary Building
Summary of Aging Management Evaluation

2.4.3 Circulating Water Pump House

System Purpose

The evaluation boundary for the Circulating Water Pump House includes the Circulating Water Pump House, the circulating water flume canal and intake tunnel. The Circulating Water Pump House is located west of and between the Unit 1 Cooling Towers approximately 700 feet northeast of the Unit 1 Reactor Building. The above structures included with the evaluation boundary are Class III structures founded on compacted backfill.

The Circulating Water Pump House consists of a below grade reinforced portion with an above grade steel superstructure enclosed with insulated aluminum siding. The roof of the Circulating Water Pump House is protected with roofing material. The building contains six circulating water pumps located above the foundation slab at elevation 282'-10", arranged so that three pumps discharge through each of the two 102 inch diameter pipes. A 48-inch cross-connection permits the discharge of one pump to pass to the other pipe.

The circulating water flume canal and tunnel are reinforced concrete structures that are used to convey water from the cooling tower basins to the Circulating Water Pump House.

The entire structure is in the scope of License Renewal.

The purpose of the Circulating Water Pump House is to provide structural support, and shelter and protection for the Circulating Water Pumps. These pumps are required to provide the necessary cooling water to the Turbine Condenser to maintain condenser vacuum. Condenser vacuum is credited for the steam generator tube failure accident and the rod ejection accident as described in Chapter 14 of the UFSAR. Additionally, the diesel driven circulating water flume fire pump required for 10 CFR 50.48 is located within the Circulating Water Pump House, and draws suction from the circulating water flume canal. The Pump House provides structural support, and shelter and protection for this diesel fire pump.

Components and associated intended functions included in the evaluation boundary of the Circulating Water Pump House, which are in scope for License Renewal, are identified in the table below.

Components not included in the evaluation boundary of the Circulating Water Pump House are component supports, structural commodities, miscellaneous cranes and hoists and fire barriers. Component Supports are identified and separately evaluated in the Component Supports Commodity Group section. Structural commodities including structural bolting, piping insulation, component insulation, penetration sleeves including end caps, penetration seals, concrete anchors, concrete embedments, tube track, bus ducts, conduit, cable trays, cabinets, enclosures, racks, frames and panels for electrical equipment and instrumentation are identified and evaluated in the Structural Commodities section. The cranes and hoists are identified and evaluated with Cranes and Hoists System and the fire barriers are evaluated with the Fire Protection System.

For more detailed information see UFSAR Sections 5.1.1.3, 9.6.2, 9.9, 10.1, 14.1.2.10, and 14.2.2.2.

Reason for Scope Determination

The Circulating Water Pump House is not in scope under 10 CFR 54.4(a)(1) because no portion of the structure is safety-related and relied on to remain functional during and following design basis events. The Circulating Water Pump House is in scope under 10 CFR 54.4(a)(2) because failure of non-safety-related portions of the structure would prevent satisfactory accomplishment of function(s) identified for 10 CFR 54.4(a)(1). The Circulating Water Pump House meets 10 CFR 54.4(a)(3) because it provides physical support, shelter and protection for systems, structures, and components (SSCs) relied upon in the safety analyses and plant evaluations to perform a function that demonstrates compliance with the Commission's regulations for Fire Protection (10 CFR 50.48). The Circulation Water Pump House is not relied upon in any safety analyses or plant evaluations to perform a function that demonstrates compliance with the Commission's regulation for Environmental Qualification (10 CFR 50.49), Pressurized Thermal Shock (10 CFR 50.61), Anticipated Transient Without Scram (10 CFR 50.62) and Station Blackout (10 CFR 50.63).

System Intended Functions

1. Provides physical support, shelter and protection for nonsafety-related systems, structures, and components (SSCs) whose failure could prevent satisfactory accomplishment of function(s) identified for 10 CFR 54.4 (a)(1). 10 CFR 54.4(a)(2)
2. Provides physical support, shelter and protection for systems, structures, and components relied upon in safety analyses or plant evaluations to perform a function that demonstrates compliance with the commission's regulations for Fire Protection (10 CFR 50.48). 10 CFR 54.4(a)(3)

UFSAR References

5.1.1.3
9.6.2
9.9
10.1
14.1.2.10
14.2.2.2

License Renewal Boundary Drawings

LR-1E-120-01-001

Table 2.4-3 **Circulating Water Pump House**
Components Subject to Aging Management Review

Component Type	Intended Functions
Concrete: Above-grade exterior	Shelter, Protection
Concrete: Above-grade exterior	Structural Support
Concrete: Below-grade exterior	Shelter, Protection
Concrete: Below-grade exterior	Structural Support
Concrete: Foundation	Structural Support
Concrete: Interior	Direct Flow
Concrete: Interior	Shelter, Protection
Concrete: Interior	Structural Support
Doors	Shelter, Protection
Equipment foundations	Structural Support
Hatches/Plugs	Shelter, Protection
Hatches/Plugs	Structural Support
Metal components: All structural members	Structural Support
Metal siding	Shelter, Protection
Roofing	Shelter, Protection
Seals, gaskets, and moisture barriers (caulking, flashing and other sealants)	Shelter, Protection
Steel components: All structural steel	Structural Support

The aging management review results for these components are provided in:

Table 3.5.2-3 Circulating Water Pump House
Summary of Aging Management Evaluation

2.4.4 Control Building

System Purpose

The Control Building, a Seismic Class 1 structure, is a multi-story reinforced concrete structure located south east of the Reactor Building, east of the Fuel Handling Building and west of the Turbine Building. The building foundation consists of continuous reinforced concrete footings under the walls and square footings under the columns. All footings are founded on bedrock. The basement area of the building, located at elevation 285.0' is located below plant grade. The floors of the building are reinforced concrete slabs or reinforced concrete on metal decking supported by structural steel beams. The roof of the structure is a reinforced concrete slab, which is protected with roofing material. The building is designed to withstand the effects of normal operating loads and design basis accident loads, which include the effects of tornado loads including tornado missiles, flooding, earthquake, aircraft impact and equipment generated missiles. The entire structure is in the scope of License Renewal.

The purpose of the building is to provide structural support, shelter and protection for vital mechanical and electrical equipment required for safe operation of the plant, including safe shutdown of the reactor. The building provides structural support and shelter and protection for the Control Room, which is the main operation center for the plant. Habitability of the Control Room during an abnormal condition is been provided for in the design to ensure that Control Room operators can remain in the Control Room and take actions to operate and maintain the plant in a safe condition under accident conditions required by GDC 19 of 10 CFR 50, Appendix A, and NUREG 0737, Item III.D.3.4. The building also houses safety-related electrical and mechanical equipment and components such as the cable spreading room, essential DC batteries, electrical inverters, electrical switchgear, miscellaneous electrical equipment and components and their enclosures, instrumentation and their enclosures as applicable, and Control Room and Control Building HVAC. The Control Building also provides shielding from post accident radiation exposure to allow personnel access for operating and maintaining equipment.

Components and associated intended functions included in the evaluation boundary of the Control Building, which are in scope for License Renewal, are identified in the following table.

Components not included in the evaluation boundary of the building are component supports, structural commodities, miscellaneous cranes and hoists, building elevator and fire barriers. Component Supports are identified and separately evaluated in the Component Supports Commodity Group section. Structural commodities including structural bolting, piping insulation, component insulation, penetration sleeves including end caps, penetration seals, concrete anchors, concrete embedments, tube track, bus ducts, conduit, cable trays, cabinets, enclosures, racks, frames and panels for electrical equipment and instrumentation are identified and evaluated in the Structural Commodities section. The miscellaneous cranes and hoists are identified and evaluated with the Cranes and Hoists System, the building elevator is evaluated with the Elevators System and the fire barriers are identified and evaluated with the Fire Protection System.

For more detailed information see UFSAR Sections 1.4.11, 2.6.5, 2.7.4, 2.7.5, 5.1, 5.4, Appendix 5A; 4.4, Section 7.4.5, Appendix 11A; 11.A.6, and Appendix 14A; 4.1.

Reason for Scope Determination

The Control Building meets 10 CFR 54.4(a)(1) because it is a safety-related structure that is relied upon to remain functional during and following design basis events. It meets 10 CFR 54.4(a)(2) because the structure provides physical support, shelter and protection for nonsafety-related systems, structures and components whose failure could prevent satisfactory accomplishment of function(s) identified for 10 CFR 54.4(a)(1). The Control Building also meets 10 CFR 54.4(a)(3) because it provides physical support, shelter and protection for systems, structures and components (SSCs) relied upon in the safety analyses or plant evaluations to perform a function that demonstrates compliance with the Commission's regulations for Fire Protection (10 CFR 50.48), Anticipated Transient Without Scram (10 CFR 50.62), and Station Blackout (10 CFR 50.63). The Control Building is not relied upon in any safety analyses or plant evaluations to perform a function that demonstrates compliance with the Commission's regulations for Environmental Qualification (10 CFR 50.49) or Pressurized Thermal Shock (10 CFR 50.61).

System Intended Functions

1. Provides physical support, shelter and protection for safety-related systems, structures, and components (SSCs). 10 CFR 54.4(a)(1)
2. Provides radiation shielding protection for personnel and equipment/components. 10 CFR 54.4(a)(1)
3. Provides centralized areas for the control and monitoring of nuclear safety-related equipment. 10 CFR 54.4(a)(1)
4. Provides pressure boundary protection for design basis accidents and events. 10 CFR 54.4(a)(1)
5. Provides physical support, shelter and protection for nonsafety-related systems, structures, and components (SSCs) whose failure could prevent satisfactory accomplishment of function(s) identified for 10 CFR 54.4 (a)(1). 10 CFR 54.4(a)(2)
6. Provides physical support, shelter and protection for systems, structures, and components (SSCs) relied upon in safety analyses or plant evaluations to perform a function that demonstrates compliance with the Commission's regulations for Fire Protection (10 CFR 50.48). 10 CFR 54.4(a)(3)
7. Provides physical support, shelter and protection for systems, structures, and components (SSCs) relied upon in safety analyses or plant evaluations to perform a function that demonstrates compliance with the Commission's regulations for Anticipated Transient without Scram (10 CFR 50.62). 10 CFR 54.4(a)(3)
8. Provides physical support, shelter and protection for systems, structures, and components (SSCs) relied upon in safety analyses or plant evaluations to perform a function that demonstrates compliance with the Commission's regulations for Station Blackout (10 CFR 50.63). 10 CFR 54.4(a)(3)

UFSAR References

1.4.11
2.6.5
2.7.4
2.7.5
5.1

5.4
Appendix 5A, 4.4
7.4.5
Appendix 11A; 11.A.6
Appendix 14A, 4.1

License Renewal Boundary Drawings

LR-1E-120-01-001

Table 2.4-4 **Control Building**
Components Subject to Aging Management Review

Component Type	Intended Functions
Concrete: Above-grade exterior	Flood Barrier
Concrete: Above-grade exterior	Missile Barrier
Concrete: Above-grade exterior	Pressure Boundary
Concrete: Above-grade exterior	Shelter, Protection
Concrete: Above-grade exterior	Shielding
Concrete: Above-grade exterior	Structural Support
Concrete: Below-grade exterior	Flood Barrier
Concrete: Below-grade exterior	Missile Barrier
Concrete: Below-grade exterior	Pressure Boundary
Concrete: Below-grade exterior	Shelter, Protection
Concrete: Below-grade exterior	Shielding
Concrete: Below-grade exterior	Structural Support
Concrete: Foundation	Flood Barrier
Concrete: Foundation	Structural Support
Concrete: Interior	Flood Barrier
Concrete: Interior	Missile Barrier
Concrete: Interior	Pressure Boundary
Concrete: Interior	Shelter, Protection
Concrete: Interior	Shielding
Concrete: Interior	Structural Support
Doors	Pressure Boundary
Equipment foundations	Structural Support
Masonry walls	Structural Support
Metal components: All structural members	Flood Barrier
Metal decking	Structural Support
Miscellaneous steel (catwalks, stairs, handrails, ladders, vents and louvers, platforms, etc.)	Structural Support
Roofing	Shelter, Protection
Seals, gaskets, and moisture barriers (caulking, flashing and other sealants)	Pressure Boundary
Seals, gaskets, and moisture barriers (caulking, flashing and other sealants)	Shelter, Protection
Steel components: All structural steel	Shelter, Protection
Steel components: All structural steel	Structural Support

The aging management review results for these components are provided in:

Table 3.5.2-4	Control Building Summary of Aging Management Evaluation

2.4.5 Diesel Generator Building

System Purpose

The Diesel Generator Building is a single story above grade reinforced concrete structure. The building is located adjacent to the north wall of the Intermediate Building is west Service Building. The building foundation is a reinforced concrete mat founded on compacted backfill (i.e., grade). Reinforced concrete walls extend approximately 30 feet above grade to the high point on the reinforced concrete roof slab and a concrete roof parapet extends around portions of the roof. The roof slab is protected with roofing material. The building is classified safety-related, Seismic Class I and is designed to withstand the effects of normal operating loads and design basis accident loads which include tornado loads, tornado missiles, flooding, earthquake and equipment generated missiles.

The building houses the safety-related Emergency Diesel Generators, the diesel fuel oil day tanks, electrical and mechanical equipment associated with operation of the diesel generators and other safety-related and nonsafety-related components. The building is divided into two equal rooms for each diesel generator by an east-west wall. Openings in the roof allow exhaust air to exit the building. The exhaust mufflers for each of the diesel generators are enclosed on the roof of the building within a structural steel frame on a thickened portion of the reinforced concrete roof slab. Personnel entrances to the building are provided with flood barriers for flood protection. Steel panels are installed in the equipment access openings on the west side of the building for protection from flood and tornado loads including tornado missiles. The entire building is in scope for License Renewal.

The purpose of the building is to provide structural support, shelter and protection for vital mechanical and electrical equipment required for safe operation of the plant, including safe shutdown of the reactor. The building also provides shielding from post accident radiation exposure to allow personnel access for operating and maintaining the diesel generators.

Components and associated intended functions included in the evaluation boundary of the Diesel Generator Building which are in scope for License Renewal are identified in the following table.

Components not included in the Diesel Generator Building evaluation are component supports, structural commodities, miscellaneous cranes and hoists and fire barriers. Component supports are identified and separately evaluated in the Component Supports Commodity Group section. Structural commodities including structural bolting, piping insulation, component insulation, penetration sleeves including end caps, penetration seals, concrete anchors, concrete embedments, tube track, bus ducts, conduit, cable trays, cabinets, enclosures, racks, frames and panels for electrical equipment and instrumentation are identified and evaluated in the Structural Commodities section. The miscellaneous cranes and hoists are identified and evaluated with the Cranes and Hoists System and the fire barriers are evaluated with the License Renewal Fire Protection System.

For more detailed information see UFSAR Sections 2.6.5, 2.7.4, 2.7.5, 5.1.1, 5.4, 9.8.7.5, 9.9.3.2, 9.9.4.2, Appendix 11A, 11A.6, and Appendix 14A, 4.4.

Reason for Scope Determination

The Diesel Generator Building meets the scoping requirements of 10 CFR 54.4(a)(1) because it is a safety-related structure, which is relied upon to remain functional during, and following design basis events. It meets 10 CFR 54.4(a)(2) because the building provides physical support, shelter, and protection for nonsafety-related systems, structures, and components (SSCs) whose failure could prevent satisfactory accomplishment of function(s) identified for 10 CFR 54.4(a)(1). It also meets 10 CFR 54.4(a)(3) because it provides physical support, shelter/protection for systems, structures, and components (SSCs) relied upon in the safety analyses or plant evaluations to perform a function that demonstrates compliance with the Commission's regulations for Fire Protection (10 CFR 50.48), Anticipated Transient without Scram (10 CFR 50.62) and Station Blackout (10 CFR 50.63). The Emergency Diesel Generator Building is not relied upon in the safety analyses or plant evaluations to perform a function that demonstrates compliance with the Commission's regulations for Environmental Qualification (10 CFR 50.49) or Pressurized Thermal Shock (10 CFR 50.61).

System Intended Functions

1. Provides physical support, shelter and protection for safety related systems, structures, and components. 10 CFR 54.4(a)(1)
2. Provides physical support, shelter and protection for nonsafety related systems, structures, and components whose failure could prevent satisfactory accomplishment of function(s) identified for 10 CFR 54.4(a)(1). 10 CFR 54.4(a)(2)
3. Provides physical support, shelter and protection for systems, structures, and components relied upon in safety analyses or plant evaluations to perform a function that demonstrates compliance with the commission's regulations for Fire Protection (10 CFR 50.48). 10 CFR 54.4(a)(3)
4. Provides physical support and shelter and protection for systems, structures, and components relied upon in safety analyses or plant evaluations to perform a function that demonstrates compliance with the Commission's regulations for Anticipated Transient without Scram (10 CFR 50.62) 10 CFR 54.4(a)(3)
5. Provides physical support, shelter and protection for systems, structures, and components relied upon in safety analyses or plant evaluations to perform a function that demonstrates compliance with the commission's regulations for Station Blackout (10 CFR 50.63). 10 CFR 54.4(a)(3)

UFSAR References

2.6.5
2.7.4
2.7.5
5.1.1
5.4
9.8.7.5
9.9.3.2
9.9.4.2.
Appendix 11A, 11A.6
Appendix 14A, 4.4

License Renewal Boundary Drawings

LR-1E-120-01-001

Table 2.4-5 **Diesel Generator Building**
Components Subject to Aging Management Review

Component Type	Intended Functions
Concrete: Above-grade exterior	Flood Barrier
Concrete: Above-grade exterior	Missile Barrier
Concrete: Above-grade exterior	Shelter, Protection
Concrete: Above-grade exterior	Shielding
Concrete: Above-grade exterior	Structural Support
Concrete: Foundation	Structural Support
Concrete: Interior	Flood Barrier
Concrete: Interior	Missile Barrier
Concrete: Interior	Shelter, Protection
Concrete: Interior	Shielding
Concrete: Interior	Structural Support
Doors	Shelter, Protection
Equipment foundations	Structural Support
Metal components: All structural members	Flood Barrier
Miscellaneous steel (catwalks, stairs, handrails, ladders, vents and louvers, platforms, etc.)	Structural Support
Roofing	Shelter, Protection
Seals, gaskets, and moisture barriers (caulking, flashing and other sealants)	Flood Barrier
Seals, gaskets, and moisture barriers (caulking, flashing and other sealants)	Shelter, Protection
Steel components: All structural steel	Shelter, Protection
Steel components: All structural steel	Structural Support

The aging management review results for these components are provided in:

Table 3.5.2-5 Diesel Generator Building
Summary of Aging Management Evaluation

2.4.6 Dike/Flood Control System

System Purpose

The Dike/Flood Control System consists of protective dikes and a Storm Drainage and Flood Control Structure which protect the site from floods from the river with a water surface elevation less than 304'-0". The top elevation of the protective dike at the northern tip of Three Mile Island is 310'-0". The dikes along the east and west sides of the island descend uniformly from elevation 310'-0" to elevation 304'-0".

The dikes are nonsafety-related earth embankments, constructed of clay and silt. The dikes are protected by rip-rap and sand and gravel embedment material to withstand wave action and a velocity in excess of 12.0 ft/sec, on a 2-on-1 slope. The rip-rap continues downward into natural ground for a minimum depth of 2 feet to provide a cutoff against undermining. The south end of the dike at elevation 304'-0" does not contain any rip-rap. Periodic inspection of the dikes after flow periods (i.e., ice flow and spring flow), are performed to determine any bank erosion or riprap weathering requiring remedial action.

Included within the east side dike is the nonsafety-related reinforced concrete Storm Drainage and Flood Control Structure that penetrates the dike. Storm water collects in the earthen basin for this structure on the inboard side of the dike. Influent and effluent reinforced concrete headwalls on the inboard and outboard sides of the dike are connected with a below grade corrugated metal pipe (CMP). Failure of the CMP could result in a localized collapse of the earthen dike above. Water collected in the earthen basin is drained to the river after sampling during normal river flows. A flap gate (i.e., swing check valve) assembly on the outboard side of the dike prevent back flow to protect the island from flooding up to a river water surface elevation of 304'-0". This structure also contains a sluice gate and associated operator supported by a structural steel platform on the inboard side of the dike. The sluice gate allows storm water collected in the earthen basin to be sampled prior to discharge to the river. The earthen dike, reinforced concrete portions of the Storm Drainage and Flood Control Structure, flap gate assembly, sluice gate and operator and corrugated metal pipe are in scope for License Renewal. The sluice gate and associated operator on the inboard side of the dike are active components and, therefore, are not subject to aging management review.

The purpose of the Dike/Flood Control System is to provide protection for the site structures and equipment for a design flood of 304'-0". The dikes and Storm Drainage and Flood Control Structure are nonsafety related, however, they are included in scope for License Renewal because failure of nonsafety-related portions of the system could prevent satisfactory accomplishment of function(s) that prevent or mitigate the consequences of accidents.

Components and associated intended functions included in the evaluation boundary of the Dike/Flood Control System, which are in scope for License Renewal, are identified in the following table.

Components included in the evaluation boundary of the Dike/Flood Control System, which are not in scope for License Renewal, include the structural and miscellaneous steel, structural bolting and the earthen basin on the inboard side of the Storm Drainage and Flood Control Structure, which do not perform a License Renewal, intended function.

Components not included in the Dike/Flood Control System License Renewal evaluation

boundary are additional individual flood barriers installed on the various site structures to provide protection from a 310'-0" probable maximum flood (PMF) for components required to achieve and maintain a safe shutdown condition. These individual flood barriers are evaluated separately with each building or other structure associated with the flood barrier.

For more detailed information see UFSAR Sections 2.6 and 2.6.5.

Reason for Scope Determination

The Dike/Flood Control System is not in scope under 10 CFR 54.4(a)(1) because no portions of the system are safety-related and relied upon to remain functional during and following design basis events. The Dike/Flood Control System is in scope under 10 CFR 54.4(a)(2) because failure of nonsafety-related portions of the system could prevent satisfactory accomplishment of function(s) that prevent or mitigate the consequences of accidents. The Dike/Flood Control System is not in scope under 10 CFR 54.4(a)(3) because it is not relied upon in any safety analyses or plant evaluations to perform a function that demonstrates compliance with the Commission's regulations for Fire Protection (10 CFR 50.48), Environmental Qualification (10 CFR 50.49), Pressurized Thermal Shock (10 CFR 50.61) and Anticipated Transient Without Scram (10 CFR 50.62) or Station Blackout (10 CFR 50.63).

System Intended Functions

1. Provides protection from flooding.10 CFR 54.4(a)(1)

UFSAR References

2.6
2.6.5

License Renewal Boundary Drawings

LR-1E-120-01-001

Table 2.4-6 **Dike/Flood Control System**
Components Subject to Aging Management Review

Component Type	Intended Functions
Concrete: Above-grade exterior	Flood Barrier
Concrete: Above-grade exterior	Structural Support
Concrete: Below-grade exterior	Structural Support
Concrete: Foundation	Structural Support
Earthen water-control structures: Embankments (dikes)	Flood Barrier
Metal components: All structural members (CMP pipe)	Structural Support
Metal components: All structural members (Flap gate assembly)	Flood Barrier

The aging management review results for these components are provided in:

Table 3.5.2-6 Dike/Flood Control System
Summary of Aging Management Evaluation

2.4.7 Fuel Handling Building

System Purpose

The evaluation boundary for the Fuel Handling Building includes both the TMI-1 and TMI-2 Fuel Handling Buildings.

The TMI-1 and TMI-2 Fuel Handling Buildings are multi story reinforced concrete structure with three stories above grade and with below grade basements. The TMI-1 Fuel Handling building is located south of and adjacent to the TMI-1 Reactor Building. The building foundations are reinforced concrete mats founded on bedrock. Reinforced concrete walls extend approximately 24'-0" below grade to the top of the mat foundation and approximately 99' above grade to the top of a roof parapet. The reinforced concrete roof slabs are protected with roofing material.

The TMI-1 Fuel Handling Building contains the spent fuel pools, spent fuel cooling pumps and coolers, and new fuel storage vault. Two fuel transfer tubes in the Reactor Building penetrate the north Fuel Handling Building wall that allow for fuel movement between the fuel transfer canal in the Reactor Building and the spent fuel storage pool in the Fuel Handling Building. The tubes contain tracks for the fuel transfer carriages, gate valves on the Fuel Handling Building side, and a flanged closure on the Reactor Building side.

The TMI-2 Fuel Handling Building is located south of and adjacent to the TMI-1 Fuel Handling Building. Both buildings share a common area above elevation 348'-0" and the Fuel Handling Building Truck Bay. The buildings are maintained at a negative pressure with respect to the outside environment by the Fuel Handling Building Normal Ventilation System (FHBNVS) during normal operations and by the Fuel Handling Building Engineered Safety Feature Ventilation System (FHBESFVS) during movement of irradiated fuel.

The TMI-1 Fuel Handling Building is classified Seismic Class I and is designed for normal operating loads and to withstand the effects of design basis accident loads as applicable, which include the effects of tornado loads including tornado missiles, flooding, earthquake, aircraft impact and equipment generated missiles. The TMI-2 Fuel Handling Building is required to withstand the effects of tornado loads including tornado missiles and aircraft impact to protect the south end of the TMI-1 Fuel Handling Building.

Each structure discussed above is in the scope of License Renewal in their entirety.

The purpose of the TMI-1 and TMI-2 Fuel Handling Buildings is to provide structural support, shelter and protection for the spent fuel cooling pumps, new and spent fuel storage racks, spent fuel pools and electrical and mechanical equipment required for safe operation of the plant, including safe shutdown of the reactor. The TMI-1 Fuel Handling building also provides shielding from post accident radiation exposure to allow personnel access for operating and maintaining equipment.

Components and associated intended functions included in the evaluation boundary of the Fuel Handling Building, which are in scope for License Renewal, are identified in the following table.

Components not included in the Fuel Handling Building License Renewal evaluation boundary are component supports, structural commodities, fuel transfer tubes, new and spent fuel

storage racks, cranes and hoists, the building elevator and fire barriers. Component supports are identified and separately evaluated in the Component Supports Commodity Group section. Structural commodities including structural bolting, piping insulation, component insulation, structural bolting, penetration sleeves including end caps, penetration seals, concrete anchors, concrete embedments, tube track, bus ducts, conduit, cable trays, cabinets, enclosures, racks, frames and panels for electrical equipment and instrumentation for the Fuel Handling Building are identified and separately evaluated in the Structural Commodities section. The new and spent fuel storage racks and the fuel transfer tubes are identified and evaluated with the Fuel Handling and Fuel Storage System, and cranes and hoists are identified and evaluated with the Cranes and Hoists System. The building elevator is evaluated with the Elevators System and Fire barriers are evaluated with the Fire Protection System.

For more detailed information see UFSAR sections 1.2.7.3, 1.2.8, 1.3.2.41, 1.4.68, 1.4.69, 2.6.5, 2.7.4, 2.7.5, 5.1, 5.4, 6B.2.4.1, 9.4, 9.7.1, 9.7.2, 9.8.2, 9.8.3, 11.2, 11.3.1, 11.3.2.6, 11.4.3, 11.4.6, Appendix 11A.6, section 14.2.2.1, Appendix 14A, 4.3.

Reason for Scope Determination

The Fuel Handling Building meets 10 CFR 54.4(a)(1) because it is a safety-related structure that is relied on to remain functional during and following design basis events. It meets 10 CFR 54.4(a)(2) because the building provides physical support and shelter for nonsafety-related systems, structures, and components (SSCs) whose failure could prevent satisfactory accomplishment of function(s) identified for 10 CFR 54.4(a)(1). It also meets 10 CFR 54.4(a)(3) because it provides physical support, shelter and protection for systems, structures, and components (SSCs) relied upon in the safety analyses or plant evaluations to perform a function that demonstrates compliance with the Commission's regulations for Fire Protection (10 CFR 50.48), Environmental Qualification (10 CFR 50.49), and Anticipated Transient without Scram (10 CFR 50.62). The Fuel Handling Building is not relied upon in the safety analyses or plant evaluations to perform a function that demonstrates compliance with the Commission's regulations for Pressurized Thermal Shock (10 CFR 50.61) and Station Blackout (10 CFR 50.63).

System Intended Functions

1. Provides physical support, shelter and protection for safety related systems, structures, and components. 10 CFR 54.4(a)(1)
2. Provides radiation shielding protection for personnel and equipment/components. 10 CFR 54.4(a)(1)
3. Provides physical support, shelter and protection for nonsafety related systems, structures, and components whose failure could prevent satisfactory accomplishment of function(s) identified for 10 CFR 54.4(a)(1). 10 CFR 54.4(a)(2)
4. Provides physical support, shelter and protection for systems, structures, and components relied upon in safety analyses or plant evaluations to perform a function that demonstrates compliance with the commission's regulations for Fire Protection (10 CFR 50.48). 10 CFR 54.4(a)(3)
5. Provides physical support, shelter and protection for systems, structures, and components relied upon in safety analyses or plant evaluations to perform a function that demonstrates compliance with the commission's regulations for Environmental Qualification (10 CFR 50.49). 10 CFR 54.4(a)(3)
6. Provides physical support and shelter and protection for systems, structures, and components relied upon in safety analyses or plant evaluations to perform a function that

demonstrates compliance with the Commission's regulations for Anticipated Transient without Scram (10 CFR 50.62). 10 CFR 54.4(a)(3)

UFSAR References

1.2.7.3
1.2.8
1.3.2.41
1.4.68
1.4.69
2.6.5
2.7.4
2.7.5
5.1
5.4
6B.2.4.1
9.4
9.7.1
9.7.2
9.8.2
9.8.3
11.2
11.3.1
11.3.2.6
11.4.3
11.4.6
Appendix 11A.6
14.2.2.1
Appendix 14A, 4.3

License Renewal Boundary Drawings

LR-1E-120-01-001

Table 2.4-7 **Fuel Handling Building**
Components Subject to Aging Management Review

Component Type	Intended Functions
Bulkhead	Flood Barrier
Concrete: Above-grade exterior	Flood Barrier
Concrete: Above-grade exterior	Missile Barrier
Concrete: Above-grade exterior	Pressure Boundary
Concrete: Above-grade exterior	Shelter, Protection
Concrete: Above-grade exterior	Shielding
Concrete: Above-grade exterior	Structural Support
Concrete: Below-grade exterior	Flood Barrier
Concrete: Below-grade exterior	Missile Barrier
Concrete: Below-grade exterior	Pressure Boundary
Concrete: Below-grade exterior	Shelter, Protection
Concrete: Below-grade exterior	Shielding
Concrete: Below-grade exterior	Structural Support
Concrete: Foundation	Flood Barrier
Concrete: Foundation	Structural Support
Concrete: Interior	Flood Barrier
Concrete: Interior	Missile Barrier
Concrete: Interior	Pressure Boundary
Concrete: Interior	Shelter, Protection
Concrete: Interior	Shielding
Concrete: Interior	Structural Support
Doors	Pressure Boundary
Equipment foundations	Structural Support
Metal components: All structural members	Flood Barrier
Metal decking	Structural Support
Miscellaneous steel (catwalks, stairs, handrails, ladders, vents and louvers, platforms, etc.)	Structural Support
Penetration bellows (Fuel transfer canal penetration)	Leakage Boundary
Roofing	Shelter, Protection
Seals, gaskets, and moisture barriers (caulking, flashing and other sealants) (includes inflatable seals)	Flood Barrier
Seals, gaskets, and moisture barriers (caulking, flashing and other sealants) (includes inflatable seals)	Shelter, Protection
Steel components: All structural steel	Structural Support
Steel components: Fuel pool liner	Pressure Boundary
Steel components: Fuel pool liner	Structural Support

The aging management review results for these components are provided in:

Table 3.5.2-7 Fuel Handling Building
Summary of Aging Management Evaluation

2.4.8 Intake Screen and Pump House

System Purpose

The evaluation boundary for the Intake Screen and Pump House includes the Intake Screen and Pump House (ISPH), which is classified as safety-related, Seismic Class I, the Intake Canal located in the Susquehanna River and the nonsafety-related Diesel Fire Pump House, which is located on the north side of the ISPH.

The Intake Screen and Pump House is a reinforced concrete structure located west south west of the Reactor Building, along the western shoreline of the Three Mile Island. The building is a two-story reinforced concrete structure, with the first story located below the grade elevation of 304.0'. A portion of the west face of the structure is located within the Susquehanna River. The remaining portion of the structure is above grade. The Intake Screen and Pump House structure is founded on bedrock and has wing walls for erosion protection and concrete cutoff walls to resist undercutting. The design of the structure ensures that the pumps remain operable if the site is subject to the maximum flood level. Recirculation has been provided from the operating unit to the Intake Screen and Pump House to provide warm water to control ice problems that might develop during cold weather. The building is designed to withstand the effects of normal operating loads and design basis accident loads, which include the effects of tornado loads including tornado missiles, flooding, ice jams, earthquake, aircraft impact and equipment generated missiles.

The Intake Canal has been constructed in the Susquehanna River bed's channel to the east of the Intake Screen and Pump House to assure that there is a source of cooling water for the safe operation and shutdown of the plant.

The Diesel Fire Pump House is also a reinforced concrete structure attached to the north wall of the ISPH with its foundation mat founded on bedrock. The structure above elevation 308'-0" is enclosed with concrete masonry block walls with a roof comprised of a built-up roofing membrane on steel decking. The building is designed to withstand the effects of normal operating loads.

Each structure discussed above is in the scope of License Renewal in their entirety.

The purpose of the ISPH is to provide structural support, shelter and protection for vital mechanical and electrical equipment required for safe operation of the plant, including safe shutdown of the reactor. The building houses safety-related electrical and mechanical equipment and components such as electrical switchgear, miscellaneous electrical equipment and components and their enclosures, instrumentation and their enclosures as applicable, and pumps supplying water to safety-related systems and the Fire Protection System.

The purpose of the Intake Canal is to provide a flow path for the cooling water from the ultimate heat sink source to the ISPH for safe operation and shutdown of the plant.

The purpose of the Diesel Fire Pump House is to provide structural support, shelter and protection for nonsafety-related equipment housed within, such as a diesel fire pump, and to maintain its structural integrity to ensure it will not adversely affect the components housed within or the Intake Screen and Pump House from performing their intended functions.

Components and associated intended functions included in the evaluation boundary of the Intake Screen and Pump House, which are in scope for License Renewal, are identified in the table below.

Components not included in the evaluation boundary of the Intake Screen and Pump House are component supports, structural commodities, miscellaneous cranes and hoists and fire barriers. Component Supports included in the evaluation boundary, which are in the scope for License Renewal, are identified and separately evaluated in the Component Supports Commodity Group section. Structural commodities including structural bolting, piping insulation, component insulation, penetration sleeves including end caps, penetration seals, concrete anchors, concrete embedments, tube track, bus ducts, conduit, cable trays, cabinets, enclosures, racks, frames and panels for electrical equipment and instrumentation are identified and separately evaluated in the Structural Commodities section. The miscellaneous cranes and hoists are identified and evaluated with the Cranes and Hoists System and fire barriers are identified and evaluated with the Fire Protection System.

For more detailed information see UFSAR Sections 2.6.5, 2.7.4, 2.7.5, 5.1, 5.4, and 9.6.2.

Reason for Scope Determination

The safety-related structures included within the Intake Screen and Pump House evaluation boundary meet 10 CFR 54.4(a)(1) because they are relied upon to remain functional during and following design basis events.

The structures included within the Intake Screen and Pump House evaluation boundary meet 10 CFR 54.4(a)(2) because they provide physical support, shelter and protection for nonsafety-related systems, structures and components whose failure could prevent satisfactory accomplishment of function(s) identified for 10 CFR 54.4(a)(1) and also because failure of nonsafety-related portions could prevent satisfactory accomplishment of function(s) identified for 10 CFR 54.4(a)(1).

The structures included within the Intake Screen and Pump House evaluation boundary meet 10 CFR 54.4(a)(3) because they provide physical support, shelter and protection for systems, structures and components (SSCs) relied upon in the safety analyses or plant evaluations to perform a function that demonstrates compliance with the Commission's regulations for Fire Protection (10 CFR 50.48) and Station Blackout (10 CFR 50.63).

They are not relied upon in the safety analyses or plant evaluations to perform a function that demonstrates compliance with the Commission's regulation for Environmental Qualification (10 CFR 50.49), Anticipated Transient Without Scram (10 CFR 50.62), or Pressurized Thermal Shock (10 CFR 50.61).

System Intended Functions

1. Provides physical support, shelter and protection for safety-related systems, structures, and components. 10 CFR 54.4(a)(1)
2. Provides a source of cooling water for plant safe shutdown. 10 CFR 54.4(a)(1)
3. Provides physical support, shelter and protection for nonsafety-related systems, structures, and components whose failure could prevent satisfactory accomplishment of function(s) identified for 10 CFR 54.4 (a)(1). 10 CFR 54.4(a)(2)
4. Provides physical support, shelter and protection for systems, structures, and components

relied upon in safety analyses or plant evaluations to perform a function that demonstrates compliance with the Commission's regulations for Fire Protection (10 CFR 50.48). 10 CFR 54.4(a)(3)
5. Provides physical support, shelter and protection for systems, structures, and components relied upon in safety analyses or plant evaluations to perform a function that demonstrates compliance with the Commission's regulations for Station Blackout (10 CFR 50.63). 10 CFR 54.4(a)(3)

UFSAR References

2.6.5
2.7.4
2.7.5
5.1
5.4
9.6.2

License Renewal Boundary Drawings

LR-1E-120-01-001

Table 2.4-8 **Intake Screen and Pump House**
Components Subject to Aging Management Review

Component Type	Intended Functions
Concrete: Above-grade exterior	Flood Barrier
Concrete: Above-grade exterior	Missile Barrier
Concrete: Above-grade exterior	Shelter, Protection
Concrete: Above-grade exterior	Structural Support
Concrete: Below-grade exterior	Flood Barrier
Concrete: Below-grade exterior	Missile Barrier
Concrete: Below-grade exterior	Shelter, Protection
Concrete: Below-grade exterior	Structural Support
Concrete: Foundation	Structural Support
Concrete: Interior	Direct Flow
Concrete: Interior	Flood Barrier
Concrete: Interior	Missile Barrier
Concrete: Interior	Shelter, Protection
Concrete: Interior	Structural Support
Doors	Shelter, Protection
Equipment foundations	Structural Support
Hatches/Plugs	Shelter, Protection
Hatches/Plugs	Structural Support
Intake Canal	Direct Flow
Intake Canal	Heat Sink
Masonry walls	Shelter, Protection
Masonry walls	Structural Support
Metal components: All structural members	Flood Barrier
Metal components: All structural members	Structural Support
Metal decking	Structural Support
Miscellaneous steel (catwalks, stairs, handrails, ladders, vents and louvers, platforms, etc.)	Structural Support
Roofing	Shelter, Protection
Seals, gaskets, and moisture barriers (caulking, flashing and other sealants)	Flood Barrier
Steel components: All structural steel	Structural Support

The aging management review results for these components are provided in:

Table 3.5.2-8 Intake Screen and Pump House
Summary of Aging Management Evaluation

2.4.9 Intermediate Building

System Purpose

The evaluation boundary for the Intermediate Building includes the Seismic Class I portion of the building and the Class III or nonsafety-related portion of the building.

The Seismic Class I portion of the Intermediate Building is a reinforced concrete multi-story structure above grade with a portion of the structure approximately 10 feet below grade. The building is located north of and adjacent to the Reactor Building. The building foundation consists of continuous reinforced concrete footings under the walls which are founded on bedrock. A portion of the structure has reinforced concrete walls that extend approximately 68 feet above grade to the top of the high roof parapet. The other portion of the structure has reinforced concrete walls that extend 41 feet above grade to the top of the lower roof parapet. The roof slabs are protected with roofing material.

The nonsafety-related portion of the building is a multi-story above grade steel framed structure. The building is located east of and adjacent to the Reactor Building and west of the Heater Bay portion of the Turbine Building. The building foundation consists of a reinforced concrete mat founded on compacted backfill or undisturbed soil with portions of the mat partially supported on the Reactor Building retaining wall. The floors are constructed of steel framing with concrete slabs on metal decking or steel floor grating. The roof is constructed of metal decking on steel framing which is protected with roofing material.

The Seismic Class I portion of the building contains the Class I main steam piping, pumps and turbines and electrical and mechanical equipment and emergency feedwater piping required for safe operation of the plant, including safe shutdown of the reactor. The nonsafety-related portion of the building contains main steam and Class 1 emergency feedwater system piping required for safe operation of the plant, including safe shutdown of the reactor and 480V load centers and switchgear.

The Seismic Class I portion of the building is designed to withstand the effects of normal operating and design basis accident loads which include the effects of tornado loads including tornado missiles, flooding, earthquake and main steam turbine missiles. The rooms inside this portion of the Intermediate Building consist of reinforced concrete walls and slabs to protect safety-related components from harsh environmental conditions resulting from a postulated main steam line break and an emergency feedwater pump turbine steam line break.

Both the Seismic Class I and the nonsafety-related portions of the building are in scope for License Renewal in their entirety.

The purpose of the buildings is to provide structural support, shelter and protection for mechanical and electrical equipment required for safe operation of the plant including safe shutdown of the reactor. The reinforced concrete Class I portion of the building also provides shielding from post accident radiation exposure to allow personnel access for inspection and maintenance of the emergency feedwater pumps and associated equipment.

Components and associated intended functions included in the evaluation boundary of the Intermediate Building, which are in scope for License Renewal, are identified in the following table.

Components not included in the Intermediate Building License Renewal evaluation boundary are component supports, structural commodities, cranes and hoists and fire barriers. Component Supports are identified and evaluated in the Component Supports Commodity Group section. Structural commodities including structural bolting, piping insulation, component insulation, penetration sleeves including end caps, penetration seals, concrete anchors, concrete embedments, tube track, bus ducts, conduit, cable trays, cabinets, enclosures, racks, frames and panels for electrical equipment and instrumentation are identified and evaluated in the Structural Commodities section. Cranes and hoists are identified and evaluated with the Cranes and Hoists System. Fire barriers are identified and evaluated with the License Renewal Fire Protection system.

For more detailed information see UFSAR Sections 2.6.5, 2.7.4, 2.7.5, 5.1, 5.4, 6.5.2, 6B.2.4.1, 6B.2.4.2, 6B.2.5.1, 9.6, 9.8.6, 9.9.4, 9.10.1, 9.10.3, 10.3.1, 10.6.1.c, 10.6.2, 11.4.6, Appendix 11A, 11.A.6, Sections 14.1.2.9, 14.3, Appendix 14A.

Reason for Scope Determination

The Intermediate Building meets 10 CFR 54.4(a)(1) because it is a safety-related structure that is relied on to remain functional during and following design basis events. It meets 10 CFR 54.4(a)(2) because the building provides physical support and shelter for nonsafety-related systems, structures, and components (SSCs) whose failure could prevent satisfactory accomplishment of function(s) identified for 10 CFR 54.4(a)(1).

It also meets 10 CFR 54.4(a)(3) because it provides physical support, shelter and protection for systems, structures, and components (SSCs) relied upon in the safety analyses or plant evaluations to perform a function that demonstrates compliance with the Commission's regulations for Fire Protection (10 CFR 50.48), Environmental Qualification (10 CFR 50.49), Anticipated Transient without Scram (10 CFR 50.62) and Station Blackout (10 CFR 50.63).

The Intermediate Building is not relied upon in the safety analyses or plant evaluations to perform a function that demonstrates compliance with the Commission's regulations for Pressurized Thermal Shock (10 CFR 50.61).

System Intended Functions

1. Provides physical support, shelter and protection for safety-related systems, structures, and components. 10 CFR 54.4(a)(1)
2. Provides radiation shielding protection for personnel and equipment/components. 10 CFR 54.4(a)(1)
3. Provides physical support, shelter and protection for nonsafety-related systems, structures, and components whose failure could prevent satisfactory accomplishment of function(s) identified for 10 CFR 54.4(a)(1). 10 CFR 54.4(a)(2)
4. Provides physical support, shelter and protection for systems, structures, and components relied upon in safety analyses or plant evaluations to perform a function that demonstrates compliance with the commission's regulations for Fire Protection (10 CFR 50.48). 10 CFR 54.4(a)(3)
5. Provides physical support, shelter and protection for systems, structures, and components relied upon in safety analyses or plant evaluations to perform a function that demonstrates compliance with the commission's regulations for Environmental Qualification (10 CFR 50.49). 10 CFR 54.4(a)(3)

6. Provides physical support and shelter and protection for systems, structures, and components relied upon in safety analyses or plant evaluations to perform a function that demonstrates compliance with the Commission's regulations for Anticipated Transient without Scram (10 CFR 50.62). 10 CFR 54.4(a)(3)
7. Provides physical support, shelter and protection for systems, structures, and components relied upon in safety analyses or plant evaluations to perform a function that demonstrates compliance with the commission's regulations for Station Blackout (10 CFR 50.63). 10 CFR 54.4(a)(3)

UFSAR References

2.6.5
2.7.4
2.7.5
5.1
5.4
6.5.2
6B.2.4.1
6B.2.4.2
6B.2.5.1
9.6
9.8.6
9.9.4
9.10.1
9.10.3
10.3.1
10.6.1.c
10.6.2
11.4.6
Appendix 11A, 11A.6
14.1.2.9
14.3
Appendix 14A

License Renewal Boundary Drawings

LR-1E-120-01-001

Table 2.4-9 **Intermediate Building**
Components Subject to Aging Management Review

Component Type	Intended Functions
Concrete: Above-grade exterior	Flood Barrier
Concrete: Above-grade exterior	HELB Shielding
Concrete: Above-grade exterior	Missile Barrier
Concrete: Above-grade exterior	Shelter, Protection
Concrete: Above-grade exterior	Shielding
Concrete: Above-grade exterior	Structural Support
Concrete: Below-grade exterior	Flood Barrier
Concrete: Below-grade exterior	HELB Shielding
Concrete: Below-grade exterior	Missile Barrier
Concrete: Below-grade exterior	Shelter, Protection
Concrete: Below-grade exterior	Shielding
Concrete: Below-grade exterior	Structural Support
Concrete: Foundation	Structural Support
Concrete: Interior	Flood Barrier
Concrete: Interior	HELB Shielding
Concrete: Interior	Missile Barrier
Concrete: Interior	Pressure Boundary
Concrete: Interior	Shelter, Protection
Concrete: Interior	Shielding
Concrete: Interior	Structural Support
Doors	HELB Shielding
Equipment foundations	Structural Support
Masonry Walls	Structural Support
Metal components: All structural members	Flood Barrier
Metal decking	Structural Support
Metal panels	Structural Support
Metal siding	Shelter, Protection
Miscellaneous steel (catwalks, stairs, handrails, ladders, vents and louvers, platforms, etc.)	Structural Support
Pipe Whip Restraints and Jet Impingement Shields	HELB Shielding
Pipe Whip Restraints and Jet Impingement Shields	Pipe Whip Restraint
Roofing	Shelter, Protection
Seals, gaskets, and moisture barriers (caulking, flashing and other sealants)	Flood Barrier
Seals, gaskets, and moisture barriers (caulking, flashing and other sealants)	Shelter, Protection
Steel components: All structural steel	Structural Support

The aging management review results for these components are provided in:

Table 3.5.2-9 Intermediate Building
Summary of Aging Management Evaluation

2.4.10 Mechanical Draft Cooling Tower Structures

System Purpose

The TMI-1 Mechanical Draft Cooling Tower (MDCT) evaluation boundary includes the MDCT basin, the intake water shut off chamber, a building at the south end of the MDCT basin, the foundation and dike for the sodium bisulfate tank and the Discharge Structure - Bldg 332. These Class III structures are located southwest of the Reactor Building.

The MDCT basin consists of a multi cell reinforced concrete box, partly underground and partly above ground. The foundation for the box is founded on soil and extends to the west to support the intake water shut off chamber. The basin has an adjoining TMI-2 structure on the south end, which does not contain any equipment associated with the operation of TMI-1.

The intake water shut off chamber is a reinforced concrete box, also partly above and partly underground, with steel grating covering the open top. This structure contains an access ladder and a valve operator with linkage to operate the river water discharge isolation valve at the bottom of the chamber. The valve operator is supported with a carbon steel support beam at the top of the chamber.

The building at the south end of the MDCT basin consists of reinforced masonry block and concrete walls and a reinforced concrete roof slab. The building currently houses obsolete equipment associated with operation of the MDCT prior to removal of the mechanical draft cooling tower fill. This building also houses non-safety related equipment associated with the Water Treatment and Distribution System, Instrument and Control Air System, deluge water piping and the sodium bisulfate injection skid associated with the River Water Biocide System.

The foundation and dike for the sodium bisulfate tank provide support and provide spill containment for the tank on the roof of the MDCT basin.

The Discharge Structure is a reinforced concrete box partly underground and partly above ground. The foundation for the box is founded on soil with steel grating covering the open top. It is adjacent to the Discharge Monitoring Building 332.

Safety-related river discharge piping from the Nuclear Services and Decay Heat River Water Systems associated with the Open Cycle Cooling Water System is connected to the east wall of the intake water shut off chamber. The river discharge piping is then connected to the west wall of the intake water shut off chamber and the east wall of the MDCT basin allowing water to flow through the intake water shut off chamber and into the basin. Water inside the basin flows through various compartments and then overflows a 9’-0” high weir (wall) to exit the basin through the outlet river discharge piping connected to the floor slab (foundation mat) in the northwest corner of the basin. The basin also contains a 21'-6" foot high weir (wall) for overflow to a secondary outlet to a river discharge pipe connected to the west wall of the basin. The discharge piping from the MDCT basin is connected to opposite sides of the discharge structure which allows water to flow into and then exit the structure to be discharged to the river.

The purpose of the MDCT basin, intake water shut off chamber and the discharge structure is to provide support for the inlet and outlet river discharge piping associated with the safety-related Nuclear Services and Decay Heat River Water Systems. The MDCT basin, including

the internal walls, intake water shut off chamber and the discharge structure are also required to maintain their structural integrity to provide a flow path for the inlet and outlet river discharge piping.

Thus, only the MDCT basin, intake water shut off chamber and discharge structure that provide structural support and flow path for the inlet and outlet river discharge piping are in the scope of License Renewal.

Components included in the scope of License Renewal include reinforced concrete (walls, slab, foundation), steel components (ladders, grating) and concrete embedments. These components provide structural support and water retaining boundary (flow path) for the MDCT basin, intake water shut off chamber.

The remaining parts of the MDCT Structures which include the building, the adjoining TMI-2 structure and the sodium bisulfate tank foundation and dike are not in the scope of License Renewal because they do not perform any intended functions and their failure will not impact any intended functions.

Components and associated intended functions included in the evaluation boundary of the MDCT Structures which are in scope for License Renewal, are identified in the following table.

Components not included in the MDCT Structures License Renewal evaluation boundary are component supports and structural commodities. Component supports are identified and separately evaluated in the Component Supports Commodity Group section. Structural commodities including structural bolting, penetration sleeves including end caps, penetration seals, concrete anchors, concrete embedments, tube track, bus ducts, conduit, cable trays, cabinets, enclosures, racks, frames and panels for electrical equipment and instrumentation are identified and evaluated in the Structural Commodities section.

For more detailed information see UFSAR Sections 1.3.2.33, 5.1.1.3, 9.6.1, 9.6.2, 9.9.4.2, 11.2.1, 11.2.4, 11.2.5, and 11.4.3.

Reason for Scope Determination

The Mechanical Draft Cooling Tower Structures are not in scope under 10 CFR 54.4(a)(1) because no portion of the structures are safety-related or relied on to remain functional during and following design basis events. The Mechanical Draft Cooling Tower Structures are in scope under 10 CFR 54.4(a)(2) because failure of non-safety-related portions of the structures would prevent satisfactory accomplishment of function(s) identified for 10 CFR 54.4(a)(1). The Mechanical Draft Cooling Tower Structures do not meet 10CFR54.4(a)(3) because they are not relied upon in any safety analyses or plant evaluations to perform a function that demonstrates compliance with the Commission's regulation for Fire Protection (10 CFR 50.48), Environmental Qualification (10 CFR 50.49), Pressurized Thermal Shock (10 CFR 50.61), Anticipated Transient Without Scram (10 CFR 50.62) and Station Blackout (10 CFR 50.63).

System Intended Functions

1. Provides physical support, shelter and protection for nonsafety-related systems, structures, and components (SSCs) whose failure could prevent satisfactory accomplishment of function(s) identified for 10 CFR 54.4 (a)(1). 10 CFR 54.4(a)(2)

UFSAR References

1.3.2.33
5.1.1.3
9.6.1
9.6.2
9.9.4.2
11.2.1
11.2.4
11.2.5
11.4.3

License Renewal Boundary Drawings

LR-1E-120-01-001

Table 2.4-10 Mechanical Draft Cooling Tower Structures
Components Subject to Aging Management Review

Component Type	Intended Functions
Concrete: Above-grade exterior	Shelter, Protection
Concrete: Above-grade exterior	Structural Support
Concrete: Below-grade exterior	Shelter, Protection
Concrete: Below-grade exterior	Structural Support
Concrete: Foundation	Structural Support
Concrete: Interior	Direct Flow
Concrete: Interior	Shelter, Protection
Concrete: Interior	Structural Support
Miscellaneous steel (handrails, ladders, platforms, etc.)	Structural Support
Steel components: All structural steel	Structural Support

The aging management review results for these components are provided in:

Table 3.5.2-10 Mechanical Draft Cooling Tower Structures
Summary of Aging Management Evaluation

2.4.11 Miscellaneous Yard Structures

System Purpose

The evaluation boundary for Miscellaneous Yard Structures includes the following reinforced concrete structures located throughout the yard area. The reinforced concrete structures include tunnels, duct banks, manholes, reinforced concrete retaining walls and foundations for outdoor and buried tanks.

Miscellaneous Yard Structures in the scope of License Renewal are as follows:

1. Condensate Storage Tank Foundation
2. Borated Water Storage Tank Foundation
3. Diesel Fuel Storage Tank Foundation
4. Altitude Tank Foundation
5. Duct Banks and Manholes

1. Condensate Storage Tank Foundation:

The purpose of the Condensate Storage Tank Foundation is to provide structural support for the Class I component, Condensate Storage Tank. There are two Condensate Storage Tanks provided for Unit 1 operation and each tank has a 265,000 gallon capacity. One tank is located east of the Service Building and the other tank is located west of the Outage Equipment Storage Building. These tanks provide a source of water for the main and emergency feedwater system and for systems credited for the Commission's regulations for Fire Protection and Station Blackout. The tank foundation is a circular reinforced concrete slab, 50 feet in diameter and 4 feet thick, founded on compacted backfill. The Condensate Storage Tank is secured to the foundation with 1-1/2 inch diameter anchor bolts. Additionally, there is a rectangular reinforced concrete vault located on the south side of the foundation slab that houses piping and valves associated with the Condensate Storage Tank. The circular reinforced concrete slab and reinforced concrete vault are in the scope of License Renewal.

For more detailed information see UFSAR Sections 1.3.2, 1.4.6, 4.3.5, 5.1.1, 7.1.4, 8.5, 10.4, 10.6, and 14.1.2.8.4.

2. Borated Water Storage Tank Foundation:

The purpose of the Borated Water Storage Tank Foundation is to provide structural support for the Class I component, Borated Water Storage Tank. The Borated Water Storage Tank has a 350,000 gallon capacity and is located west of the Reactor Building. The Borated Water Storage Tank provides a source of borated water for the Emergency Core Cooling System and the Reactor Building Spray System. The tank foundation is a rectangular reinforced concrete slab, 40 feet wide (north-south) by 44 feet long (east-west) and 5 feet thick, founded on compacted backfill. The Borated Water Storage Tank is secured to the foundation with 2 inch diameter anchor bolts. In addition to providing structural support for the Borated Water Storage Tank, the tank foundation also provides structural support for two smaller Class I components, the Sodium Hydroxide Storage Tanks. Also included in the evaluation boundary for the Borated Water Storage Tank Foundation, is a reinforced concrete tunnel. This tunnel provides structural support and shelter and protection for the process piping from the Borated Water Storage Tank to the Auxiliary Building. The tunnel starts out above grade at the tank

foundation and is buried below grade, founded on compacted backfill, until it interfaces with the Auxiliary Building. The rectangular reinforced concrete slab and reinforced concrete tunnel are in the scope of License Renewal.

For more detailed information see UFSAR Sections 5.1.1, 5.4, 6.1, 6.2, 7.4.6, 9.1.2, 9.2 and 14.2.2.3.

3. Diesel Fuel Storage Tank Foundation

The purpose of the Diesel Fuel Storage Tank Foundation is to provide structural support for the Class I component, Diesel Fuel Storage Tank. The Diesel Fuel Storage Tank is a 30,000 gallon capacity tank and provides a source of fuel oil for the Emergency Diesel Generators. The tank foundation is a rectangular reinforced concrete slab, approximately 48 feet in length, 14 feet wide and 4 feet thick and is founded on compacted backfill. The Diesel Fuel Storage Tank is secured to the reinforced concrete foundation slab with 1" diameter u-bolts and the bottom of the reinforced concrete foundation slab is at elevation 283'-6". The tank is buried in the ground with the top of grade elevation over the tank at elevation 304'-0". Additionally, there is a rectangular reinforced concrete access manhole located over the manhole of the tank that also houses process piping to the Diesel Fuel Storage Tank. The rectangular reinforced concrete slab and reinforced concrete manhole are in the scope of License Renewal.

For more detailed information see UFSAR Sections 1.3.2, 1.4.6, 4.3.5, 5.1.1, 7.1.4, 8.5, 10.4, 10.6, and 14.1.2.8.4.

4. Altitude Tank Foundation

The purpose of the Altitude Tank Foundation is to provide structural support for the nonsafety-related component, Altitude Tank. The Altitude Tank provides an alternate source of water for the fire suppression system. The tank has a 100,000 gallon capacity above elevation 430'-0" and is located approximately 400 feet north of the Reactor Building. The tank foundation is a reinforced concrete ring wall, with an 18 foot outside diameter and a wall thickness of 14 inches. The ring wall is supported on a spread footing foundation founded on compacted backfill, that is 13 feet below grade. The Altitude Tank is secured to the reinforced concrete ring wall with 2-1/4 inch diameter anchor bolts. There is a reinforced concrete valve pit located within the internal diameter of the foundation that provides structural support and shelter and protection for the process piping and components and pumps for the Altitude Tank. The Altitude Tank foundation and valve pit are in the scope of License Renewal.

For more detailed information see UFSAR Sections 9.9.4 and 9.9.5

5. Duct Banks and Manholes

Duct banks that are used at the TMI station can be described as the placement of multiple raceways that are encased in reinforced concrete and buried within the soil or compacted backfill of the station. The duct banks' intended functions are to provide structural support and shelter and protection for the raceway that is routed. Duct banks are in the scope of License Renewal because they contain raceway that is safety-related and span between safety-related structures or support a 10 CFR 54.4 a (2) function for 10 CFR 54.4 (a)(1) components or contain raceway required to support the Commission's regulations for Fire Protection or Station Blackout.

Manholes serve as intermediate connection point(s) of duct banks that contain safety-related raceway or support a 10 CFR 54.4 a (2) function for 10 CFR 54.4 a (1) components or contain raceway required to support the Commission's regulations for Fire Protection or Station Blackout. Manholes are reinforced concrete boxes (cast in-place or precast) that are buried within the soil or compacted backfill. The manholes provide structural support and shelter and protection for electrical cable or raceway that are used to route the electrical cable. Manholes are in the scope of License Renewal because they contain raceway that is safety-related or support a 10 CFR 54.4 a (2) function for 10 CFR 54.4 (a)(1) components or contain raceway required to support the Commission's regulations for Fire Protection or Station Blackout.

The in scope duct banks and manholes are used to route electrical cable in the raceway for the following structures in scope for License Renewal:

Altitude Tank
Borated Water Storage Tank and Tunnel
Circulating Water Pump House
Condensate Water Storage Tanks
Air Intake Building and Tunnel
Control Building
Diesel Generator Building
Intake Screen and Pump House
Intermediate Building
Reactor Building
Substation
Turbine Building

Components and associated intended functions included in the evaluation boundary of the Miscellaneous Yard Structures which are in scope for License Renewal, are identified in the table below.

Components not included in the evaluation boundary of the Miscellaneous Yard Structures are component supports and structural commodities. Component Supports are identified and separately evaluated in the Component Supports Commodity Group section. Structural commodities including structural bolting, piping insulation, component insulation, penetration sleeves, conduit, cable trays, cabinets, enclosures, racks, frames and panels for electrical equipment and instrumentation are identified and separately evaluated in the Structural Commodities section.

<u>Reason for Scope Determination</u>

The safety-related structures included within the Miscellaneous Yard Structures evaluation boundary meet 10 CFR 54.4(a)(1) because portions of the structures are relied upon to remain functional during and following design basis events.

The structures included within the Miscellaneous Yard Structures evaluation boundary meet 10 CFR 54.4(a)(2) because portions of the structures provide physical support, shelter and protection for nonsafety-related systems, structures and components whose failure could prevent satisfactory accomplishment of function(s) identified for 10 CFR 54.4(a)(1) and also because failure of nonsafety-related portions could prevent satisfactory accomplishment of function(s) identified for 10 CFR 54.4(a)(1).

The structures included within the Miscellaneous Yard Structures evaluation boundary meet 10 CFR 54.4(a)(3) because portions of the structures provide physical support, shelter and protection for systems, structures and components (SSCs) relied upon in the safety analyses or plant evaluations to perform a function that demonstrates compliance with the Commission's regulations for Fire Protection (10 CFR 50.48), Anticipated Transient Without Scram (10 CFR 50.62), and Station Blackout (10 CFR 50.63).

They are not relied upon in the safety analyses or plant evaluations to perform a function that demonstrates compliance with the Commission's regulation for Environmental Qualification (10 CFR 50.49), Pressurized Thermal Shock (10 CFR 50.61).

System Intended Functions

1. Provides physical support, shelter and protection for safety-related systems, structures, and components. 10 CFR 54.4(a)(1)
2. Provides physical support, shelter and protection for nonsafety-related systems, structures, and components (SSCs) whose failure could prevent satisfactory accomplishment of function(s) identified for 10 CFR 54.4 (a)(1). 10 CFR 54.4(a)(2)
3. Provides physical support, shelter and protection for systems, structures, and components relied upon in safety analyses or plant evaluations to perform a function that demonstrates compliance with the Commission's regulations for Fire Protection (10 CFR 50.48). 10 CFR 54.4(a)(3)
4. Provides physical support, shelter and protection for systems, structures, and components relied upon in safety analyses or plant evaluations to perform a function that demonstrates compliance with the commission's regulations for Anticipated Transient Without Scram (10 CFR 50.62). 10 CFR 54.4(a)(3)
5. Provides physical support, shelter and protection for systems, structures, and components (SSCs) relied upon in safety analyses or plant evaluations to perform a function that demonstrates compliance with the Commission's regulations for Station Blackout (10 CFR 50.63). 10 CFR 54.4(a)(3)

UFSAR References

1.3.2
1.4.6
4.3.5
5.1.1
5.4
6.1
6.2
7.1.4
7.4.6
8.5
9.1.2
9.2
9.9.4
9.9.5
10.4
10.6
14.2.2.3
14.1.2.8.4

License Renewal Boundary Drawings

LR-1E-120-01-001

Table 2.4-11 **Miscellaneous Yard Structures**
Components Subject to Aging Management Review

Component Type	Intended Functions
Concrete: Above-grade exterior	Shelter, Protection
Concrete: Above-grade exterior	Structural Support
Concrete: Below-grade exterior	Shelter, Protection
Concrete: Below-grade exterior	Structural Support
Concrete: Foundation	Shelter, Protection
Concrete: Foundation	Structural Support
Concrete: Interior	Shelter, Protection
Concrete: Interior	Structural Support
Manholes & Duct banks	Shelter, Protection
Manholes & Duct banks	Structural Support
Metal components: All structural members	Shelter, Protection
Metal components: All structural members	Structural Support
Tunnel	Shelter, Protection
Tunnel	Structural Support

The aging management review results for these components are provided in:

Table 3.5.2-11 Miscellaneous Yard Structures
Summary of Aging Management Evaluation

2.4.12 Natural Draft Cooling Towers

System Purpose

The Natural Draft Cooling Towers evaluation boundary includes the reinforced concrete hyperbolic towers, the wooden fill structure, the canopy at the base of the towers and the reinforced concrete basin. The Natural Draft Cooling Towers are located approximately 600 feet northeast of the Reactor Building. The concrete basin of the cooling tower is approximately 380 feet in diameter and is founded on compacted backfill. The reinforced concrete hyperbolic towers are also founded on compacted backfill.

The condenser circulating water is cooled in the Natural Draft Cooling Towers, which are not vital for safe shutdown of the plant and are classified as a Class III structure. The water from the Natural Draft Cooling Towers is conveyed to the Circulating Water Pump House through the concrete circulating water flume canal and tunnel. Water from the concrete basin of the Natural Draft Cooling Towers is used to support the fire suppression water system. This pump is relied upon in the Fire Hazards Analysis Report for fire suppression.

The reinforced concrete basins are the portion of the Natural Draft Cooling Towers that are in scope for License Renewal. The reinforced concrete hyperbolic towers, the wooden fill structure and the canopy at the base of the towers are not in scope for License Renewal as they do not perform any intended functions and failure of these items will not impact any intended functions.

The purpose of the reinforced concrete basin of the Natural Draft Cooling Towers is to provide a source of water for the Circulating Water Pump House. The diesel fire pump required for 10 CFR 50.48 is located within the Circulating Water Pump House. The diesel fire pump draws suction from the circulating water flume canal and tunnel. Additionally, the Circulating Water Pumps located within the Circulating Water Pump House are required to provide the necessary cooling water to the Turbine Condenser to maintain condenser vacuum. Condenser vacuum is required for a plant accident scenario described in Chapter 14 of the UFSAR during a tube rupture inside the Steam Generator.

Components and associated intended functions included in the evaluation boundary of the Natural Draft Cooling Towers, which are in scope for License Renewal, are identified in the table below.

Components not included in the Natural Draft Cooling Towers License Renewal evaluation boundary are fire barriers and the circulating water flume canal which connects the Natural Draft Cooling Tower basins to the circulating water tunnel. Fire barriers are evaluated with the License Renewal Fire Protection system. The circulating water flume canal is evaluated with the License Renewal Circulating Water Pumphouse.

For more detailed information see UFSAR Sections 5.1.1, 9.6, 9.9.4 and 10.1.

Reason for Scope Determination

The Natural Draft Cooling Tower basins are not in scope under 10 CFR 54.4(a)(1) because no portion of the structures are safety-related or relied on to remain functional during and following design basis events. The Natural Draft Cooling Tower basins are in scope under 10 CFR

54.4(a)(2) because failure of non-safety-related portions of the structure would prevent satisfactory accomplishment of function(s) identified for 10 CFR 54.4(a)(1). The Natural Draft Cooling Tower basins meet 10 CFR 54.4(a)(3) because they direct flow to provided cooling water for systems, structures, and components (SSCs) relied upon in the safety analyses and plant evaluations to perform a function that demonstrates compliance with the Commission's regulations for Fire Protection (10 CFR 50.48). The Natural Draft Cooling Tower basins are not relied upon in any safety analyses or plant evaluations to perform a function that demonstrates compliance with the Commission's regulation for Environmental Qualification (10 CFR 50.49), Pressurized Thermal Shock (10 CFR 50.61), Anticipated Transient Without Scram (10 CFR 50.62) and Station Blackout (10 CFR 50.63).

System Intended Functions

1. Directs flow to provide cooling water for nonsafety-related systems, structures, and components (SSCs) whose failure could prevent satisfactory accomplishment of function(s) identified for 10 CFR 54.4 (a)(1). 10 CFR 54.4(a)(2)
2. Directs flow to provide cooling water for systems, structures, and components relied upon in safety analyses or plant evaluations to perform a function that demonstrates compliance with the commission's regulations for Fire Protection (10 CFR 50.48). 10 CFR 54.4(a)(3)

UFSAR References

5.1.1
9.6
9.9.4
10.1

License Renewal Boundary Drawings

LR-1E-120-01-001

Table 2.4-12 **Natural Draft Cooling Towers**
Components Subject to Aging Management Review

Component Type	Intended Functions
Concrete: Above-grade exterior	Direct Flow
Concrete: Above-grade exterior	Structural Support
Concrete: Foundation	Direct Flow
Concrete: Foundation	Structural Support

The aging management review results for these components are provided in:

Table 3.5.2-12 Natural Draft Cooling Towers
Summary of Aging Management Evaluation

2.4.13 Structural Commodities

System Purpose

Structural commodities are component groups that share material and environment properties allowing a common program to manage their aging effects. Structural commodities include structural bolting, concrete anchors and embedments, conduit, cable trays, tube track, cabinets, enclosures, racks, frames and panels for electrical equipment and instrumentation, penetration sleeves including end caps, penetration seals, bus ducts, and piping and component insulation.

Structural bolting in scope for License Renewal includes bolting which provides structural support for connections associated with structural steel assemblies which are in scope for License Renewal. Not included in the evaluation boundary for this commodity is Reactor Building pressure retaining bolting, structural bolts for cranes and hoists and structural bolting associated with component supports. Reactor Building pressure retaining bolting is identified and evaluated with the Reactor Building. Structural bolts for cranes and hoists are identified and evaluated with the Cranes and Hoists License Renewal system. Structural bolting associated with component supports is identified and evaluated with the Component Supports Commodity Group.

Concrete anchors and embedments:

Concrete anchors and embedments (i.e., embedded plates) in scope for License Renewal include expansion and grouted anchor bolts and embedments (including studs) that perform an intended function for structural support for various structural, mechanical and electrical system components and commodities that are in scope for License Renewal.

Conduit, cable trays, tube track, cabinets, enclosures, racks, frames and panels for electrical equipment and instrumentation:

Conduit, cable trays, tube track, cabinets, enclosures, racks, frames and panels for electrical equipment and instrumentation in scope for License Renewal include those items that provide structural support or shelter and protection for various mechanical and electrical system components and commodities that are in scope for License Renewal.

Penetration sleeves including end caps and penetration seals:

Penetration sleeves including end caps and penetration seals in scope for License Renewal include those items that perform various License Renewal intended functions for shelter and protection, flood barrier, pressure boundary, radiation shielding and HELB shielding for structures which are in scope for License Renewal. Not included in the evaluation boundary for this commodity are primary containment penetration sleeves and seals and fire barrier penetration seals. Primary containment penetration sleeves including end caps are identified and evaluated with the Reactor Building. Fire barrier penetration seals are identified and evaluated with the License Renewal Fire Protection System.

Bus Ducts:

Bus ducts and associated rain covers in the scope for License Renewal include those items

that perform a License Renewal intended function for shelter and protection for metal enclosed buses that are in scope for License Renewal.

Piping and component insulation:

Piping and component insulation includes the insulation and associated metal jacketing for all piping and components. Piping insulation and component insulation is comprised of pre-fabricated blankets, modules, or panels engineered as integrated assemblies to fit the surface to be insulated and to fit easily against the piping and components.

Metallic insulation consists of stainless steel mirror insulation. Nonmetallic insulation consists of asbestos and light density, semi-rigid fibrous glass (pad) insulation, quilted between two layers of glass scrim and encapsulated in a fiberglass cloth, jackets forming a composite blanket; pre-molded fiberglass modules and panels encased in fiberglass cloth jackets or calcium silicate. Anti-sweat or freeze protection insulation consists of closed cell, foamed plastic type, cellular glass or fiberglass (inside containment) and fiberglass or mineral wool (outside containment). Metal protective jackets are made from rolled aluminum or stainless steel.

The purpose of insulation is to improve thermal efficiency, minimize heat loads on the HVAC systems, provide for personnel protection, or prevent freezing of heat traced piping and sweating of cold piping and components. The insulation jacketing shelters and protects the associated insulation. Insulation is also used to protect penetration concrete in close proximity to hot piping to maintain concrete temperatures within allowable limits. Designated insulation inside the Reactor Building is safety-related and is required to resist seismic loading conditions and therefore is in scope for License Renewal since its failure could impact a function defined for 10 CFR 54.4 (a)(1).

Nonsafety-related piping and component insulation located inside structures in the scope of License Renewal can be required to protect nearby safety related components from overheating and therefore is in scope for License Renewal since its failure could impact a function defined for 10 CFR 54.4 (a)(2). Nonsafety-related piping and component insulation which performs a function for freeze protection of heat traced piping and components is also the scope of License Renewal under 10 CFR 54.4 (a)(2).

Anti-sweat piping and component insulation does not perform a License Renewal intended function and is not included in the scope of License Renewal. Also, thermal piping and component insulation located inside structures that are not in the scope of License Renewal is not in the scope of License Renewal since failure of this insulation will not impact an intended safety-related function.

For more detailed information regarding structural commodities see UFSAR Sections 1.4.56, Table 4.2-1, 4.2.2.7, 4.4.1.7, 5.1, 5.2.2.4, and 8.2.2.10.g.

Reason for Scope Determination

Structural Commodities are in scope under 10 CFR 54.4(a)(1) because some of the items are safety-related or relied on to remain functional during and following design basis events. Structural Commodities are in scope under 10 CFR 54.4(a)(2) because failure of a nonsafety-related commodity could prevent satisfactory accomplishment of function(s) identified for 10 CFR 54.4(a)(1). Structural Commodities are in scope under 10 CFR 54.4(a)(3) because some of the items are relied upon in safety analyses or plant evaluations to perform a function that

demonstrates compliance with the Commission's regulations for Fire Protection (10 CFR 50.48).
Structural Commodities are not relied upon in any safety analyses or plant evaluations to perform a function that demonstrates compliance with the Commission's regulation for Environmental Qualification (10 CFR 50.49), Pressurized Thermal Shock (10 CFR 50.61), Anticipated Transient Without Scram (10 CFR 50.62), or Station Blackout (10 CFR 50.63).

System Intended Functions

1. Provides physical support, shelter and protection for safety-related systems, structures, and components (SSCs). 10 CFR 54.4(a)(1)
2. Provides physical support, shelter and protection for nonsafety-related systems, structures, and components (SSCs) whose failure could prevent satisfactory accomplishment of function(s) identified for 10 CFR 54.4 (a)(1). 10 CFR 54.4(a)(2)
3. Provides physical support, shelter and protection for systems, structures, and components (SSCs) relied upon in safety analyses or plant evaluations to perform a function that demonstrates compliance with the Commission's regulations for Fire Protection (10 CFR 50.48). 10 CFR 54.4(a)(3)

UFSAR References

1.4.56
Table 4.2-1
4.2.2.7
4.4.1.7
5.1
5.2.2.4
8.2.2.10.g.

License Renewal Boundary Drawings

LR-1E-120-01-001

Table 2.4-13 **Structural Commodities**
Components Subject to Aging Management Review

Component Type	Intended Functions
Bus Ducts	Shelter, Protection
Cabinets, Enclosures and Panels for Electrical Equipment and Instrumentation	Shelter, Protection
Cabinets, Enclosures and Panels for Electrical Equipment and Instrumentation	Structural Support
Cable Trays	Structural Support
Concrete Anchors	Structural Support
Concrete Embedments	Structural Support
Conduit	Shelter, Protection
Conduit	Structural Support
Frames and Racks for Electrical Equipment and Instrumentation	Structural Support
Insulation	Insulate
Insulation Jacketing	Shelter, Protection
Penetration Seals	Flood Barrier
Penetration Seals	HELB Shielding
Penetration Seals	Pressure Boundary
Penetration Seals	Structural Support
Penetration Sleeves Including End Caps	Flood Barrier
Penetration Sleeves Including End Caps	HELB Shielding
Penetration Sleeves Including End Caps	Pressure Boundary
Penetration Sleeves Including End Caps	Shielding
Structural Bolting	Structural Support
Tube Track	Structural Support

The aging management review results for these components are provided in:

Table 3.5.2-13 Structural Commodities
Summary of Aging Management Evaluation

2.4.14 Reactor Building

System Purpose

The Reactor Building is a reinforced concrete structure with cylindrical wall, a flat foundation mat, and a shallow dome roof. The foundation slab is reinforced with conventional mild steel reinforcing. The cylindrical wall is prestressed with a post-tensioning system in the vertical and horizontal directions. The dome roof is prestressed using a three way post-tensioning system consisting of three groups of tendons oriented at 120 degrees with respect to each other. The inside surface of the Reactor Building is lined with a carbon steel liner to ensure a high degree of leak tightness during operation and accident conditions. Normal plate thickness is 3/8 inch for the cylinder and dome and ¼ inch for the base.

The foundation mat is founded on bedrock and is a nominal 9 feet thick with a 2 foot thick concrete slab above the bottom ¼ inch liner plate. The cylinder portion has an inside diameter of 130 feet, a wall thickness of 3 feet 6 inches, and a height of approximately 187 feet from the top of foundation slab to the high point inside the dome. The shallow dome roof has a large radius of 110 feet, a transition radius of 20 feet 6 inches, and a thickness of 3 feet.

The Reactor Building is designed to withstand the effects of design basis accident loads as applicable, which include the effects of tornado wind, missiles, flooding, earthquake, LOCA, aircraft impact and equipment generated missiles. Additionally this structure is designed for normal operating loads.

Personnel and equipment access to the structure is provided by air locks, two for personnel and one for equipment. One of the two personnel access locks penetrates the dished head of the equipment hatch and the other personnel access hatch has a 9 feet 6 inch inside diameter, with each personnel hatch constructed as a welded steel assembly with double doors equipped with double gaskets to provide an air space that can be pressurized to the Reactor Building design pressure for leak testing or fluid blocking. The equipment hatch, which has an inside diameter of 22 feet 4 inches, has been provided to enable passage of large equipment and components into the Reactor Building during plant shutdown. The Reactor Building also contains two stair towers and an elevator for personnel access within the building.

The Reactor Building contains the fuel transfer canal, which is a reinforced concrete structure lined with stainless steel plate above the reactor vessel and is filled with borated water for refueling. The south (deep) portion of the fuel transfer canal is normally used for the storage of the reactor vessel internals and plenum assembly.

Two fuel transfer tubes in the fuel transfer canal penetrate the south wall of the Reactor Building and the north wall of the Fuel Handling Building, which allows for fuel movement between the fuel transfer canal and the spent fuel storage pool. The tubes contain tracks for the fuel transfer carriages, gate valves on the Fuel Handling Building side, and a flanged closure on the Reactor Building side.

The Reactor Building interior structure comprises the following elements:

1. Basement floor
2. Intermediate floor

3. Operating floor
4. Reactor cavity, the surrounding concrete wall is referred to as the primary shield wall
5. Two steam generator compartments, the surrounding walls are referred to as the secondary shield walls
6. Refueling transfer canal (located between the steam generator compartments and above the reactor cavity)
7. Equipment supports
8. Piping supports and pipe-whipping restraints
9. Removable CRDM missile shield
10. Incore instrumentation trench

In addition the Reactor Building includes the following exterior structural features:

1. Annular reinforced concrete tendon access gallery below the base slab of the Reactor Building.
2. Exterior reinforced concrete retaining wall and associated roof.
3. Ventilation exhaust stack which traverses up the exterior Reactor Building dome wall. The ventilation exhaust attack is constructed of structural steel covered with gunite.

The entire structure noted above is in the scope of License Renewal.

The purpose of the Reactor Building is to limit the release of radioactive fission products following an accident to limit dose to the public and the control room operators. Additionally, the Reactor Building provides structural support, shelter and protection for vital mechanical and electrical equipment (e.g., the reactor, the reactor coolant system, the steam generators, pressurizer, and portions of the auxiliary and engineered safety features systems) required for safe operation of the plant, including safe shutdown of the reactor.

Components and associated intended functions included in the evaluation boundary of the Reactor Building, which are in scope for License Renewal, are identified in the following table.

Components not included in the evaluation boundary of the building are component supports, structural commodities, the polar crane, other miscellaneous cranes, the building elevator, fire barriers, the fuel transfer tubes and associated valves and the reactor building sump liner. Component Supports are identified and separately evaluated in the Component Supports Commodity Group section. Structural commodities including structural bolting; piping insulation; component insulation; conduit; cable trays; cabinets, enclosures, racks, frames and panels for electrical equipment and instrumentation; concrete anchors; concrete embedments; bus ducts and tube track are identified and evaluated in the Structural Commodities section. The polar crane and other miscellaneous cranes are evaluated with the Cranes and Hoists System, the building elevator is evaluated with the Elevators System and fire barriers are evaluated with the Fire Protection System. The fuel transfer tubes and associated valves are evaluated with the Spent Fuel Pool Cooling System. The reactor building sump liner is evaluated with the Reactor Building Sump and Drain System.

For more detailed information see UFSAR Sections 1.2, 2.6.5, 2.7.2, 2.7.3, 2.7.4, 2.7.5, 4.2, 5.1.1, 5.1.2, 5.2, Appendices 5A, 5B, 5C, 5D, 5E, Section 6.0, Section 9.7.1, and Sections 14.1.2.9 and 14.1.2.10.

Reason for Scope Determination

The Reactor Building meets 10 CFR 54.4(a)(1) because it is a safety-related structure that is relied upon to remain functional during and following design basis events. It meets 10 CFR 54.4(a)(2) because the structure provides physical support, shelter and protection for nonsafety-related systems, structures and components whose failure could prevent satisfactory accomplishment of function(s) identified for 10 CFR 54.4(a)(1). The Reactor Building also meets 10 CFR 54.4(a)(3) because it provides physical support, shelter and protection for systems, structures and components (SSCs) relied upon in the safety analyses or plant evaluations to perform a function that demonstrates compliance with the Commission's regulations for Fire Protection (10 CFR 50.48), Environmental Qualification (10 CFR 50.49), Anticipated Transient Without Scram (10 CFR 50.62), and Station Blackout (10 CFR 50.63). The Reactor Building is not relied upon in any safety analyses or plant evaluations to perform a function that demonstrates compliance with the Commission's regulations for Pressurized Thermal Shock (10 CFR 50.61).

System Intended Functions

1. Provides physical support, shelter and protection for safety-related systems, structures, and components (SSCs). 10 CFR 54.4(a)(1)
2. Controls the potential release of fission products to the external environment so that offsite consequences of design basis events are within acceptable limits. 10 CFR 54.4(a)(1)
3. Provides sufficient air and water volumes to absorb the energy released to the containment in the event of design basis events so that the pressure is within acceptable limits. 10 CFR 54.4 (a)(1)
4. Provides pressure boundary protection for design basis accidents and events. 10 CFR 54.4(a)(1)
5. Provides physical support, shelter and protection for nonsafety-related systems, structures, and components (SSCs) whose failure could prevent satisfactory accomplishment of function(s) identified for 10 CFR 54.4 (a)(1). 10 CFR 54.4(a)(2)
6. Provides a safe means for handling safety-related components and loads above or near safety-related components. 10 CFR 54.4(a)(2)
8. Provides physical support, shelter and protection for systems, structures, and components (SSCs) relied upon in safety analyses or plant evaluations to perform a function that demonstrates compliance with the Commission's regulations for Fire Protection (10 CFR 50.48). 10 CFR 54.4(a)(3)
9. Provides physical support, shelter and protection for systems, structures, and components (SSCs) relied upon in safety analyses or plant evaluations to perform a function that demonstrates compliance with the Commission's regulations for Environmental Qualification (10 CFR 50.49). 10 CFR 54.4(a)(3)
10. Provides physical support, shelter and protection for systems, structures, and components (SSCs) relied upon in safety analyses or plant evaluations to perform a function that demonstrates compliance with the Commission's regulations for Anticipated Transient without Scram (10 CFR 50.62). 10 CFR 54.4(a)(3)
11. Provides physical support, shelter and protection for systems, structures, and components (SSCs) relied upon in safety analyses or plant evaluations to perform a function that demonstrates compliance with the Commission's regulations for Station Blackout (10 CFR 50.63). 10 CFR 54.4(a)(3)

UFSAR References

1.2
2.6.5
2.7.2
2.7.3
2.7.4
2.7.5
4.2
5.1.1
5.1.2
5.2
Appendix 5A
Appendix 5B
Appendix 5C
Appendix 5D
Appendix 5E
6.0
9.7.1
14.1.2.9
14.1.2.10

License Renewal Boundary Drawings

LR-1E-120-01-001

Table 2.4-14 **Reactor Building**
Components Subject to Aging Management Review

Component Type	Intended Functions
Concrete: Above-grade exterior	Flood Barrier
Concrete: Above-grade exterior	Shelter, Protection
Concrete: Above-grade exterior	Structural Support
Concrete: Below-grade exterior	Flood Barrier
Concrete: Below-grade exterior	Shelter, Protection
Concrete: Below-grade exterior	Structural Support
Concrete: Dome; wall; basemat; ring girders; buttresses	Flood Barrier
Concrete: Dome; wall; basemat; ring girders; buttresses	HELB Shielding
Concrete: Dome; wall; basemat; ring girders; buttresses	Missile Barrier
Concrete: Dome; wall; basemat; ring girders; buttresses	Pressure Boundary
Concrete: Dome; wall; basemat; ring girders; buttresses	Shelter, Protection
Concrete: Dome; wall; basemat; ring girders; buttresses	Shielding
Concrete: Dome; wall; basemat; ring girders; buttresses	Structural Support
Concrete: Foundation	Flood Barrier
Concrete: Foundation	Structural Support
Concrete: Interior	Flood Barrier
Concrete: Interior	HELB Shielding
Concrete: Interior	Missile Barrier
Concrete: Interior	Shelter, Protection
Concrete: Interior	Shielding
Concrete: Interior	Structural Support
Equipment foundations	Structural Support
Fuel transfer canal liner	Leakage Boundary
Fuel transfer canal liner	Structural Support
Hatches/Plugs	Missile Barrier
Hatches/Plugs	Shielding
Hatches/Plugs	Structural Support
Masonry walls	Structural Support
Metal decking	Structural Support
Miscellaneous steel (catwalks, stairs, handrails, ladders, platforms, etc.)	Structural Support
Penetration Bellows (Fuel transfer canal penetration)	Leakage Boundary

Penetration Sleeve (Closure Plates)	Flood Barrier
Penetration Sleeve (Closure Plates)	HELB Shielding
Penetration Sleeve (Closure Plates)	Pressure Boundary
Penetration Sleeve (Closure Plates)	Shelter, Protection
Penetration Sleeve (Closure Plates)	Shielding
Penetration Sleeve (Closure Plates)	Structural Support
Penetration Sleeves	Flood Barrier
Penetration Sleeves	HELB Shielding
Penetration Sleeves	Pressure Boundary
Penetration Sleeves	Shelter, Protection
Penetration Sleeves	Shielding
Penetration Sleeves	Structural Support
Personnel airlock, equipment hatch	Flood Barrier
Personnel airlock, equipment hatch	Pressure Boundary
Personnel airlock, equipment hatch	Shelter, Protection
Personnel airlock, equipment hatch	Structural Support
Personnel airlock, equipment hatch: Locks, hinges, and closure mechanisms	Structural Support
Pipe Whip Restraints and Jet Impingement Shields	HELB Shielding
Pipe Whip Restraints and Jet Impingement Shields	Pipe Whip Restraint
Pressure Retaining Bolting	Pressure Boundary
Prestressing system: Tendons	Structural Support
Prestressing system: Tendons; anchorage components	Structural Support
Reactor Cavity Seal Plate	Leakage Boundary
Reactor Cavity Seal Plate	Structural Support
Seals, gaskets, and moisture barriers	Pressure Boundary
Steel components: All structural steel	Structural Support
Steel elements: Liner; Liner anchors; Integral attachments	Pressure Boundary
Ventilation Exhaust Stack	Shelter, Protection
Ventilation Exhaust Stack	Structural Support

The aging management review results for these components are provided in:

Table 3.5.2-14 Reactor Building
Summary of Aging Management Evaluation

2.4.15 SBO Diesel Generator Building

System Purpose

The SBO Diesel Generator Building is a single story reinforced concrete structure above grade with a below grade basement. The building is located adjacent to the west wall of the TMI-2 Fuel Handling Building. The building foundation is a reinforced concrete mat (i.e., slab) founded on compacted backfill. Reinforced concrete walls extend approximately 24'-0" below grade level to the top of the mat foundation and approximately 27'-0" above grade to the top of a roof parapet. The roof slab is protected with roofing material. The building is classified nonsafety-related.

The building contains the SBO Diesel Generator and associated electrical and mechanical equipment rooms (east and west sides of building), the abandoned TMI-2 “B” Diesel Generator (west side of building), and the fuel oil storage tank rooms (south end of building). The basement area (elevation 280’-6”) is divided into two equal rooms by a north-south wall. Several stairways and platforms allow movement within the building and access to the equipment.

The purpose of the building is to provide structural support, shelter and protection for the nonsafety-related SBO diesel generator, the SBO diesel oil storage tank, electrical and mechanical components associated with operation of the SBO diesel generator and other nonsafety-related components.

Components and associated intended functions included in the evaluation boundary of the SBO Diesel Generator Building which are in scope for License Renewal are identified in the following table.

Components not included in the SBO Diesel Generator Building License Renewal evaluation boundary are component supports, structural commodities, overhead hoists, SBO diesel oil storage tank and fire barriers. Component Supports are identified and separately evaluated in the Component Supports Commodity Group section. Structural commodities including structural bolting, piping insulation, component insulation, penetration sleeves including end caps, penetration seals, concrete anchors, concrete embedments, tube track, bus ducts, conduit, cable trays, cabinets, enclosures, racks, frames and panels for electrical equipment and instrumentation are identified and separately evaluated in the Structural Commodities section. The overhead hoists are evaluated with the Cranes and Hoists System. The SBO diesel oil storage tank is evaluated with the Station Blackout and UPS Diesel Generator System. Fire barriers are evaluated with the Fire Protection System.

For more detailed information see UFSAR Sections 2.7.4, 2.7.5 and 8.5.2.

Reason for Scope Determination

The SBO Diesel Generator Building is not in scope under 10 CFR 54.4(a)(1) because no portions of the structure are safety-related or relied on to remain functional during and following design basis events. The SBO Diesel Generator Building is not in scope under 10 CFR 54.4(a)(2) because failure of non-safety-related portions of the structure would not prevent satisfactory accomplishment of function(s) identified for 10 CFR 54.4(a)(1). The SBO Diesel Generator Building meets 10 CFR 54.4(a)(3) because it provides physical support, shelter and

protection for systems, structures, and components (SSCs) relied upon in the safety analyses and plant evaluations to perform a function that demonstrates compliance with the Commission's regulations for Station Blackout (10 CFR 50.63). The Building is not relied upon in any safety analyses or plant evaluations to perform a function that demonstrates compliance with the Commission's regulation for Fire Protection (10 CFR 50.48), Environmental Qualification (10 CFR 50.49), Pressurized Thermal Shock (10 CFR 50.61) and Anticipated Transient Without Scram (10 CFR 50.62).

System Intended Functions

1. Provides physical support, shelter and protection for systems, structures, and components relied upon in safety analyses or plant evaluations to perform a function that demonstrates compliance with the Commission's regulations for Station Blackout (10 CFR 50.63). 10 CFR 54.4(a)(3)

UFSAR References

2.7.4
2.7.5
8.5.2

License Renewal Boundary Drawings

LR-1E-120-01-001

Table 2.4-15 **SBO Diesel Generator Building**
Components Subject to Aging Management Review

Component Type	Intended Functions
Concrete: Above-grade exterior	Shelter, Protection
Concrete: Above-grade exterior	Structural Support
Concrete: Below-grade exterior	Shelter, Protection
Concrete: Below-grade exterior	Structural Support
Concrete: Foundation	Structural Support
Concrete: Interior	Shelter, Protection
Concrete: Interior	Structural Support
Doors	Shelter, Protection
Equipment foundations	Structural Support
Miscellaneous steel (vents and louvers.)	Shelter, Protection
Roofing	Shelter, Protection
Seals, gaskets, and moisture barriers (caulking, flashing and other sealants)	Shelter, Protection
Steel components: All structural steel	Shelter, Protection

The aging management review results for these components are provided in:

Table 3.5.2-15 SBO Diesel Generator Building
Summary of Aging Management Evaluation

2.4.16 Service Building

System Purpose

The evaluation boundary for the Service Building includes the Service Building and Machine Shop, which are classified as Class III structures and designed to withstand the effects of normal operating loads. The Service Building and Machine Shop are adjacent to each other and are located northeast of the Reactor Building and north of the Turbine Building.

The Service Building is a single story above grade steel framed structure. The exterior walls are constructed of masonry block with a brick veneer façade. The interior of the building has been partitioned to provide space for offices, conference rooms, locker rooms, restrooms, and storage. The building foundation consists of below grade reinforced concrete grade beams on piers with intermittent square footings under the exterior walls and reinforced concrete piers on square footings under the interior steel columns. All reinforced concrete footings are founded on compacted backfill. Some of the interior reinforced concrete piers and a portion of the exterior reinforced concrete grade beam are supported on the reinforced concrete circulating water pipe tunnel which passes under the Service Building concrete floor slab at elevation 305'-0". The roof is constructed of metal decking on structural steel framing or trusses, which is protected with roofing material.

The Machine Shop is a two story above grade steel framed structure. The exterior walls are constructed of masonry block with a brick veneer façade. The interior of the building consists of mechanical and electrical shop areas for plant personnel. The building foundation consists of below grade reinforced concrete grade beams on piers with intermittent square footing under the exterior walls and reinforced concrete piers on square footings under the interior steel columns. All reinforced concrete footings are founded on compacted backfill. Some of the interior steel columns are supported on the foundations for the Diesel Generator and Intermediate Buildings. The Machine Shop has a reinforced concrete floor slab at elevation 305'-0". The roof is constructed of metal decking on structural steel framing or trusses, which is protected with roofing material.

Each of the above buildings included within the Service Building evaluation boundary are in scope for License Renewal in their entirety.

The purpose of the Service Building is to provide structural support, shelter and protection for safety-related mechanical components required for safe operation of the plant, including safe shutdown of the reactor. The Machine Shop also provides structural support, shelter and protection for components required for fire protection, 10 CFR 50.48.

Components and associated intended functions included in the evaluation boundary of the Service Building, which are in scope for License Renewal, are identified in the following table.

Components not included in the Service Building License Renewal evaluation boundary are component supports, structural commodities and fire barriers. Component Supports are identified and separately evaluated in the Component Supports Commodity Group section. Structural commodities including structural bolting, piping insulation, component insulation, penetration sleeves including end caps, penetration seals, concrete anchors, concrete embedments, tube track, bus ducts, conduit, cable trays, cabinets, enclosures, racks, frames and panels for electrical equipment and instrumentation are identified and evaluated in the

Structural Commodities section. Fire barriers are identified and evaluated with the License Renewal Fire Protection system.

For more detailed information see UFSAR Sections 5.1.1.3, 9.8.7 and 9.9.4.3.

Reason for Scope Determination

The Service Building is not in scope under 10 CFR 54.4(a)(1) because no portions of the structure are safety-related and relied on to remain functional during and following design basis events. It meets 10 CFR 54.4(a)(2) because the building is nonsafety-related and provides physical support and shelter for safety-related structures, and components (SSCs) and nonsafety-related SSCs whose failure could prevent satisfactory accomplishment of function(s) identified for 10 CFR 54.4(a)(1).

It also meets 10 CFR 54.4(a)(3) because it provides physical support, shelter and protection for systems, structures, and components (SSCs) relied upon in the safety analyses or plant evaluations to perform a function that demonstrates compliance with the Commission's regulations for Fire Protection (10 CFR 50.48).

The Service Building is not relied upon in the safety analyses or plant evaluations to perform a function that demonstrates compliance with the Commission's regulations for Environmental Qualification (10 CFR 50.49), Pressurized Thermal Shock (10 CFR 50.61), Anticipated Transient without Scram (10 CFR 50.62) and Station Blackout (10 CFR 50.63).

System Intended Functions

1. Provides physical support, shelter and protection for safety related systems, structures, and components. 10 CFR 54.4(a)(2)
2. Provides physical support, shelter and protection for systems, structures, and components relied upon in safety analyses or plant evaluations to perform a function that demonstrates compliance with the commission's regulations for Fire Protection (10 CFR 50.48). 10 CFR 54.4(a)(3)

UFSAR References

5.1.1.3
9.8.7
9.9.4.3

License Renewal Boundary Drawings

LR-1E-120-01-001

Table 2.4-16 **Service Building**
Components Subject to Aging Management Review

Component Type	Intended Functions
Concrete: Below-grade exterior	Structural Support
Concrete: Foundation	Structural Support
Concrete: Interior	Shelter, Protection
Concrete: Interior	Structural Support
Doors	Shelter, Protection
Equipment foundations	Structural Support
Masonry walls	Shelter, Protection
Masonry walls	Structural Support
Metal decking	Structural Support
Miscellaneous steel (catwalks, stairs, handrails, ladders, vents and louvers, platforms, etc.)	Structural Support
Roofing	Shelter, Protection
Steel components: All structural steel	Structural Support

The aging management review results for these components are provided in:

Table 3.5.2-16 Service Building
Summary of Aging Management Evaluation

2.4.17 Component Supports Commodity Group

System Purpose

The Component Support Commodity Group consists of structural elements and specialty components designed to transfer the load applied from a system, structure, or component (SSC) to the building structural element or directly to the building foundation. The commodity group is comprised of the following supports:

Supports for ASME Class 1, 2 and 3 piping and components

Constant and variable load spring hangers; guides; stops

Anchorage of Racks, Panels, Cabinets, and Enclosures for Electrical Equipment and Instrumentation

Supports for Cable Trays, Conduit, HVAC Ducts, Instrument Tubing, Non-ASME Piping and Components

Supports for Emergency Diesel Generator (EDG), HVAC System Components,

Supports for Platforms, Pipe Whip Restraints, Jet Impingement Shields, Masonry Walls

The purpose of a support is to transfer gravity, thermal, seismic, and other lateral loads imposed on or by SSC to the supporting building structural element or foundation. Sliding surfaces, when incorporated into the support design, permit release of lateral forces, but are relied upon to carry vertical load. Specialty supports such as snubbers only resist seismic forces. Vibration isolators are incorporated in the design of some vibrating equipment to minimize the impact of vibration. Other support types such as guides and position stops allow displacement in a specified direction or preclude unacceptable movements and interactions.

The Component Support Commodity Group includes supports for mechanical, electrical and instrumentation systems, components, and structures listed above that are in the scope of License Renewal. The group also includes supports for SSCs, which are required to restrain or prevent physical interaction with safety-related SSCs (i.e. seismic II/I).

Included in the evaluation boundary of the Component Supports Commodity Group for each of the supports indicated above are building concrete at locations of expansion and grouted anchors, grout pads for support base plates; constant and variable load spring hangers, guides, stops; sliding surfaces; support members, welds, bolted connections, support anchorage to building structure; vibration isolation elements. Snubbers are also included in the evaluation boundary of this commodity group; however, they are considered active components and are not subject to aging management review except for the end connections, which perform a passive function for structural support.

Not included in the evaluation boundary of component supports are concrete equipment supports which are evaluated separately with the License Renewal structure that contains them.

For more detailed information see UFSAR Sections 4.1.2, 4.2.6, 5.1.1.1, 5.2.1.2, 5.2.5, 5.4.4, 5.5.5, Appendix 6A.2.2.4, 8.2.2.11, 9.2.2.2, 9.8.1.5, 9.10.1.2 and 9.10.3.2.

Reason for Scope Determination

The Component Support Commodity Group meets the scoping requirements of 10 CFR54.4(a)(1) because some supports are safety-related and relied upon to maintain structural integrity during, and following design basis events. The group meets 10 CFR 54.4(a)(2) because failure of nonsafety-related supports could prevent satisfactory accomplishment of function(s) identified for 10 CFR 54.4(a)(1). It also meets 10 CFR 54.4(a)(3) because it provides structural support to systems relied upon in the safety analyses and plant evaluations to perform a function that demonstrates compliance with the Commission's regulations for Fire Protection (10 CFR 50.48), ATWS (10 CFR 50.62), Environmental qualification (10 CFR50.49), and Station Blackout (10 CFR 50.63).

The Component Support Commodity Group is not relied upon in the safety analyses or plant evaluations to perform a function that demonstrates compliance with the Commission's regulation for Pressurized Thermal Shock (10 CFR 50.61).

System Intended Functions

1. Provides structural support or restraint to SSCs in the scope of License Renewal.
   10 CFR54.4(a)(1), (a)(2), (a)(3)

UFSAR References

4.1.2
4.2.6
5.1.1.1
5.2.1.2
5.2.5
5.4.4
5.5.5
Appendix 6A.2.2.4
8.2.2.11
9.2.2.2
9.8.1.5
9.10.1.2
9.10.3.2

License Renewal Boundary Drawings

LR-1E-120-01-001

Table 2.4-17 **Component Supports Commodity Group**
Components Subject to Aging Management Review

Component Type	Intended Functions
Building concrete at locations of expansion and grouted anchors; grout pads for support base plates	Structural Support
Constant and variable load spring hangers; guides; stops	Structural Support
Sliding support surfaces	Structural Support
Support members; welds; bolted connections; support anchorage to building structure	Structural Support
Vibration isolation elements	Structural Support

The aging management review results for these components are provided in:

Table 3.5.2-17 Component Supports Commodity Group
Summary of Aging Management Evaluation

2.4.18 Substation Structures

System Purpose

The Substation Structures evaluation boundary includes the substation relay house and the structural steel support structures from the two auxiliary transformers and those associated with buses 04 and 08 including the first circuit breakers upstream of the 1A and 1B Auxiliary and Main Transformers. The Substation Structures are located east of the Turbine Building.

The Substation Structures included in the scope of License Renewal include the substation relay house, the foundations for the Auxiliary Transformers, and the foundations and miscellaneous structural steel for supporting high voltage insulators, transmission conductors (connecting auxiliary transformers to the switchyard) and switchyard bus associated with buses 04 and 08 including the first circuit breakers upstream of the 1A and 1B Auxiliary and Main Transformers. The auxiliary transformer foundations and the foundations for the miscellaneous supporting structural steel are reinforced concrete spread footings on compacted backfill.

The substation relay house is a single story above grade structure with reinforced concrete below grade walls with continuous footings founded on compacted backfill. The base slab for the building is at elevation 304'-6". The building is located east of the Turbine Building. The above grade walls are constructed of concrete block. The roof is constructed of metal decking on steel joists, which is protected with roofing material.

Each structure discussed above is in the scope of License Renewal in their entirety.

The purpose of the Substation Structures is to provide structural support and shelter and protection for electrical equipment and components required to support the regulated event for Station Blackout. Additionally, the Substation Structures support 10 CFR 54.4(a)(2) functions since the Substation Structures support equipment which provides the normal power supply to balance of plant equipment required to support 10 CFR 54.4(a)(1) functions.

Components and associated intended functions included in the evaluation boundary of the Substation Structures, which are in scope for License Renewal, are identified in the following table.

Components not included in the Substation Structures License Renewal evaluation boundary are component supports and structural commodities. Component Supports are identified and separately evaluated in the Component Supports Commodity Group section.

Structural commodities including structural bolting, piping insulation, component insulation, penetration sleeves including end caps, penetration seals, concrete anchors, concrete embedments, tube track, bus ducts, conduit, cable trays, cabinets, enclosures, racks, frames and panels for electrical equipment and instrumentation are identified and evaluated in the Structural Commodities section.

For more detailed information see UFSAR Sections 1.2.6, 8.1, 8.2, and 13.2.

Reason for Scope Determination

The Substation Structures are not in scope under 10 CFR 54.4(a)(1) because no portion of the

structures are safety-related or relied on to remain functional during and following design basis events. The Substation Structures are in scope under 10 CFR 54.4(a)(2) because failure of non-safety-related portions of the structure would prevent satisfactory accomplishment of function(s) identified for 10 CFR 54.4(a)(1). The Substation Structures meets 10 CFR 54.4(a)(3) because they provide physical support, shelter and protection for systems, structures, and components (SSCs) relied upon in the safety analyses and plant evaluations to perform a function that demonstrates compliance with the Commission's regulations for Station Blackout (10 CFR 50.63). The Substation Structures are not relied upon in any safety analyses or plant evaluations to perform a function that demonstrates compliance with the Commission's regulation for Fire Protection (10 CFR 50.48), Environmental Qualification (10 CFR 50.49), Pressurized Thermal Shock (10 CFR 50.61) and Anticipated Transient Without Scram (10 CFR 50.62).

System Intended Functions

1. Provides physical support, shelter and protection for nonsafety-related systems, structures, and components (SSCs) whose failure could prevent satisfactory accomplishment of function(s) identified for 10 CFR 54.4 (a)(1). 10 CFR 54.4(a)(2)
2. Provides physical support, shelter and protection for systems, structures, and components (SSCs) relied upon in safety analyses or plant evaluations to perform a function that demonstrates compliance with the Commission's regulations for Station Blackout (10 CFR 50.63). 10 CFR 54.4(a)(3)

UFSAR References

1.2.6
8.1
8.2
13.2

License Renewal Boundary Drawings

LR-1E-120-01-001

Table 2.4-18 **Substation Structures**
Components Subject to Aging Management Review

Component Type	Intended Functions
Concrete: Above-grade exterior	Structural Support
Concrete: Below-grade exterior	Structural Support
Concrete: Foundation	Structural Support
Concrete: Interior	Shelter, Protection
Concrete: Interior	Structural Support
Doors	Shelter, Protection
Equipment foundations	Structural Support
Masonry walls	Shelter, Protection
Masonry walls	Structural Support
Metal decking	Structural Support
Miscellaneous steel (catwalks, stairs, handrails, ladders, vents and louvers, platforms, etc.)	Structural Support
Roofing	Shelter, Protection
Steel components: All structural steel	Structural Support
Transmission towers	Structural Support

The aging management review results for these components are provided in:

Table 3.5.2-18 Substation Structures
Summary of Aging Management Evaluation

2.4.19 Turbine Building

System Purpose

The evaluation boundary for the Turbine Building includes the Turbine Building, the Heater Bay, Auxiliary Boiler enclosure and Make-up Waste Neutralizer Tank enclosure which are all classified as Class III structures and are designed to withstand the effects of normal operating loads.

The Turbine Building and Heater Bay are multi story steel framed structures founded on a reinforced concrete mat foundation at grade. There are small portions of the Turbine Building, that have reinforced concrete walls and base slabs that are below the grade elevation of 305'-0". These areas house the condensate pumps, which have a pit depth of approximately 13 feet below 305'-0" and the turbine deluge sump pumps and sump, which has a depth of approximately 21 feet below 305'-0". The Turbine Building contains the turbine generator pedestal, which is a reinforced concrete structure on a reinforced concrete mat foundation founded on granular material substrate. The floors are constructed on steel framing with either steel floor grating or concrete slabs on metal decking. Except for the reinforced concrete exterior walls along the east side of the building, the walls are constructed of steel framing and metal siding. The roof is constructed of metal decking on structural steel framing or trusses which is protected with roofing material. The Turbine Building and Heater Bay are located east of the Reactor Building and Class III portion of the Intermediate Building and north of the Control Building.

The Auxiliary Boiler enclosure is single story above grade steel structure attached to the east wall of the Turbine Building. The building foundation is a reinforced concrete mat founded on compacted backfill with the base slab at elevation 305'-0". The walls are constructed of steel framing and metal siding. The roof is constructed of metal decking on steel framing which is protected with roofing material.

The Make-up Waste Neutralizer Tank enclosure is a single story above grade steel structure attached to the southwest wall of the Turbine Building. The building foundation is a reinforced concrete mat founded on compacted backfill with the base slab at elevation 305'-0". The walls are constructed of steel framing and metal siding. The roof is constructed of metal decking on steel framing which is protected with roofing material.

The buildings included within the Turbine Building evaluation boundary house electrical and mechanical equipment required for safe operation of the plant including steam and power conversion system components and supporting systems. Major components within the buildings include the turbine generators, main condensers, condensate pumps, main steam stop and control valves, moisture separators, reactor feedwater pumps, Turbine Building and Heater Bay Heating and Ventilation System, auxiliary boilers and associated piping and make-up waste neutralizer tank. A short section of safety-related piping associated with the "A" CST is located within the Turbine Building.

Each of the above buildings included within the Turbine Building evaluation boundary are in scope for License Renewal in their entirety.

The purpose of the buildings is to provide structural support, shelter and protection for mechanical and electrical equipment required for safe operation of the plant, including safe

shutdown of the reactor. Additionally, provides structural support, shelter and protection for electrical and mechanical equipment required for Station Blackout, Fire Protection and Anticipated Transients Without Scram. The Turbine Building also provides shielding from post accident radiation exposure to allow personnel access for operating and maintaining equipment.

Components and associated intended functions included in the evaluation boundary of the Turbine Building, which are in scope for License Renewal, are identified in the following table.

Components not included in the Turbine Building License Renewal evaluation boundary are component supports, structural commodities, cranes and hoists, fire barriers and the circulating water pipe tunnels under the building. Component Supports are identified and separately evaluated in the Component Supports Commodity Group section. Structural commodities including structural bolting, piping insulation, component insulation, penetration sleeves including end caps, penetration seals, concrete anchors, concrete embedments, tube track, bus ducts, conduit, cable trays, cabinets, enclosures, racks, frames and panels for electrical equipment and instrumentation are identified and evaluated in the Structural Commodities section. Cranes and hoists are evaluated with the Cranes and Hoists License Renewal system. Fire barriers are evaluated with the License Renewal Fire Protection system. The circulating water pipe tunnels are evaluated with the Circulating Water System.

For more detailed information see UFSAR Sections 2.7.5, 5.1.1.3, 5.4.3.2.5, 9.2, 9.6.2.2, 9.10.1.2, 10.3.4.2, 10.4.4.2, 10.6, 11.3.1, 11A.6, 14.2.2.9, Appendix 14A.3.3, 14A.4, 14A.7.1.2.1.

Reason for Scope Determination

The Turbine Building is not in scope under 10 CFR 54.4(a)(1) because no portions of the structure are safety-related or relied on to remain functional during and following design basis events. It meets 10 CFR 54.4(a)(2) because the building is nonsafety related and provides physical support and shelter for safety-related structures, and components (SSCs) and nonsafety-related SSCs whose failure could prevent satisfactory accomplishment of function(s) identified for 10 CFR 54.4(a)(1).

It also meets 10 CFR 54.4(a)(3) because it provides physical support, shelter and protection for systems, structures, and components (SSCs) relied upon in the safety analyses or plant evaluations to perform a function that demonstrates compliance with the Commission's regulations for Fire Protection (10 CFR 50.48), Anticipated Transient without Scram (10 CFR 50.62) and Station Blackout (10 CFR 50.63).

The Turbine Building is not relied upon in the safety analyses or plant evaluations to perform a function that demonstrates compliance with the Commission's regulations for Environmental Qualification (10 CFR 50.49) or Pressurized Thermal Shock (10 CFR 50.61).

System Intended Functions

1. Provides physical support, shelter and protection for safety related systems, structures, and components. 10 CFR 54.4(a)(2)
2. Provides physical support, shelter and protection for nonsafety related systems, structures, and components whose failure could prevent satisfactory accomplishment of function(s) identified for 10 CFR 54.4(a)(1). 10 CFR 54.4(a)(2)
3. Provides physical support, shelter and protection for systems, structures, and components

relied upon in safety analyses or plant evaluations to perform a function that demonstrates compliance with the commission's regulations for Fire Protection (10 CFR 50.48). 10 CFR 54.4(a)(3)
4. Provides physical support and shelter and protection for systems, structures, and components relied upon in safety analyses or plant evaluations to perform a function that demonstrates compliance with the Commission's regulations for Anticipated Transient without Scram (10 CFR 50.62) 10 CFR 54.4(a)(3)
5. Provides physical support, shelter and protection for systems, structures, and components relied upon in safety analyses or plant evaluations to perform a function that demonstrates compliance with the commission's regulations for Station Blackout (10 CFR 50.63). 10 CFR 54.4(a)(3)

UFSAR References

2.7.5
5.1.1.3
5.4.3.2.5
9.2
9.6.2.2
9.10.1.2
10.3.4.2
10.4.4.2
10.6
11.3.1
11A.6
14.2.2.9
14A.3.3
14A.4
14A.7.1.2.1

License Renewal Boundary Drawings

LR-1E-120-01-001

Table 2.4-19 **Turbine Building**
Components Subject to Aging Management Review

Component Type	Intended Functions
Concrete: Above-grade exterior	Shelter, Protection
Concrete: Above-grade exterior	Structural Support
Concrete: Below-grade exterior	Shelter, Protection
Concrete: Below-grade exterior	Structural Support
Concrete: Foundation	Structural Support
Concrete: Interior	Pressure Boundary
Concrete: Interior	Shelter, Protection
Concrete: Interior	Structural Support
Equipment foundations	Structural Support
Masonry walls	Structural Support
Metal decking	Structural Support
Metal siding	Shelter, Protection
Miscellaneous steel (catwalks, stairs, handrails, ladders, vents and louvers, platforms, etc.)	Structural Support
Roofing	Shelter, Protection
Seals, gaskets, and moisture barriers (caulking, flashing and other sealants)	Shelter, Protection
Steel components: All structural steel	Structural Support

The aging management review results for these components are provided in:

Table 3.5.2-19 Turbine Building
Summary of Aging Management Evaluation

2.4.20 UPS Diesel Building

System Purpose

The UPS Diesel Building is a single story above grade steel framed structure with reinforced concrete below grade walls on spread footings founded on compacted backfill. The base slab for the building is at elevation 305'-0". The building is adjacent to the north wall of the Service Building. The walls are constructed of metal siding. The roof is constructed of metal decking on structural steel framing or trusses, which is protected with roofing material.

The building houses the security inverter which is required for support of ATWS, 10 CFR 54.4(A)(3). The building also houses the UPS Diesel Generator and associated electrical and mechanical equipment. The entire structure is in the scope of License Renewal.

The purpose of the building is to provide structural support, shelter and protection for electrical equipment required for ATWS. Additionally, the structure provides structural support, shelter and protection for electrical equipment required for normal plant operations and for electrical and mechanical equipment required to provide back-up power for security.

Components and associated intended functions included in the evaluation boundary of the UPS Diesel Building, which are in scope for License Renewal, are identified in the following table.

Components not included in the UPS Diesel Building License Renewal evaluation boundary are component supports, structural commodities and fire barriers. Component Supports are identified and separately evaluated in the Component Supports Commodity Group section.

Structural commodities including structural bolting, piping insulation, component insulation, penetration sleeves including end caps, penetration seals, concrete anchors, concrete embedments, tube track, bus ducts, conduit, cable trays, cabinets, enclosures, racks, frames and panels for electrical equipment and instrumentation are identified and evaluated in the Structural Commodities section. Fire barriers are evaluated with the License Renewal Fire Protection System.

The UPS Diesel Building is not referenced in the UFSAR.

Reason for Scope Determination

The UPS Diesel Building is not in scope under 10 CFR 54.4(a)(1) because no portions of the structure are safety-related or relied on to remain functional during and following design basis events. The UPS Diesel Building is not in scope under 10 CFR 54.4(a)(2) because failure of non-safety-related portions of the structure would not prevent satisfactory accomplishment of function(s) identified for 10 CFR 54.4(a)(1). The UPS Diesel Building meets 10 CFR 54.4(a)(3) because it provides physical support, shelter and protection for systems, structures, and components (SSCs) relied upon in the safety analyses and plant evaluations to perform a function that demonstrates compliance with the Commission's regulations for Anticipated Transient Without Scram (10 CFR 50.62). The building is not relied upon in any safety analyses or plant evaluations to perform a function that demonstrates compliance with the Commission's regulation for Fire Protection (10 CFR 50.48), Environmental Qualification (10 CFR 50.49), Pressurized Thermal Shock (10 CFR 50.61) and Station Blackout (10 CFR 50.63).

System Intended Functions

1. Provides physical support, shelter and protection for systems, structures, and components (SSCs) relied upon in safety analyses or plant evaluations to perform a function that demonstrates compliance with the Commission's regulations for Anticipated Transient without Scram (10 CFR 50.62). 10 CFR 54.4(a)(3)

UFSAR References

None

License Renewal Boundary Drawings

LR-1E-120-01-001

Table 2.4-20 **UPS Diesel Building**
Components Subject to Aging Management Review

Component Type	Intended Functions
Concrete: Below-grade exterior	Structural Support
Concrete: Foundation	Structural Support
Concrete: Interior	Shelter, Protection
Concrete: Interior	Structural Support
Doors	Shelter, Protection
Equipment foundations	Structural Support
Masonry walls: Interior	Structural Support
Metal decking	Structural Support
Metal siding	Shelter, Protection
Roofing	Shelter, Protection
Seals, gaskets, and moisture barriers (caulking, flashing and other sealants)	Shelter, Protection
Steel components: All structural steel	Structural Support

The aging management review results for these components are provided in:

Table 3.5.2-20 UPS Diesel Building
Summary of Aging Management Evaluation

2.5 SCOPING AND SCREENING RESULTS: ELECTRICAL SYSTEMS/COMMODITY GROUPS

The determination of electrical systems that fall within the scope of License Renewal is made through the application of the process described in Section 2.1. The results of the electrical systems scoping review are contained in Section 2.2.

Subsection 2.1.6.1 provides the screening methodology for determining which component groups within the scope of 10 CFR 54.4 meet the requirements contained in 10 CFR 54.21(a)(1). The component groups that meet those screening requirements are identified in this section. These identified component groups consequently require an aging management review.

As described in Subsection 2.1.6.1, the screening for electrical components was performed on a commodity group basis for the in scope electrical systems as well as the electrical component types associated with in scope mechanical systems listed in Table 2.2-1.

Components which support or interface with electrical components, for example, cable trays, conduits, instrument racks, panels and enclosures, are assessed as part of the Structural Component Support Commodity Group in Section 2.4.

2.5.1 ELECTRICAL SYSTEMS

This section provides a brief description of the TMI-1 systems determined to be in the scope of license renewal. Each description includes the system purpose, reason for scope determination, intended functions, UFSAR references and identification of applicable license renewal boundary drawings. The following systems are addressed in this section:

- 120 V Vital Power System (Section 2.5.1.1)
- 250/125 VDC System (Section 2.5.1.2)
- 4160 V Auxiliary System (Section 2.5.1.3)
- 480 V Auxiliary System (Section 2.5.1.4)
- 6900 V Auxiliary System (Section 2.5.1.5)
- Communication System (Section 2.5.1.6)
- Digital Turbine Control System (Section 2.5.1.7)
- Electrical Heat Tracing System (Section 2.5.1.8)
- Engineered Safeguards Actuation System (ESAS) (Section 2.5.1.9)
- Heat Sink Protection System (Section 2.5.1.10)
- Integrated Control System (Section 2.5.1.11)
- Lighting System (Section 2.5.1.12)
- Main and Auxiliary Transformers (Section 2.5.1.13)
- Non-Nuclear Instrumentation and Monitoring System (Section 2.5.1.14)
- Nuclear Instrumentation and Incore Monitoring System (Section 2.5.1.15)
- Reactor Protection and Control Rod Drive System (Section 2.5.1.16)
- Remote Shutdown Panel (Section 2.5.1.17)
- Substation (Section 2.5.1.18)

2.5.1.1 120 V Vital Power System

System Purpose

The 120 V Vital Power System is an electrical system designed to distribute power for both engineered safeguards and balance of plant electrical loads. The 120 V Vital Power System consists of the following plant systems: 120 Volt AC Vital Power System, the 120 Volt AC Regulated Power System, 120/208 Volt AC Power System, and the electrical distribution portions of the Uninterrupted Power Supply (UPS) Diesel. The 120 V Vital Power System is in scope for License Renewal.

The 120 Volt AC Vital Power System is a reliable source for essential power, instrumentation, and control loads. The 120 Volt AC Vital Power System is designed to Class 1E standards in that there exists sufficient physical and electrical separation to ensure performance of required functions. The system consists of four bus sections, each supplied from a static inverter. The static inverters are normally supplied from the 480 V Auxiliary System through rectifiers with an uninterrupted transfer to a 125 VDC source on loss of the normal supply. Two additional inverters can be connected to the vital buses to provide qualified backup power and to facilitate maintenance of the inverters. Static switches with automatic synchronization capability are provided and utilized to feed the Integrated Control System, Non-Nuclear Instrumentation, and Plant Process Computer multiplexers from a regulated AC bus in the event of the failure of the normal supply inverter.

The 120 Volt AC Regulated Power System supplies instrumentation, control, and power loads, which require regulated 120 VAC power. This system provides a non-qualified backup power source to the 120 VAC vital buses.

The 120/208 Volt AC Power System supplies instrumentation, control, and power loads requiring unregulated 120/208 VAC power.

The Uninterrupted Power Supply (UPS) Diesel primarily provides a back-up source of power to critical plant security loads. This scoping document addresses the electrical portions of the Uninterrupted Power Supply (UPS) Diesel, including items operating at 480 VAC and 125 VDC. Mechanical portions of this system are addressed in the scoping document for the Station Blackout and UPS Diesel Generator Systems. The electrical portions of the system include a 100KW diesel generator, a 480 VAC auto transfer switch, 480 VAC distribution panels, 480/120 VAC transformers, a 125 VDC battery, a battery charger, an inverter and 120 VAC distribution panels. The inverter that is part of this system is used to provide a diverse power source for Turbine Trip on Feed Water Pump Trip for ATWS.

The system accomplishes its functions using 120 VAC panels, circuit breakers, 480/120 VAC transformers, regulating transformers, static inverters, rectifiers, relays, static switches, control switches, Kirk Key interlocks, meters, fuses, receptacles, cable and cable connections, diesel generator, 480 VAC distribution panels, switches, indication, inverters, batteries, battery chargers, and mechanical components for the UPS diesel, as is discussed in the scoping document for the Station Blackout Diesel Generator. The components of the 120 V Vital Power Systems are located throughout the plant in relatively close proximity to load devices.

Reason for Scope Determination

The 120 V Vital Power System meets 10 CFR 54.4(a)(1) because it is a safety-related system that is relied upon to remain functional during and following design basis events. The 120 V Vital Power System meets 10 CFR 54.4(a)(2) because failure of nonsafety-related portions of the system could prevent satisfactory accomplishment of function(s) identified for 10 CFR 54.4(a)(1). The 120 V Vital Power System meets 10 CFR 54.4(a)(3) because it is relied upon in the safety analyses or plant evaluations to perform a function that demonstrates compliance with the Commission's regulations for Fire Protection (10 CFR 50.48), Anticipated Transients Without Scram (10 CFR 50.62), and Station Blackout (10 CFR 50.63). The 120 V Vital Power System is not relied upon in any safety analyses or plant evaluations to perform a function that demonstrates compliance with the Commission's regulation for Environmental Qualification (10 CFR 50.49) and Pressurized Thermal Shock (10 CFR 50.61).

System Intended Functions

1. Provide power to safety-related components. The 120 V Vital Power System provides safety-related power to equipment performing (a)(1) intended functions. 10 CFR 54.4(a)(1)
2. Resist non-safety related SSC failure that could prevent satisfactory accomplishment of a safety-related function. The nonsafety-related portions of the 120 V Vital Power system provides power to equipment credited to mitigate the steam generator tube accident and the rod ejection accident. 10 CFR 54.4(a)(2)
3. Relied upon in safety analyses or plant evaluations to perform a function that demonstrates compliance with the Commission's regulations for Fire Protection (10 CFR 50.48). In support of fire safe shutdown, the 120 V Vital Power System provides power to equipment credited for post fire safe shutdown. 10 CFR 54.4(a)(3)
4. Relied upon in safety analyses or plant evaluations to perform a function that demonstrates compliance with the Commission's regulations for Anticipated Transients Without Scram (10 CFR 50.62). The 120 V Vital Power System provides power to equipment credited in response to an Anticipated Transients Without Scram. The Uninterrupted Power Supply Diesel provides the alternative power feed to the Turbine Trip on Feed Water Pump Trip, TTFWPT. 10 CFR 54.4(a)(3)
5. Relied upon in safety analyses or plant evaluations to perform a function that demonstrates compliance with the Commission's regulations for Station Blackout (10 CFR 50.63). The 120 V Vital Power System distributes power from the Alternate AC power source to operate systems credited in the event of a Station Blackout. The 120 V Vital Power System is also energized as part of the restorative actions for a Station Blackout. 10 CFR 54.4(a)(3)

UFSAR References

8.2.2.7
8.2.2.8
8.2.2.9

License Renewal Boundary Drawings

None

2.5.1.2 250/125 VDC System

System Purpose

The 250/125 VDC System is an electrical system designed to distribute power for both engineered safeguards and balance of plant electrical loads. The 250/125 VDC System is in scope for License Renewal.

The 250/125 VDC System provides a source of reliable continuous power for DC pump motors, emergency control tower lighting, inverters that supply controls and instrumentation and diesel field flash power. The capacity of each of the two redundant batteries is sufficient to feed its connected essential load for 2 hours continuously.

The 250/125 VDC System consists of two isolated bus sections, each supplied by a battery and battery chargers. The system is an ungrounded DC system. The batteries are connected to the main DC distribution panels via disconnect switches. Each battery charger has its own input and output protective circuit breakers. Each battery charger is connected to its associated distribution bus through fused disconnect switches.

The 250/125 VDC System is designed to Class 1E standards in that there exists sufficient physical and electrical separation to ensure performance of required functions. Under plant operating conditions there are no DC ties between redundant engineered safeguards loads, such as switchgear and motors. No single failure of any DC component can adversely affect the operation of the 100% redundant diesel generators.

A spare 125 VDC battery charger is provided for each battery for backup. The output of the spare battery chargers may be fed to either half of the corresponding 250/125 VDC System. Provision has been made for manual cross-connection of the two systems. By this means, all battery chargers would be available for feeding the essential loads.

The system accomplishes its functions using batteries, battery chargers, distribution panels, breakers, fuses, relays, switches, ammeters, ground detectors, cable, and cable connectors. This scoping document is limited to the main station batteries and associated equipment. The scoping of intended functions for other system specific batteries and associated equipment is evaluated as part of the scoping evaluations for those systems.

Reason for Scope Determination

The 250/125 VDC System meets 10 CFR 54.4(a)(1) because it is a safety-related system that is relied upon to remain functional during and following design basis events. The 250/125 VDC System meets 10 CFR 54.4(a)(2) because failure of nonsafety-related portions of the system could prevent satisfactory accomplishment of function(s) identified for 10 CFR 54.4(a)(1). The 250/125 VDC System meets 10 CFR 54.4(a)(3) because it is relied upon in the safety analyses or plant evaluations to perform a function that demonstrates compliance with the Commission's regulations for Fire Protection (10 CFR 50.48), and Station Blackout (10 CFR 50.63). The 250/120 VDC System is not relied upon in any safety analyses or plant evaluations to perform a function that demonstrates compliance with the Commission's regulation for Environmental Qualification (10 CFR 50.49), Pressurized Thermal Shock (10 CFR 50.61), and Anticipated Transients Without Scram (10 CFR 50.62).

System Intended Functions

1. Provide power to safety-related components. The 250/125 VDC System provides safety-related power to equipment performing (a)(1) intended functions. 10 CFR 54.4(a)(1)
2. Resist non-safety related SSC failure that could prevent satisfactory accomplishment of a safety-related function. The nonsafety-related portions of the 250/125 VDC System provides power to equipment credited to mitigate the steam generator tube accident and the rod ejection accident. 10 CFR 54.4(a)(2)
3. Relied upon in safety analyses or plant evaluations to perform a function that demonstrates compliance with the commission's regulations for Fire Protection (10 CFR 50.48). In support of fire safe shutdown, the 250/125 VDC System provides power to equipment credited for post fire safe shutdown. 10 CFR 54.4(a)(3)
4. Relied upon in safety analyses or plant evaluations to perform a function that demonstrates compliance with the commission's regulations for Station Blackout (10 CFR 50.63). The 250/125 VDC System distributes power to loads that are credited in the event of a Station Blackout. 10 CFR 54.4(a)(3)

UFSAR References

8.2.2.6

License Renewal Boundary Drawings

None

2.5.1.3 4160 V Auxiliary System

System Purpose

The 4160 V Auxiliary System is an electrical system designed to distribute power for both engineered safeguards and balance of plant electrical loads. The 4160 V Auxiliary System is in scope for License Renewal.

The 4160 V Auxiliary System has 5 bus sections. Two buses provide power to redundant Class 1E engineered safeguards functions. Three buses provide power to balance of plant functions. The system accomplishes its functions using metal clad switchgear, metal enclosed bus, control and protective relays, current transformers, voltage transformers, meters, control switches, fuses, cable and cable connections. The two redundant Class 1E 4160 V Engineered Safeguards Buses are located in separate rooms on the 338' elevation of the Control Tower. The three 4160 V Turbine Plant Buses are located on the 322' elevation in the Turbine Building Switchgear Room. The 4160 V Engineered Safeguards Buses feed safety-related motors, e.g., Emergency Feedwater pump motors, and load centers. The 4160 V Turbine Plant Buses feed turbine generator and other nonsafety-related loads.

During normal operation one 4160 V Engineered Safeguards Bus is fed from each Auxiliary Transformer. The Auxiliary Transformers receive their power from two different 230 kV buses at the Substation. The Auxiliary Transformers also provide offsite power to the 4160 V Turbine Plant and 6900 V Auxiliary System Buses. There is no fast automatic transfer of the Class 1E buses. Transfer of either Class 1E bus to the alternate preferred source is manual. Operation with both 4160 V Engineered Safeguards Buses on a single Auxiliary Transformer is administratively limited. Transfers of Engineered Safeguards Buses to the on-site Emergency Diesel Generator power sources are manual if bus voltage has not failed and automatic if bus voltage fails. Load tap changers are provided on the 4 kV windings of the Auxiliary Transformers to maintain engineered safeguards voltages within a narrow band for variations in grid voltage.

The Station Blackout Diesel Generator can be loaded onto either of the Class 1E 4160 V Engineered Safeguards Buses, via manual start and load, in the event of a Station Blackout. The Station Blackout Diesel Generator can be paralleled to a single 4160 V Turbine Plant Bus to support testing.

Reason for Scope Determination

The 4160 V Auxiliary System meets 10 CFR 54.4(a)(1) because it is a safety-related system that is relied upon to remain functional during and following design basis events. The 4160 V Auxiliary System meets 10 CFR 54.4(a)(2) because failure of nonsafety-related portions of the system could prevent satisfactory accomplishment of function(s) identified for 10 CFR 54.4(a)(1). The 4160 V Auxiliary System meets 10 CFR 54.4(a)(3) because it is relied upon in the safety analyses or plant evaluations to perform a function that demonstrates compliance with the Commission's regulations for Fire Protection (10 CFR 50.48) and Station Blackout (10 CFR 50.63). The 4160 V Auxiliary System is not relied upon in any safety analyses or plant evaluations to perform a function that demonstrates compliance with the Commission's regulation for Environmental Qualification (10 CFR 50.49), Pressurized Thermal Shock (10 CFR 50.61), and Anticipated Transients Without Scram (10 CFR 50.62).

System Intended Functions

1. Provide power to safety-related components. The 4160 V Auxiliary System provides safety-related power to equipment performing (a)(1) intended functions. 10 CFR 54.4(a)(1)
2. Resist non-safety related SSC failure that could prevent satisfactory accomplishment of a safety-related function. The nonsafety-related portions 4160 V Auxiliary System provides power to equipment credited to mitigate the steam generator tube accident and the rod ejection accident. 10 CFR 54.4(a)(2)
3. Relied upon in safety analyses or plant evaluations to perform a function that demonstrates compliance with the Commission's regulations for Fire Protection (10 CFR 50.48). In support of fire safe shutdown, the 4160 V Auxiliary System provides power to equipment credited for post fire safe shutdown, e.g., 4160 V pump motors for Emergency Feedwater, Make Up, and Decay Heat; and 480 V switchgear. 10 CFR 54.4(a)(3)
4. Relied upon in safety analyses or plant evaluations to perform a function that demonstrates compliance with the Commission's regulations for Station Blackout (10 CFR 50.63). The 4160 V Auxiliary System distributes power from the Station Blackout Alternate AC power source. The Alternate AC power source is to be available to Station Blackout loads within 10 minutes. It is used throughout the Station Blackout coping duration to operate systems necessary to bring and maintain the plant in a safe shutdown condition. The 4160 V Auxiliary System is also energized as part of the restorative actions for a Station Blackout. 10 CFR 54.4(a)(3)

UFSAR References

8.2.2.4
8.2.2.10
8.5

License Renewal Boundary Drawings

None

2.5.1.4 480 V Auxiliary System

System Purpose

The 480 V Auxiliary System is an electrical system designed to distribute power for both engineered safeguards and balance of plant electrical loads. The 480 V Auxiliary System, exclusive of balance of plant heating and ventilating buses, has ten single-ended unit substations, each consisting of a 4160-480 V transformer and its associated 480 V switchgear. Seven similar unit substations have been provided for plant heating and ventilating.

Four of the unit substations and their associated 480 V motor control centers makeup the two redundant trains of the Class 1E portion of the 480 V Auxiliary System. The Class 1E unit substations are fed from their associated 4160 V Engineered Safeguards bus. Transfer of power sources for the 480 V Auxiliary System follows the transfer of power sources as designed for the 4160 V Auxiliary System. Selected loads connected to the Class 1E 480 V unit substations and associated motor control centers are automatically tripped on receipt of an engineered safeguards signal. Motor control centers feeding engineered safeguards equipment have been arranged so that engineered safeguards channels, power systems, and redundant equipment are fed and controlled with no cross connections of any kind. No common failure mode exists for this system.

The Class 1E portion of this system also provides redundant emergency power for 107 kW of pressurizer heaters to maintain natural circulation conditions in the event of a loss of offsite power.

Twelve unit substations and their associated motor control centers provide power to balance of plant functions.

The Station Blackout Unit Substation provides power directly from the Station Blackout Diesel Generator to Station Blackout loads.

The 480 V Auxiliary System consists of the following plant systems: 480 V Switchgear, 480 Volt Auxiliary System, and Pressurizer Heater Emergency Power. The system accomplishes its functions using 4160/480 V unit substations, 480 V motor control centers, metal enclosed bus, control and protective relays, current transformers, voltage transformers, meters, control switches, fuses, cable and cable connections. The components of the 480 V Auxiliary System are located throughout the plant in relatively close proximity to load devices.

Reason for Scope Determination

The 480 V Auxiliary System meets 10 CFR 54.4(a)(1) because it is a safety-related system that is relied upon to remain functional during and following design basis events. The 480 V Auxiliary System meets 10 CFR 54.4(a)(2) because failure of nonsafety-related portions of the system could prevent satisfactory accomplishment of function(s) identified for 10 CFR 54.4(a)(1). The 480 V Auxiliary System meets 10 CFR 54.4(a)(3) because it is relied upon in the safety analyses or plant evaluations to perform a function that demonstrates compliance with the Commission's regulations for Fire Protection (10 CFR 50.48), Anticipated Transients Without Scram (10 CFR 50.62), and Station Blackout (10 CFR 50.63). The 480 V Auxiliary System is not relied upon in any safety analyses or plant evaluations to perform a function that demonstrates compliance with the Commission's regulation for Environmental Qualification (10

CFR 50.49) and Pressurized Thermal Shock (10 CFR 50.61).

System Intended Functions

1. Provide power to safety-related components. The 480 V Auxiliary System provides safety-related power to equipment performing (a)(1) intended functions. 10 CFR 54.4 (a)(1)
2. Resist non-safety related SSC failure that could prevent satisfactory accomplishment of a safety-related function. The nonsafety-related portions of the 480 V Auxiliary System provides power to equipment credited to mitigate the steam generator tube accident and the rod ejection accident. 10 CFR 54.4(a)(2)
3. Relied upon in safety analyses or plant evaluations to perform a function that demonstrates compliance with the Commission's regulations for Fire Protection (10 CFR 50.48). In support of fire safe shutdown, the 480 V Auxiliary System provides power from 4160/480 V unit substations and associated motor control centers that provide power to equipment credited for post fire safe shutdown. 10 CFR 54.4(a)(3)
4. Relied upon in safety analyses or plant evaluations to perform a function that demonstrates compliance with the Commission's regulations for Anticipated Transients Without Scram (10 CFR 50.62). The 480 V Auxiliary System provides an alternate means to remove power from the Rod Drive Control System. 10 CFR 54.4(a)(3)
5. Relied upon in safety analyses or plant evaluations to perform a function that demonstrates compliance with the Commission's regulations for Station Blackout (10 CFR 50.63). The 480 V Auxiliary System distributes power from the Alternate AC power source to operate systems credited in the event of a Station Blackout. 10 CFR 54.4(a)(3)

UFSAR References

8.2.2.5
8.2.2.10
4.2.4.4

License Renewal Boundary Drawings

None

2.5.1.5 6900 V Auxiliary System

System Purpose

The 6900 V Auxiliary System is an electrical system designed solely to provide power to the four 9000 hp Reactor Coolant Pump Motors. The system accomplishes its functions using metal clad switchgear, metal enclosed bus, control and protective relays, current transformers, voltage transformers, meters, control switches, fuses, cable and cable connections. This system is arranged into two bus sections. Both 6900 V Reactor Plant buses are located on the 322' elevation in the Turbine Building Switchgear Room. Each 6900 V bus feeds two Reactor Coolant Pump Motors. During normal operation one bus is fed from each Auxiliary Transformer. The Auxiliary Transformers receive their power from two different 230 kV buses at the Substation. The Auxiliary Transformers also provide offsite power to the 4160 V Turbine Plant and Engineered Safeguards buses. Either Auxiliary Transformer is capable of feeding both 6900 V buses. Automatic fast bus transfer will take place in either direction, by relay action, if a source bus or transformer failure occurs. Automatic and manual transfer capabilities exist to provide diversity of source power, to respond to failures, and to allow for testing and maintenance.

Reason for Scope Determination

The 6900 V Auxiliary System is not in scope under 10 CFR 54.4(a)(1) because no portions of the system are safety-related or relied upon to remain functional during and following design basis events. The 6900 V Auxiliary System is not in scope under 10 CFR 54.4(a)(2) because failure of nonsafety-related portions of the system would not prevent satisfactory accomplishment of function(s) identified for 10 CFR 54.4(a)(1). The 6900 V Auxiliary System meets 10 CFR 54.4(a)(3) because it is relied upon in the safety analyses or plant evaluations to perform a function that demonstrates compliance with the Commission's regulations for Fire Protection (10 CFR 50.48) and Station Blackout (10 CFR 50.63). The 6900 V Auxiliary System is not relied upon in any safety analyses or plant evaluations to perform a function that demonstrates compliance with the Commission's regulation for Environmental Qualification (10 CFR 50.49), Pressurized Thermal Shock (10 CFR 50.61), and Anticipated Transients Without Scram (10 CFR 50.62).

System Intended Functions

1. Relied upon in safety analyses or plant evaluations to perform a function that demonstrates compliance with the Commission's regulations for Fire Protection (10 CFR 50.48). In support of fire safe shutdown, the Reactor Coolant Pumps are required to be tripped to support natural circulation. This is accomplished by tripping of the 6900 V switchgear circuit breakers. 10 CFR 54.4(a)(3)
2. Relied upon in safety analyses or plant evaluations to perform a function that demonstrates compliance with the Commission's regulations for Station Blackout (10 CFR 50.63). The 6900 V Auxiliary System is re-energized as part of the restorative actions for a Station Blackout. 10 CFR 54.4(a)(3)

UFSAR References

8.2.2.3

License Renewal Boundary Drawings

None

2.5.1.6 Communication System

System Purpose

The Communication System is a normally operating electrical system. The purpose of the Communication System is to provide varied and redundant mechanisms to communicate throughout the plant under normal and emergency conditions. The Communication System consists of the following plant systems: Inplant Communications System, Two–Way Radio System and Telephone System. The Inplant Communications System and the Two–Way Radio System perform License Renewal intended functions. The Communication System is in scope for License Renewal.

The Inplant Communication System has four subsystems: the Main Plant Communications System, the Redundant Communications System, the Maintenance and Instrumentation (M&I) Communications System and the Emergency Feedwater (EFW) Sound Powered Phone System.

The Main Plant Communications System is the largest communications system in the plant and consists of handsets and loudspeakers installed throughout the plant. The equipment is painted gray and is used for normal plant operations communications, and for broadcast, over the page channel, of emergency announcements. The Main Plant Communications System has one page and three party channels.

Except for the number of channels and color, the hardware for the Redundant Communications System is the same as that of the Main Plant Communications System. The Redundant Communications System red phones are only located in a few areas of the plant. The phone locations have broad but scattered plant coverage, and the system is used as a backup when the Main Plant Communication System is lost.

The Maintenance and Instrumentation (M&I) Communications System was installed as dedicated lines to support maintenance and refueling activities. The system also serves as communications channels for plant shutdown from outside the Control Room and for Emergency Plan usage.

The EFW Sound Powered System is for emergency use only and provides communications between the Control Room, Remote Shutdown Panels, and the Intermediate Building, Emergency Feedwater Control Valve Area during Appendix R safe shutdown operations. Headsets (no external power required) are available at each location.

A multi tone generator is connected to the Main Plant Communications System during certain plant emergencies. The generator is activated by pushbuttons in the Control Room for fire, station emergency, or Reactor Building evacuation, and automatically for Reactor Building evacuation with a count rate of 100 CPS or greater from the source range nuclear instrumentation. Connected to the Reactor Building Evacuation and Radiation Emergency alarms are networks that activate flashing red lights and boost area speaker volume in high noise areas of the plant.

The Operations High Band Radio System (Walkie Talkies) consists of a number of portable radio units and a base repeater station.

The Inplant Telephone System consists of numerous analog or digital telephone stations located throughout the plant and site office buildings. These telephone stations function through a Private Business Exchange (PBX) located in the North Office Building (NOB).

The system accomplishes its functions using inverters, switches, headsets, amplifiers, handsets, terminals, jacks, speakers, radios, lights, sirens, repeaters, batteries, cables and connections.

Reason for Scope Determination

The Communication System does not meet 10 CFR 54.4(a)(1) because it is not a safety-related system that is relied upon to remain functional during and following design basis events. The Communication System is not in scope under 10 CFR 54.4(a)(2) because failure of nonsafety-related portions of the system would not prevent satisfactory accomplishment of function(s) identified for 10 CFR 54.4(a)(1). The Communication System does meet 10 CFR 54.4(a)(3) because it is relied upon in the safety analyses or plant evaluations to perform a function that demonstrates compliance with the Commission's regulations for Fire Protection (10 CFR 50.48). The Communication System is not relied upon in any safety analyses or plant evaluations to perform a function that demonstrates compliance with the Commission's regulation for Environmental Qualification (10 CFR 50.49), Pressurized Thermal Shock (10 CFR 50.61), Anticpated Transients Without Scram (10 CFR 50.62), and Station Blackout (10 CFR 50.63).

System Intended Functions

1. Relied upon in safety analyses or plant evaluations to perform a function that demonstrates compliance with the Commission's regulations for Fire Protection. (10 CFR 50.48) The Communication System provides the ability for two-way voice communication, which is vital to safe shutdown and emergency response in the event of fire. 10 CFR 54.4 (a)(3)

UFSAR References

7.4.4
7.4.6
Table 7.4-1

License Renewal Boundary Drawings

None

2.5.1.7 Digital Turbine Control System

System Purpose

The Digital Turbine Control System is a normally operating electrical system that provides control signals for Main Turbine control. The Digital Turbine Control System is in scope for License Renewal.

The purpose of the Digital Turbine Control System is to provide turbine control and protection signals to the EHC (Electro Hydraulic Control System) to perform many functions such as warm and roll of the Main Turbine, control of speed prior to synchronization with the grid and provide for on line stroke testing of all valves. The Digital Turbine Control System can control load independent of or coordinated with the Integrated Control System. The Digital Turbine Control System generates protective turbine generator trip signals for various abnormal process conditions, one of which is to trip the turbine on a loss of both feedwater pumps. The Digital Turbine Control System provides a runback signal on loss of adequate stator cooling.

The Digital Turbine Control System actuates the Main Turbine Emergency Trip System (ETS), which is a subsystem of EHC. Digital Turbine Control System triples critical instrument signals to create two out of three logic for system reliability. The ATWS Mitigation System Actuation Circuitry (AMSAC) functions to actuate the Emergency Feedwater System (EFW) and to trip the Main Turbine via the EHC, on ATWS transients.

The system accomplishes its functions using 120 VAC panels, circuit breakers, digital input output boards, 24 VDC power supplies, 120 VAC to 125 VDC converter boards, rectifiers, relays, static switches, control switches, meters, fuses, receptacles, cable and cable connections, valve position indicators, transmitters, speed pickup devices, PC's, CRT's, memory cards and computer peripherals. The components of the Digital Turbine Control System are located throughout the plant with most of the components located near or in the Control Room or Main Turbine.

Reason for Scope Determination

The Digital Turbine Control System does not meet 10 CFR 54.4(a)(1) because it is not a safety-related system that is relied upon to remain functional during and following design basis events. The Digital Turbine Control System is not in scope under 10 CFR 54.4(a)(2) because failure of nonsafety-related portions of the system would not prevent satisfactory accomplishment of function(s) identified for 10 CFR 54.4(a)(1). The Digital Turbine Control System does meet 10 CFR 54.4(a)(3) because it is relied upon in the safety analyses or plant evaluations to perform a function that demonstrates compliance with the Commission's regulations for Anticipated Transients Without Scram (10 CFR 50.62). The Digital Turbine Control System is not relied upon in any safety analyses or plant evaluations to perform a function that demonstrates compliance with the Commission's regulation for Fire Protection (10 CFR 50.48), Environmental Qualification (10 CFR 50.49), Pressurized Thermal Shock (10 CFR 50.61) and Station Blackout (10 CFR 50.63).

System Intended Functions

1. Relied upon in safety analyses or plant evaluations to perform a function that demonstrates compliance with the Commission's regulations for Anticipated Transients Without Scram

(10CFR50.62). The DTCS trips the Main Turbine if both feedwater pumps trip. 10 CFR 54.4 (a)(3)

UFSAR References

7.1.5.
14.1.2.11

License Renewal Boundary Drawings

None

2.5.1.8 Electrical Heat Tracing System

System Purpose

The Electrical Heat Tracing System is a normally energized electrical system designed to prevent freezing, condensation buildup or boron precipitation. Heat tracing is used throughout the plant on many systems. However, portions of the Electrical Heat Tracing System are not required to perform intended functions and are not in scope. The Electrical Heat Tracing System does provide intended functions for the Decay Heat Removal System, the Reactor Building Spray System and the Hydrogen Monitoring System. The Electrical Heat Tracing System is in scope for License Renewal.

In the Decay Heat Removal System, the heat tracing works in conjunction with immersion heaters to maintain the Borated Water Storage Tank (BWST) inventory above 45 degrees F to prevent freezing. The heat trace for the tank is not considered to have a safety-related function; the safety related heat source is the internal tank heater. The heat trace reduces the number of times the heater cycles on and off. The heat trace on the piping connected to the tank, including that associated with level indication is safety-related because there is no other heat source. The BWST level instruments are heat traced to maintain accurate level indication to ensure proper BWST level for accident conditions.

In the Reactor Building Spray System, heat tracing is used to prevent freezing of the sodium hydroxide solution in the Sodium Hydroxide Storage Tank and associated outdoor piping. During a Loss of Coolant Accident (LOCA), the sodium hydroxide, as part of the Reactor Building Spray System, provides for iodine removal and provides for Reactor Building sump pH control.

In the Hydrogen Monitoring System, heat tracing is used to maintain the sample tubing temperature at 275 degrees F to prevent condensation prior to analysis. This ensures the analyzers accurately detect potentially explosive levels of hydrogen post LOCA.

The system accomplishes its functions using circuit breakers, fuses, panels, heat trace, thermostats, temperature switches, cables and connections. The components of the Electrical Heat Tracing System are located throughout the plant.

Reason for Scope Determination

The Electrical Heat Tracing System meets 10 CFR 54.4(a)(1) because it is a safety-related system that is relied upon to remain functional during and following design basis events. The Electrical Heat Tracing System is not in scope under 10 CFR 54.4(a)(2) because failure of nonsafety-related portions of the system would not prevent satisfactory accomplishment of function(s) identified for 10 CFR 54.4(a)(1). The system is not in scope under 10CFR54.4(a)(3) because it is not relied upon in safety analyses or plant evaluations to perform a function that demonstrates compliance with the Commission's regulations for Fire Protection (10CFR50.48), Environmental Qualification (10CFR50.49), Pressurized Thermal Shock (10CFR50.61), Anticipated Transients Without Scram (10CFR50.62), or Station Blackout (10CFR50.63).

System Intended Functions

1. Provide and maintain sufficient reactor coolant inventory for core cooling. The Electrical Heat Tracing System is designed to prevent freezing of the Borated Water Storage Tank (BWST) outdoor piping and level instrument lines. 10 CFR 54.4 (a)(1)
2. Control combustible gas mixtures in the primary containment atmosphere. The Electrical Heat Tracing System is designed to maintain the Hydrogen Analyzer sample tubing temperature at 275 degrees F to prevent condensation prior to analysis. 10 CFR 54.4 (a)(1)
3. Provide removal of radioactive material from the primary containment atmosphere. Electrical Heat Tracing System is designed to allow sodium hydroxide to be injected with high and low pressure injection. This raises the pH of the water from the BWST. The higher pH water is more efficient in removing iodine. 10 CFR 54.4 (a)(1)

UFSAR References

6.1.2.5
6.2
7.3.2.2
9.1
9.2.1.2
9.5

License Renewal Boundary Drawings

None

2.5.1.9 Engineered Safeguards Actuation System (ESAS)

System Purpose

The Engineered Safeguards Actuation System (ESAS) is a normally operating electrical system that monitors parameters to detect a loss of integrity in the Reactor Coolant System pressure boundary. ESAS will initiate operation of high and low pressure injection systems, Reactor Building isolation, Reactor Building cooling and Reactor Building spray when a loss of coolant accident signal is initiated. In addition, these signals are used to start the Emergency Diesel Generators and to control load sequencing, when required. The Engineered Safeguards Actuation System is in scope for License Renewal.

The boundary of this system is taken from the signals generated to actuate the respective systems not the individual systems themselves. The ESAS detects a breech of Reactor Coolant System pressure boundary by low reactor coolant pressure or high reactor building atmospheric pressure. Design basis accidents resulting in these signals are loss of coolant accidents and main steam line breaks. A reactor trip signal is used as an anticipatory signal for partial isolation of non essential fluid lines penetrating the Reactor Building. Upon detection of a design basis accident, mitigating engineered safeguards features are actuated automatically by the ESAS to provide: (1) emergency core injection, (2) Reactor Building cooling, (3) Reactor Building isolation and (4) Reactor Building spray. A reactor trip via the Reactor Protection System is relied upon as a prerequisite to an appropriate performance of an ESAS actuation. The ESAS provides for automatic start of the Emergency Diesel Generators as an alternate source of power and, upon detection of a Loss of Offsite Power, provides a controlled sequence for starting of the engineered safeguards features. This assures adequate transfer of the engineered safeguards features to the alternate power sources.

The ESAS provides indication in the Control Room of its availability status, and also, the status of the actuated engineered safety feature equipment. The ESAS permits manual actuation of the ESAS system at the train and system level. Operational bypasses of ESAS actuation are provided to allow normal plant shutdown and start up. These bypasses are manually initiated by the operator per specific operating procedures. Operational bypasses are provided for high pressure injection and low pressure injection actuations. ESAS has the capability for on line testing of every component as well as the full operational sequence of actuation, including transfer to emergency power.

The system accomplishes its functions using fuses, relay modules, relays, switches, key switches, bistables, amplifiers, indicators, power supplies, pressure switches, pressure transmitters, cables and connections. The components of the ESAS are located in the Reactor Building, the Auxiliary Building and the Control Building.

For more detailed information, see UFSAR Section 7.1.3.

Reason for Scope Determination

The Engineered Safeguards Actuation System meets 10 CFR 54.4(a)(1) because it is relied upon to remain functional during and following design basis events. The Engineered Safeguards Actuation System is not in scope under 10 CFR 54.4(a)(2) because failure of nonsafety-related portions of the system would not prevent satisfactory accomplishment of function(s) identified for 10 CFR 54.4(a)(1). The Engineered Safeguards Actuation System

meets 10 CFR 54.4(a)(3) because it is relied upon in the safety analyses or plant evaluations to perform a function that demonstrates compliance with the Commission's regulations for Fire Protection (10 CFR 50.48) and Environmental Qualification (10 CFR 50.49). The Engineered Safeguards Actuation System is not relied upon in any safety analyses or plant evaluations to perform a function that demonstrates compliance with the Commission's regulation for Pressurized Thermal Shock (10 CFR 50.61), Anticipated Transients Without Scram (10 CFR 50.62), or Station Blackout (10 CFR 50.63).

System Intended Functions

1. Sense process conditions and generate signals for reactor trip or engineered safety features actuation. Upon detection of a design basis accident, mitigating engineered safeguards features are actuated automatically by the ESAS to provide: (1) emergency core injection, (2) reactor building cooling, (3) reactor building isolation, and (4) reactor building spray. 10 CFR 54.4(a)(1)
2. Relied upon in safety analyses or plant evaluations to perform a function that demonstrates compliance with the Commission's regulations for Fire Protection (10 CFR 50.48). Specific components in this system are credited for fire safe shutdown. 10 CFR 54.4(a)(3)
3. Relied upon in safety analyses or plant evaluations to perform a function that demonstrates compliance with the Commission's regulations for Environmental Qualification (10 CFR 50.49). Specific components in this system are environmentally qualified. 10 CFR 54.4(a)(3)

UFSAR References

7.1.3
7.3.2
Table 7.1-2
Table 7.1-3
Table 14.0-1

License Renewal Boundary Drawings

None

2.5.1.10 Heat Sink Protection System

System Purpose

Heat Sink Protection System (HSPS) is a normally operating electrical system that is designed to maintain the Once Through Steam Generators (OTSGs) as a heat sink for the Reactor Coolant System. The system provides the necessary instrumentation and control to initiate and control Emergency Feedwater (EFW) and to isolate main feedwater, when required to insure the availability of the heat sink. HSPS senses plant conditions and provides EFW control signals to start EFW pumps and position EFW control valves in order to maintain adequate OTSG level for forced or natural reactor coolant system circulation. Heat Sink Protection System is in scope for License Renewal.

HSPS accomplishes its functions using fuses, level transmitters, pressure instruments, temperature detectors, watt transducers, converters, summers, scalers, signal characterizers, signal isolators, power supplies, relays, pressure bistables, pressure transmitters, switches, delta-pressure transmitters, logic and actuation cabinets, cables and connections.

The components of Heat Sink Protection System are located near or in the Control Room, the Reactor Building, the Intermediate Building and the Turbine Building.

For more detailed information see UFSAR section 7.1.4.2

Reason for Scope Determination

Heat Sink Protection System meets 10 CFR 54.4(a)(1) because it is a safety-related system that is relied upon to remain functional during and following design basis events. Heat Sink Protection System is not in scope under 10 CFR 54.4(a)(2) because failure of nonsafety-related portions of the system would not prevent satisfactory accomplishment of function(s) identified for 10 CFR 54.4(a)(1). Heat Sink Protection System meets 10 CFR 54.4(a)(3) because it is relied upon in the safety analyses and plant evaluations to perform a function that demonstrates compliance with the Commission's regulations for Environmental Qualification (10 CFR 50.49), Anticipated Transients Without Scram (10 CFR 50.62), and Station Blackout (10 CFR 50.63). Heat Sink Protection System is not relied upon in any safety analyses or plant evaluations to perform a function that demonstrates compliance with the Commission's regulation for Fire Protection (10 CFR 50.48) or Pressurized Thermal Shock (10CFR50.61).

System Intended Functions

1. Remove residual heat from the reactor coolant system. HSPS maintains the Once Through Steam Generators (OTSGs) as a heat sink and maintains the OTSGs available to provide appropriate Reactor Coolant System cooling. 10 CFR 54.4 (a)(1)
2. Provide secondary heat sink. HSPS maintains adequate instrumentation and controls for the operator to monitor the operation of the OTSGs and to control system components as necessary to maintain the OTSGs available as a heat sink or to isolate main feedwater when OTSG integrity is lost. 10 CFR 54.4 (a)(1)
3. Relied upon in safety analyses or plant evaluations to perform a function that demonstrates compliance with the Commission's regulations for Environmental Qualification (10 CFR 50.49). Selected components in the HSPS are environmentally qualified. 10 CFR 54.4(a)(3)
4. Relied upon in safety analyses or plant evaluations to perform a function that demonstrates

compliance with the Commission's regulations for Anticipated Transients Without Scram (10 CFR 50.62). The HSPS low level Emergency Feedwater initiation meets requirements of the Anticipated Transients Without Scram Rule. 10 CFR 54.4(a)(3)
5. Relied upon in safety analyses or plant evaluations to perform a function that demonstrates compliance with the Commission's regulations for Station Blackout (10 CFR 50.63). The HSPS actuates and controls Emergency Feedwater to support natural circulation cooling of the Reactor Coolant System during a Station Blackout. 10 CFR 54.4(a)(3)

UFSAR References

7.1.4
7.1.5
Table 14.0-1

License Renewal Boundary Drawings

None

2.5.1.11 Integrated Control System

System Purpose

The Integrated Control System (ICS) is a normally operating electrical system that automatically keeps secondary plant or heat sink systems in equilibrium with the primary plant or heat source, reactor. The Integrated Control System is in scope for License Renewal.

The purpose of the ICS system is to provide the proper coordination of the Reactor, the Steam Generator, the Main Turbine, and the Feedwater System under all operating conditions. Proper coordination consists of producing the best load response to the unit load demand while recognizing the capabilities and limitations of the Reactor, the Steam Generator, the Main Turbine, and the Feedwater System. The ICS includes four subsystems: Unit Load Demand, Integrated Master Control, Steam Generator Feedwater Control, and Reactor Control. The ICS has direct cause and effect relationships with the Vital AC System, Feedwater System, Turbine Bypass Control System, Digital Turbine Generator Control System, Control Rod Drive System, Nuclear Instrumentation System and Non-Nuclear Instrumentation System and therefore has numerous indirect relationships to other plant systems. During certain plant conditions, the ICS will initiate a runback signal to the Rod Control Drive System, which causes a rapid insertion of control rods and the corresponding reduction in power.

The system accomplishes its functions using relay modules, relays, digital input output boards, summers, signal generators, transducers, control stations, control switches, meters, fuses, cable and cable connections. The components of the Digital Turbine Control System are located throughout the plant with most of the components located near or in the Control Room or Main Turbine.

For more detailed information, see UFSAR Section 7.2.3.

Reason for Scope Determination

The Integrated Control System meets 10 CFR 54.4(a)(1) because it is relied upon to remain functional during and following design basis events. The Integrated Control System is not in scope under 10 CFR 54.4(a)(2) because failure of nonsafety-related portions of the system would not prevent satisfactory accomplishment of function(s) identified for 10 CFR 54.4(a)(1). The Integrated Control System does not meet 10 CFR 54.4(a)(3) because it is not relied upon in any safety analyses or plant evaluations to perform a function that demonstrates compliance with the Commission's regulation for Fire Protection (10 CFR 50.48), Environmental Qualification (10 CFR 50.49), Pressurized Thermal Shock (10 CFR 50.61), Anticipated Transients Without Scram (10 CFR 50.62), and Station Blackout (10 CFR 50.63).

System Intended Functions

1. Introduces emergency negative reactivity to make the reactor subcritical. The ICS is relied upon for mitigating action in the following design basis events: Stuck Out, Stuck In or Dropped Control Rod Accident, Loss of Electric Load, Steam Line Break, Steam Generator Tube Failure and Loss of Feedwater Accident. The ICS will initiate a runback signal which is a rapid insertion of control rods and the associated reduction in power. 10 CFR 54.4(a)(1)

UFSAR References

7.2.3,
14.1.2.7
14.1.2.8
14.1.2.9
14.1.2.10
14.2.2.7

License Renewal Boundary Drawings

none

2.5.1.12 Lighting System

System Purpose

The Lighting System is a normally operating electrical system. The purpose of the Lighting System is to provide illumination for all plant areas for safe access, egress and equipment operation under normal conditions or abnormal conditions such as Fire or Station Blackout. The Lighting System is in scope for License Renewal.

The Lighting System consists of the following plant systems: Normal Lighting System and Emergency Lighting System.

The Normal Lighting System provides general plant illumination following standard practices. The Emergency Lighting System is powered from AC and DC sources. The Emergency Lighting System as provided for regulated events includes emergency lighting units with at least an 8-hour battery power supply that are either permanently installed or portable.

The system accomplishes its functions using lighting fixtures, battery powered lighting units, bulbs, exit signs and cables and connections. The components of the Lighting System are located throughout the plant.

Reason for Scope Determination

The Lighting System does not meet 10 CFR 54.4(a)(1) because it is not a safety-related system that is relied upon to remain functional during and following design basis events. The Lighting System is not in scope under 10 CFR 54.4(a)(2) because failure of nonsafety-related portions of the system would not prevent satisfactory accomplishment of function(s) identified for 10 CFR 54.4(a)(1). The Lighting System does meet 10 CFR 54.4(a)(3) because it is relied upon in the safety analyses or plant evaluations to perform a function that demonstrates compliance with the Commission’s regulations for Fire Protection (10 CFR 50.48) and Station Blackout (10 CFR 50.63). The Lighting System is not relied upon in any safety analyses or plant evaluations to perform a function that demonstrates compliance with the Commission’s regulation for Environmental Qualification (10 CFR 50.49), Pressurized Thermal Shock (10 CFR 50.61), and Anticipated Transients Without Scram (10 CFR 50.62).

System Intended Functions

1. Relied upon in safety analyses or plant evaluations to perform a function that demonstrates compliance with the Commission's regulations for Fire Protection (10 CFR 50.48). Provides emergency lighting for operator access, operation and monitoring. 10 CFR 54.4(a)(3)
2. Relied upon in safety analyses or plant evaluations to perform a function that demonstrates compliance with the Commission's regulations for Station Blackout (10 CFR 50.63). Provides emergency lighting for operator access, operation and monitoring. 10 CFR 54.4(a)(3)

UFSAR References

None

License Renewal Boundary Drawings

None

THIS PAGE INTENTIONALLY LEFT BLANK

2.5.1.13 Main and Auxiliary Transformers

System Purpose

The Main and Auxiliary Transformers system is a normally energized electrical system. The transformers step-up the voltage of plant generated power, 19 kV to 230 kV, and step-down transmission system voltages for distribution to plant loads, 230 kV to 6900 V and 4160 V. The Main and Auxiliary Transformers system consists of the Main Transformer System and the Auxiliary Transformer System. The Main and Auxiliary Transformers system is in scope for License Renewal.

The Main Transformers receive power generated by the Main Generator. The Main Generator generates electric power at 19 kV, which is fed through an isolated phase bus to the unit main transformer bank, where it is stepped up to 230 kV and delivered to the Substation. The Main Transformers feed the 230 kV Substation through two circuit breakers located in the substation yard.

Two Auxiliary Transformers are connected to different 230 kV buses at the Substation and provide a source of power for startup, operations, and shutdown requirements. The transformers are part of the preferred power supply for Engineered Safeguards loads. Each transformer has the MVA capacity to handle all of the above loads. Each transformer has a Load Tap Changer (LTC) installed on the 4 kV winding that senses voltage at its respective Engineered Safeguards Bus to automatically control voltage within a narrow band with variations in grid voltage. The Auxiliary Transformers can be isolated from the Substation by manually operated disconnect switches. These vertical break manually operated switches are opened only under no load conditions.

Support power for the transformers is provided by 480 VAC, 120 VAC and 250 VDC feeds from the station electrical distribution system.

The system accomplishes its functions using transformers, coolers, tap changers, rapid pressure relays, gas detectors/monitors, valves, protective relays, panels, switches, sensors, gauges, indicators, current and voltage transducers, disconnects, breakers, fuses, bus duct, cables and connections.

Reason for Scope Determination

The Main and Auxiliary Transformers system is not in scope under 10 CFR 54.4(a)(1) because no portions of the system are safety-related or relied upon to remain functional during and following design basis events. The Main and Auxiliary Transformers System meets 10 CFR 54.4(a)(2) because failure of nonsafety-related portions of the system could prevent satisfactory accomplishment of function(s) identified for 10 CFR 54.4(a)(1). The Main and Auxiliary Transformers System meets 10 CFR 54.4(a)(3) because it is relied upon in the safety analyses or plant evaluations to perform a function that demonstrates compliance with the Commission's regulations for Station Blackout (10 CFR 50.63). The Main and Auxiliary Transformers System is not relied upon in any safety analyses or plant evaluations to perform a function that demonstrates compliance with the Commission's regulation for Fire Protection (10 CFR 50.48), Environmental Qualification (10 CFR 50.49), Pressurized Thermal Shock (10 CFR 50.61) and Anticipated Transients Without Scram (10 CFR 50.62).

System Intended Functions

1. Resist non-safety related SSC failure that could prevent satisfactory accomplishment of a safety-related function. The Main and Auxiliary Transformer System provides power to equipment credited to mitigate the steam generator tube accident and the rod ejection accident. 10 CFR 54.4(a)(2)
2. Relied upon in safety analyses or plant evaluations to perform a function that demonstrates compliance with the Commission's regulations for Station Blackout (10 CFR 50.63). The Main and Auxiliary Transformers system is re-energized as part of the restorative actions for a Station Blackout. 10 CFR 54.4(a)(3)

UFSAR References

8.2.1
8.2.2.2

License Renewal Boundary Drawings

None

2.5.1.14 Non-Nuclear Instrumentation and Monitoring System

System Purpose

The Non-Nuclear Instrumentation and Monitoring System is a normally operating electrical system that furnishes measurements, indications and control signals for automatic and manual operation and monitoring of the plant primary loop, secondary loop and auxiliary systems under normal and emergency conditions.

The Non-Nuclear Instrumentation and Monitoring System consists of the following plant systems: Non-Nuclear Instrumentation System, Pressurizer Relief and Safety Valve Indication System, Annunciator System and Reactor Coolant Tsat Meter and Alarm System.

The Non-Nuclear Instrumentation System provides the required input signals of process variables for the Reactor Protection System, regulating (Integrated Control) and auxiliary systems. It performs the required process control functions in response to those systems and provides instrumentation for startup, operation and shutdown of the reactor under normal and emergency conditions. The Non-Nuclear Instrumentation System provides measurements used to indicate, record, alarm, interlock and control process variables such as pressure, temperature, level and flow in the Reactor Coolant, secondary and auxiliary systems.

The Pressurizer Relief and Safety Valve Indication System provides Control Room indication for the Pilot Operated Relief Valve (PORV) and Pressurizer Code Safety Valves. In the event the PORV or one of the Pressurizer Code Safety Valves is actuated, it is necessary to detect it has opened and to verify it has reseated. Position indication in the Control Room is based on discharge flow as measured by differential pressure transmitters connected across elbow taps downstream of each of the valves. In addition, the PORV is monitored by accelerometers. A backup monitoring system measures valve position by monitoring the heatup and cooldown rates of the individual relief valve discharge lines. Differentially connected thermocouples compare the discharge line temperature of each valve relative to the local ambient temperature. Portions of the Pressurizer Relief and Safety Valve Indication System provide the reactor coolant pressure boundary; however, this function for License Renewal is covered in the Reactor Vessel System scoping and screening.

The Annunciator System provides visual and audible display to indicate important changes in plant conditions. Some annunciators are used to initiate required operator action for accident mitigation.

The Reactor Coolant Tsat Meter and Alarm System monitors and displays the margin between actual Reactor Coolant System temperature and the saturation temperature for the existing Reactor Coolant System pressure. An alarm is generated if the margin should decrease below a preset value.

The Non-Nuclear Instrumentation and Monitoring System accomplishes its functions using computer peripherals, multiplexers, breakers, meters, fuses, indicators, relays, relay modules, amplifiers, signal processors, recorders, power supplies, power panels, panels, preamps, signal converters, signal generators, summers, bistables, transmitters, switches, thermocouples, control switches, converters and cables and connections.

The components of the Non-Nuclear Instrumentation and Monitoring System are located in the

Reactor Building and the Control Building.

The Non-Nuclear Instrumentation and Monitoring System is in scope for License Renewal.

Reason for Scope Determination

Non-Nuclear Instrumentation and Monitoring System meets 10 CFR 54.4(a)(1) because it is a safety-related system that is relied upon to remain functional during and following design basis events. Non-Nuclear Instrumentation and Monitoring System is not in scope under 10 CFR 54.4(a)(2) because failure of nonsafety-related portions of the system would not prevent satisfactory accomplishment of function(s) identified for 10 CFR 54.4(a)(1). Non-Nuclear Instrumentation and Monitoring System meets 10 CFR 54.4(a)(3) because it is relied upon in the safety analyses or plant evaluations to perform a function that demonstrates compliance with the Commission's regulations for Anticipated Transients Without Scram (10 CFR 50.62), Environmental Qualification (10 CFR 50.49), Fire Protection (10 CFR 50.48) and Station Blackout (10 CFR 50.63). Non-Nuclear Instrumentation and Monitoring System is not relied upon in any safety analyses or plant evaluations to perform a function that demonstrates compliance with the Commission's regulation for Pressurized Thermal Shock (10 CFR 50.61).

System Intended Functions

1. Sense process conditions and generate signals for reactor trip or engineered safety features actuation. Non-Nuclear Instrumentation and Monitoring System provides the required input signals of process variables for system parameters that actuate the Reactor Protection and Emergency Safeguards Actuation Systems. 10 CFR 54.4(a)(1)
2. Relied upon in safety analyses or plant evaluations to perform a function that demonstrates compliance with the Commission's regulations for Fire Protection (10 CFR 50.48). Provides input signals to components required for fire safe shutdown. 10 CFR 54.4(a)(3)
3. Relied upon in safety analyses or plant evaluations to perform a function that demonstrates compliance with the Commission's regulations for Environmental Qualification (10 CFR 50.49). Selected components in the Non-Nuclear Instrumentation and Monitoring System are environmentally qualified. 10 CFR 54.4(a)(3)
4. Relied upon in safety analyses or plant evaluations to perform a function that demonstrates compliance with the Commission's regulations for Anticipated Transients Without Scram (10 CFR 50.62). The Tsat Meter and Alarm System is relied upon during an Anticipated Transients Without Scram event. 10 CFR 54.4(a)(3)
5. Relied upon in safety analyses or plant evaluations to perform a function that demonstrates compliance with the Commission's regulations for Station Blackout (10 CFR 50.63). The Tsat Meter and Alarm System is relied upon during an Station Blackout event. 10 CFR 54.4(a)(3)

UFSAR References

1.3.2.9
4.2.4
7.3.2
Table 7.3-2
7.4.3
Table 14.0-1

License Renewal Boundary Drawings

None

THIS PAGE INTENTIONALLY LEFT BLANK

2.5.1.15 Nuclear Instrumentation and Incore Monitoring System

System Purpose

Nuclear Instrumentation and Incore Monitoring System is a normally operating electrical system that is designed to supply neutron information over the full range of reactor operation and to provide neutron flux detectors to monitor core performance. It also provides an independent indication of core outlet temperature. Nuclear Instrumentation and Incore Monitoring System is in scope for license renewal.

Nuclear Instrumentation and Incore Monitoring System consists of two plant systems: Nuclear Instrumentation System and the Incore Monitoring System.

The Nuclear Instrumentation System is designed to supply the reactor operator with neutron information over the full range of the reactor and to supply reactor power information to the Reactor Protection System. The Nuclear Instrumentation System also supplies reactor power information to the Integrated Control System and generates interlocks for the Control Rod Drive System to actuate out motion inhibit interlocks. The Nuclear Instrumentation System has 10 channels of neutron information. Two channels are wide range. The remaining eight channels consist of three ranges of sensitivity (source range, intermediate range and power range), which combine to give a continuous measurement of reactor power from source level to approximately 125 percent of rated power.

The Incore Monitoring System provides neutron flux detectors to monitor core performance. The Incore Monitoring System provides monitoring of core temperature conditions during loss of flow or loss of coolant accidents to warn the operator of potential fuel failure due to overheating. Incore, self-powered neutron detectors measure the neutron flux in the core to provide a history of power distributions and fuel burn up data to assist in fuel decisions. The Incore Monitoring System is used to support the calibration of the out of core power range detectors. A portion of the core exit thermocouples in the incore monitors are monitored in the main control room by the Back-up Incore Thermocouple Readout, BIRO, system, which is electrically isolated from the plant computer. Portions of the Incore Monitoring System provide the reactor coolant pressure boundary; however, this function for license renewal is covered in the Reactor Vessel System.

Nuclear Instrumentation and Incore Monitoring System accomplishes its functions using meters, fuses, indicators, amplifiers, signal processors, recorders, power supplies, bistables, ion chambers, fission chambers, thermocouples, self powered neutron detectors, control switches, converters, sensors, and cables and connections.

Most of the components of Nuclear Instrumentation and Incore Monitoring System are located in the Control Building, Reactor Building or Fuel Handling Building.

For more detailed information see UFSAR sections 7.3.1 and 7.3.3.

Reason for Scope Determination

Nuclear Instrumentation and Incore Monitoring System meets 10 CFR 54.4(a)(1) because it is a safety-related system that is relied upon to remain functional during and following design basis events. Nuclear Instrumentation and Incore Monitoring System is not in scope under 10

CFR 54.4(a)(2) because failure of nonsafety-related portions of the system would not prevent satisfactory accomplishment of function(s) identified for 10 CFR 54.4(a)(1). Nuclear Instrumentation and Incore Monitoring System meets 10 CFR 54.4(a)(3) because it is relied upon in the safety analyses or plant evaluations to perform a function that demonstrates compliance with the Commission's regulations for Fire Protection (10 CFR 50.48) and Environmental Qualification (10 CFR 50.49). Nuclear Instrumentation and Incore Monitoring System is not relied upon in any safety analyses or plant evaluations to perform a function that demonstrates compliance with the Commission's regulation for Pressurized Thermal Shock (10 CFR 50.61), Anticipated Transients Without Scram (10 CFR 50.62) or Station Blackout (10 CFR 50.63).

System Intended Functions

1. Sense process conditions and generate signals for reactor trip or engineered safety features actuation. Provide power inputs to Reactor Protection System. Provide indication of core temperature conditions during loss of flow or loss of coolant accidents. 10 CFR 54.4(a)(1)
2. Relied upon in safety analyses or plant evaluations to perform a function that demonstrates compliance with the Commission's regulations for Fire Protection (10 CFR 50.48). Provide information about the neutron flux level. 10 CFR 54.4(a)(3)
3. Relied upon in safety analyses or plant evaluations to perform a function that demonstrates compliance with the Commission's regulations for Environmental Qualification (10 CFR 40.49). Selected components in the Nuclear Instrumentation System are environmentally qualified. 10 CFR 54.4(a)(3)

UFSAR References

7.1
7.2
7.3.1
7.3.2
7.3.3

License Renewal Boundary Drawings

None

2.5.1.16 Reactor Protection and Control Rod Drive System

System Purpose

The Reactor Protection and Control Rod Drive System is a normally operating electrical system that; protects the reactor core against fuel cladding damage, protects the Reactor Coolant System (RCS) pressure boundary from overpressure damage; provides a means of reactivity control in the reactor by monitoring and controlling the motion and position of the group and individual control rod assemblies; and provides a signal to initiate Reactor Building isolation following a reactor trip. The Reactor Protection and Control Rod Drive System is in scope for License Renewal.

Reactor Protection and Control Rod Drive System consists of the following plant systems: Reactor Protection System (RPS), Control Rod Drive Control System (CRDCS) and Diverse Scram System (DSS). The RPS is a four redundant channel protection system. Whenever any two of the four channels agree that a set point has been reached or exceeded, a reactor trip signal is initiated by each RPS channel. The CRDCS receives the reactor trip signals and opens the control rod drive breakers to release the control rods resulting in a trip of the reactor. The reactor is tripped based on predetermined trip settings to prevent violation of the plant safety limits. The RPS safety functions are designed to provide protection for the plant safety limits as demonstrated by the plant safety analysis. The principal safety function is to cause termination of core power production by causing a reactor trip.

The CRDCS provides the reactor trip function by removing power to all the Control Rod Drive Mechanisms (CRDMs), thus providing a rapid insertion of the control rods into the fuel core from gravity force when directed by the RPS, Anticipatory Reactor Trip Signal (ARTS), DSS or the manual reactor trip switch. The CRDS provides for controlled withdrawal, controlled insertion and holding of the Control Rod Assembly (CRA), to establish and maintain the power level required for a given reactor coolant boron concentration. Continuous rod position indication, as well as full-in and full-out position indication, is provided for each control rod drive. The CRDCS provides for withdrawal and insertion of the CRAs to maintain the desired reactor output. This is achieved either through automatic control by the Integrated Control System or through manual control by the operator. This control compensates for short-term reactivity changes. It is achieved through the positioning in the core of 61 CRAs and eight axial power shaping rod assemblies.

A Diverse Scram System (DSS) addresses Anticipated Transients Without Scram (ATWS) requirements at TMI-1. The DSS opens the breakers that supply power to the CRDS. The DSS is a backup to the RPS and CRDCS if RPS fails to actuate or CRDCS breakers fail to open.

The system accomplishes its functions using circuit breakers, fuses, cabinets, relays, control assemblies, rectifier modules, amplifiers, sequencers, gate drives, power supplies, position indicators, blowers, voltage regulators, amplifiers, fans, key switches, meters, transducers, bistables, signal converters, pressure switches, cables and connections.

The components of Reactor Protection and Control Rod Drive System are located in the Reactor, Intermediate, Auxiliary and Control Buildings.

Reason for Scope Determination

Reactor Protection and Control Rod Drive System meets 10 CFR 54.4(a)(1) because it is relied upon to remain functional during and following design basis events. Reactor Protection and Control Rod Drive System is not in scope under 10 CFR 54.4(a)(2) because failure of nonsafety-related portions of the system would not prevent satisfactory accomplishment of function(s) identified for 10 CFR 54.4(a)(1). Reactor Protection and Control Rod Drive System meets 10 CFR 54.4(a)(3) because it is relied upon in the safety analyses or plant evaluations to perform a function that demonstrates compliance with the Commission's regulations for Anticipated Transient Without Scram (10 CFR 50.62) and Station Blackout (10 CFR 50.63). Reactor Protection and Control Rod Drive System is not relied upon in any safety analyses or plant evaluations to perform a function that demonstrates compliance with the Commission's regulation for Fire Protection (10 CFR 50.48), Environmental Qualification (10 CFR 50.49) or Pressurized Thermal Shock (10 CFR 50.61).

System Intended Functions

1. Sense process conditions and generate signals for reactor trip or engineered safety features actuation. The Reactor Protection and Control Rod Drive System supports reactor trip. 10 CFR 54.4 (a)(1)
2. Achieve and maintain the reactor core subcritical for any mode of normal operation or event. The Reactor Protection and Control Rod Drive System supports reactor trip and shutdown. 10 CFR 54.4 (a)(1)
3. Introduce emergency negative reactivity to make the reactor subcritical. The Reactor Protection and Control Rod Drive System supports reactor trip. 10 CFR 54.4 (a)(1)
4. Relied upon in safety analyses or plant evaluations to perform a function that demonstrates compliance with the Commission's regulations for Anticipated Transients Without Scram (10 CFR 50.62). The Diverse Scram System is a backup to the RPS and CRDCS systems if RPS fails to actuate or CRDCS breakers fail to open. 10 CFR 54.4(a)(3)
5. Relied upon in safety analyses or plant evaluations to perform a function that demonstrates compliance with the Commission's regulations for Station Blackout (10 CFR 50.63). The Reactor Protection and Control Rod Drive System will trip the Reactor on loss of the Reactor Coolant Pumps and provide a signal to Engineered Safeguards Actuation System for isolation. 10 CFR 54.4(a)(3)

UFSAR References

7.1.2
7.1.5
7.2.2
Table 14.0-1

License Renewal Boundary Drawings

None

2.5.1.17 Remote Shutdown Panel

System Purpose

The Remote Shutdown Panel system is a standby electrical system that provides for the ability to safely shutdown the plant from locations outside of the Control Room. This system is designed to criteria as specified in 10 CFR 50 Appendix A, General Design Criteria 19; 10 CFR 50 Appendix R, Section III.G.3; 10 CFR 50.62, Requirements for Reduction of Risk from Anticipated Transients Without Scram (ATWS) Events for Light-Water-Cooled Nuclear Power Plants; and 10 CFR 50.63 Loss of All Alternating Current Power. The Remote Shutdown Panels support emergency and abnormal plant operating procedures. The Remote Shutdown Panel system is in scope for License Renewal.

The Remote Shutdown Panel system includes three adjoining but physically separate Remote Shutdown Panels. The separation between panels is such that adequate physical and electrical separation is provided while still providing operator capability for comparison of plant variables on different panels. A remote panel is also provided to support local operation of the 'B' Emergency Diesel Generator. The Remote Shutdown Panel system also includes Remote Shutdown Transfer Switch Panels, three separate and safety grade panels. The safety function of the transfer switch panels applies only to the circuit isolation transfer switches and auxiliary relays which connect directly with safety grade equipment when the switches are in the normal mode. The operation of the transfer switches, which are under administrative control, will isolate a system's or component's circuits from the Relay and Control Rooms, and will in turn, transfer the control of the system or component from the Control Room to the appropriate Remote Shutdown Panel. Either offsite power, if available, or the onsite Emergency Diesel Generators supply electrical power. Both the normal and remote shutdown systems are capable of achieving cold shutdown with a loss of offsite power.

Plant variables required to be monitored for safe shutdown are processed by Signal Conditioning Cabinets. The Signal Conditioning Cabinets also provide isolated outputs to the safety grade plant variables in the Control Room.

The system accomplishes its functions using signal conditioners, panels, circuit breakers, relays, indicators, converters, power supplies, control switches, meters, fuses, cable and cable connections. The components of the Remote Shutdown Panel system are located throughout the plant with most of the components located in the Control Tower.

For more detailed information, see UFSAR Section 7.4.6.

Reason for Scope Determination

The Remote Shutdown Panel system meets 10 CFR 54.4(a)(1) because it is a safety-related system that is relied upon to remain functional during and following design basis events. The Remote Shutdown Panel system is not in scope under 10 CFR 54.4(a)(2) because failure of nonsafety-related portions of the system would not prevent satisfactory accomplishment of function(s) identified for 10 CFR 54.4(a)(1). The Remote Shutdown Panel system meets 10 CFR 54.4(a)(3) because it is relied upon in the safety analyses or plant evaluations to perform a function that demonstrates compliance with the Commission's regulations for Fire Protection (10 CFR 50.48), Anticipated Transients Without Scram (10 CFR 50.62) and Station Blackout (10 CFR 50.63). The Remote Shutdown Panel system is not relied upon in any safety

analyses or plant evaluations to perform a function that demonstrates compliance with the Commission's regulation for Environmental Qualification (10 CFR 50.49) and Pressurized Thermal Shock (10 CFR 50.61).

System Intended Functions

1. Provide centralized area for control and monitoring of nuclear safety related equipment. The Remote Shutdown Panel system provides a centralized area for control and monitoring, outside the Control Room. 10 CFR 54.4 (a)(1)
2. Relied upon in safety analyses or plant evaluations to perform a function that demonstrates compliance with the Commission's requirements for Fire Protection (10 CFR 50.48). The Remote Shutdown Panel system is credited for achieving Hot and Cold Shutdown if the Control Room controls and indications are disabled due to a fire in the Control Room or Relay Room. 10 CFR 54.4 (a)(3)
3. Relied upon in safety analyses or plant evaluations to perform a function that demonstrates compliance with the Commission's regulations for Anticipated Transients Without Scram (10 CFR 50.62). The electrically isolated Reactor Coolant System pressure signals originate from the Foxboro Remote Shutdown Panel Signal Conditioning Cabinets, which in turn provide isolated non-1E outputs of Reactor Coolant System pressure to the Diverse Scram System logic to trip the Control Rod Drives on high pressure. 10 CFR 54.4 (a)(3)
4. Relied upon in safety analyses or plant evaluations to perform a function that demonstrates compliance with the Commission's regulations for Station Blackout (10CFR50.63). The Remote Shutdown Panel system provides alternate indications of Pressurizer Level and Reactor Coolant Loop Pressure. 10 CFR 54.4 (a)(3)

UFSAR References

7.2.3.3
7.3.2.2
7.4.6
Table 7.4-1

License Renewal Boundary Drawings

none

2.5.1.18 Substation

System Purpose

The Substation is a normally energized electrical system. The 230 kV Substation is located east of the Turbine Building. It consists of two 230 kV buses and associated circuit breakers and disconnect switches. The Substation provides a means to transmit the power generated by the Main Generator. The Main Transformers feed the 230 kV Substation through two generator circuit breakers located in the substation yard. The Substation also supplies offsite power to TMI-1 via the Auxiliary Transformers. The Substation is in scope for License Renewal.

The Substation design incorporates a breaker-and-a-half scheme for high reliability and is connected to the existing First Energy Company 230 kV transmission network. Analytical studies demonstrate that the offsite power system for TMI-1 with two Auxiliary Transformers is of sufficient capacity and capability to provide power to automatically start as well as operate all required safety loads at the minimum expected/predicted grid voltage.

Each circuit breaker and auxiliary transformer can be isolated from the system by manually operated disconnect switches. These vertical break manually operated switches are operated under no load conditions.

Support power is provided by 480 VAC, 120 VAC and 125 VDC feeds from the station distribution system. Back-up power is available from diesel generators and a battery located at the Substation.

The system accomplishes its functions using switchyard bus, manual disconnect switches, circuit breakers, transmission conductors, high voltage insulators, 480 and 120 VAC distribution equipment, 125 VDC distribution equipment, diesel generators, a battery and associated battery charger, protective relays, tone and carrier trip system, metering, control switches, fuses, cable and cable connections.

Reason for Scope Determination

The Substation is not in scope under 10 CFR 54.4(a)(1) because no portions of the substation are safety-related or relied upon to remain functional during and following design basis events. The Substation meets 10 CFR 54.4(a)(2) because failure of nonsafety-related portions of the system could prevent satisfactory accomplishment of function(s) identified for 10 CFR 54.4(a)(1). The Substation meets 10 CFR 54.4(a)(3) because it is relied upon in the safety analyses or plant evaluations to perform a function that demonstrates compliance with the Commission's regulations for Station Blackout (10 CFR 50.63). The Substation is not relied upon in any safety analyses or plant evaluations to perform a function that demonstrates compliance with the Commission's regulation for Anticipated Transients Without Scram (10 CFR 50.62), Environmental Qualification (10 CFR 50.49), Fire Protection (10 CFR 50.48), and Pressurized Thermal Shock (10 CFR 50.61).

System Intended Functions

1. Resists nonsafety-related SSC failure that could prevent satisfactory accomplishment of a safety-related function. The Substation provides power to equipment credited to mitigate the

steam generator tube accident and the rod ejection accident. 10 CFR 54.4(a)(2)
2. Relied upon in safety analyses or plant evaluations to perform a function that demonstrates compliance with the Commission's regulations for Station Blackout (10 CFR 50.63). The Substation is the source of power for restorative actions for a Station Blackout. 10 CFR 54.4(a)(3)

UFSAR References

8.2.1
1.2.6

License Renewal Boundary Drawings

None

2.5.2 ELECTRICAL COMMODITY GROUPS

2.5.2.1 Identification of Electrical Commodity Groups

The first step of the screening process is to identify the electrical and I&C components within the in scope electrical, I&C, and mechanical systems. The in scope components were then categorized into electrical commodity groups based on commodity groups listed in NEI 95-10 Appendix B, NUREG-1800 Table 2.1-5, and the EPRI License Renewal Electrical Handbook, as well as TMI-1 configuration specifics using plant design documentation, drawings, and the Component Record List (CRL).

2.5.2.2 Application of Screening Criterion 10 CFR 54.21 (a)(1)(i) to the Electrical Commodity Groups

Following the identification of the electrical commodity groups, the criteria of 10 CFR 54.21 (a)(1)(i) were applied to identify commodity groups that perform their intended functions without moving parts or without a change in configuration or properties. The following electrical commodity groups were determined to meet the screening criteria of 10 CFR 54.21 (a)(1)(i).

- Cable Connections (Metallic Parts)
- Connector Contacts for Connectors Exposed to Borated Water Leakage
- Electrical Equipment Subject to 10 CFR 50.49 Environmental Qualification Requirements
- Electrical Penetrations
- Fuse Holders
- High Voltage Insulators
- Insulated Cables and Connections
- Metal Enclosed Bus
- Splices
- Switchyard Bus and Connections
- Terminal Blocks
- Transmission Conductors and Connections
- Uninsulated Ground Conductors

2.5.2.3 Elimination of Commodity Groups With No License Renewal Intended Functions

The following electrical commodity group was determined to not have a License Renewal intended function:

- The Uninsulated Ground Conductors commodity group is comprised of grounding cable and associated connectors. Ground conductors are provided for equipment and personnel protection. They do not perform an intended function for license renewal. Therefore, Uninsulated Ground Conductors are not subject to aging management review.

2.5.2.4 Application of Screening Criterion 10 CFR 54.21 (a)(1)(ii) to Electrical Commodity Groups

The 10 CFR 54.21 (a)(1)(ii) screening criterion was applied to the specific component commodity groups that remained following application of the 10 CFR

54.21 (a)(1)(i) criterion. 10 CFR 54.21 (a)(1)(ii) allows the exclusion of those commodity groups that are subject to replacement based on a qualified life or specified time period. The only electrical commodities identified for exclusion by the criteria of 10 CFR 54.21 (a)(1)(ii) are electrical components included in the Three Mile Island Environmental Qualification (EQ) Program. This is because electrical components included in the EQ Program have defined qualified lives and are replaced prior to the expiration of their qualified lives. No electrical components within the Three Mile Island EQ Program are subject to aging management review in accordance with the screening criteria of 10 CFR 54.21 (a)(1)(ii). See Section 4.8 for the TLAA evaluation of the Three Mile Island EQ Program.

2.5.2.5 Determination of Electrical Commodity Groups Subject to Aging Management Review

The remaining commodity groups are evaluated to determine which ones are subject to aging management review, considering industry operating experience and TMI-1 specific configurations. The electrical commodity groups subject to aging management review are identified in Table 2.5-1, along with the associated intended functions. These determinations are described below.

2.5.2.5.1 Insulated Cables and Connections

The insulated cables and connections commodity group was separated for aging management review into subcategories based on their treatment in NUREG-1801:

- Insulated Cables and Connections
- Insulated Cables and Connections Used in Instrumentation Cables
- Insulated Inaccessible Medium Voltage Cables

Specific types of insulated cables and connections include:

- Electrical Penetration Pigtails
- Splices
- Terminal Blocks
- Insulating Portions of Fuse Holders

These specific types of insulated cables and connections are evaluated for aging management review within this commodity group.

Numerous insulated cables and connections are included in the EQ Program and, therefore, are not subject to an aging management review in accordance with the screening criteria of 10 CFR 54.21 (a)(1)(ii). Insulated cables and connections not included in the EQ Program meet the criterion of 10 CFR 54.21(a)(1)(ii) and are subject to an aging management review.

Insulated cables and connections inside the enclosure of an active device (e.g., motor leads and connections, and cables and connections internal to relays, chargers, switchgear, transformers, power supplies, etc.) are maintained along with the other subcomponents and piece-parts inside the enclosure and are not subject to an aging management review.

2.5.2.5.2 Metal Enclosed Bus

The Metal Enclosed Bus commodity group supplies power (1) from the auxiliary transformers to the 6900 V Auxiliary System, (2) from the auxiliary transformers and the SBO diesel generator to the 4160 V Auxiliary System, and (3) between select 480 V motor control centers. These portions of the power distribution system are in the scope of license renewal and supply electrical power from the substation to plant buses, to power in scope license renewal components and for recovery from a station blackout event. Therefore, metal enclosed bus meets the screening criterion of 10 CFR 54.21(a)(1)(ii) and is subject to aging management review.

2.5.2.5.3 Fuse Holders

The Fuse Holder commodity group includes fuse holders that are not part of a larger assembly and are not included in the EQ Program. Both metallic and non-metallic portions of fuse holders that are not part of a larger assembly and are not included in the EQ Program meet the screening criterion of 10 CFR 54.21(a)(1)(ii) and are subject to aging management review. Insulating portions of fuse holders are evaluated with insulated cables and connections (Section 2.5.2.5.1).

2.5.2.5.4 Cable Connections (Metallic Parts)

The Cable Connectors (Metallic Parts) commodity group includes metallic portions of cable connections that are not included in the EQ Program. The metallic connections evaluated include splices, connectors, and terminal blocks. Therefore, Cable Connections (Metallic Parts) meet the screening criterion of 10 CFR 54.21(a)(1)(ii) and are subject to aging management review.

2.5.2.5.5 Connnector Contacts for Electrical Connectors Exposed to Borated Water Leakage

The Connector Contacts for Electrical Connectors Exposed to Borated Water Leakage commodity group includes electrical connections that are not included in the EQ Program and are located in the Reactor, Fuel Handling or Auxiliary Building. These electrical connections meet the screening criterion of 10 CFR 54.21(a)(1)(ii) and are subject to aging management review.

2.5.2.5.6 Electrical Penetrations

Environmentally qualified electrical penetrations are managed under the Environmental Qualification Program, which is evaluated as a time-limited aging analysis. The electrical continuity of the non-environmentally qualified electrical penetrations is managed under the Electrical Cables and Connections Not Subject to 10 CFR 50.49 Environmental Qualification Requirements program. The pressure boundary function of electrical penetrations is evaluated in Section 2.4.14, Reactor Building.

2.5.2.5.7 High Voltage Insulators

The High Voltage Insulators commodity group supports a portion of the circuits that supply power from the electric transmission system to plant buses, to power in scope license renewal components and for recovery from a station blackout event. High Voltage Insulators are not included in the EQ program. Therefore, High Voltage Insulators meet the screening criterion of 10 CFR 54.21(a)(1)(ii) and are subject to an aging management review.

2.5.2.5.8 Transmission Conductors and Connections, Switchyard Bus and Connections

The Transmission Conductors and Connections commodity group forms a portion of the circuits that supply power from the electric transmission system to plant buses, to power in scope license renewal components and for recovery from a station blackout. The Transmission Conductors and Connections are not included in the EQ program. Therefore, Transmission Conductors and Connections meet the screening criterion of 10 CFR 54.21(a)(1)(ii) and are subject to an aging management review.

The Switchyard Bus and Connections commodity group forms a portion of the circuits that supply power from the electrical transmission system to plant buses to power in scope license renewal components and for recovery from a station blackout. The Switchyard Bus and Connections are not included in the EQ program. Therefore, Switchyard Bus and Connections meet the screening criterion of 10 CFR 54.21(a)(1)(ii) and are subject to an aging management review.

Table 2.5-1 Electrical Commodity Groups
Components Subject to Aging Management Review

Commodity Group	Intended Functions
Cable Connections (Metallic Parts)	Electrical Continuity
Connector Contacts for Electrical Connectors Exposed to Borated Water Leakage	Electrical Continuity
Fuse Holders	Electrical Continuity
High Voltage Insulators	Insulation - Electrical
Insulated Cables and Connections	Electrical Continuity
Insulated Cables and Connections Used in Instrumentation Circuits	Electrical Continuity
Insulated Inaccessible Medium Voltage Cables	Electrical Continuity
Metal enclosed bus	Electrical Continuity
Metal enclosed bus	Insulation - Electrical
Metal enclosed bus	Shelter, Protection
Switchyard Bus and Connections	Electrical Continuity
Transmission Conductors and Connections	Electrical Continuity

The aging management review results for these components are provided in:
Table 3.6.2-1 Electrical Commodities
Summary of Aging Management Evaluation