AmerGen Energy Company, LLC
4300 Winfield Road
Warrenville, IL 60555

www.exeloncorp.com

AmerGen
An Exelon Company

10 CFR 50.55a

RS-07-145

November 2, 2007

U. S. Nuclear Regulatory Commission
ATTN: Document Control Desk
Washington, D.C. 20555

Clinton Power Station, Unit 1
Facility Operating License No. NPF-62
NRC Docket No. 50-461

Subject: Supplement to Request for Proposed Alternative to Performance of System Pressure Tests and VT-2 Visual Examination Requirements for all Class 2 Instrument Air (IA) Piping and the Class 3 IA Piping Supplying all SRVs and Both Feedwater Containment Outboard Isolation Check Valves

Reference: Letter from Mr. D. M. Benyak (AmerGen Energy Company, LLC) to U. S. NRC, "Proposed Alternative to Performance of System Pressure Tests and VT-2 Visual Examination Requirements for all Class 2 Instrument Air (IA) Piping and the Class 3 IA Piping Supplying all SRVs and Both Feedwater Containment Outboard Isolation Check Valves," dated December 15, 2006

In the referenced letter AmerGen Energy Company, LLC (AmerGen) requested NRC approval of a request for a proposed alternative to the requirements of the American Society of Mechanical Engineers (ASME) Boiler and Pressure Vessel Code, Section XI, "Rules for Inservice Inspection of Nuclear Power Plant Components," 1989 Edition, no addenda, paragraphs IWC-2500 and IWD-2500 for the remainder of the second ten-year interval of the Inservice Inspection Program for Clinton Power Station (CPS) which ends December 31, 2010.

On August 28 and September 13, 2007, representatives of AmerGen and the NRC participated in conference calls to discuss the proposed relief request provided in the referenced letter. The NRC indicated that, to complete its review of the proposed relief request, additional information is required. This letter provides the requested additional information.

In accordance with the referenced letter, AmerGen requested relief based on 10 CFR 50.55a(a)(3)(i), which states that the proposed alternative would provide an acceptable level of quality and safety. The NRC pointed out during the above conference calls, however, that they believed a more appropriate basis for the requested relief was hardship under 10 CFR 50.55a(a)(3)(ii). After reviewing the regulations, AmerGen agrees that the NRC position is appropriate for this relief request and therefore, AmerGen has revised the basis for the proposed relief request to be 10 CFR 50.55a(a)(3)(ii). The revised relief request is provided as Attachment 1 to this letter and reflects the change in the basis for the proposed relief.

Attachment 3 to the referenced letter provided the acceptance criteria for the pressure decay test that AmerGen intends to use as an alternative to the examination requirements of American Society of Mechanical Engineers (ASME) Boiler and Pressure Vessel Code, Section XI Tables IWC-2500-1 and IWD-2500-1. During the conference calls, the NRC reviewer asked for the basis for the pressure decay test acceptance criteria in the referenced letter. The provided acceptance criteria are contained in the procedure CPS 9061.11, "Instrument Air Check Valve Operability and Pipe Pressure Test." AmerGen indicated that the procedure (i.e., CPS 9061.11) and its attachments contain the basis for the testing and the acceptance criteria. AmerGen agreed to provide copies of these documents for the NRC to review. The current procedure, the procedure checklists and procedure data sheet are provided as Attachments 2 through 9 to this letter.

No new regulatory commitments are established by this submittal.

If you have any questions concerning this letter, please contact Mr. Timothy A. Byam at (630) 657-2804.

Respectfully,

Jeffrey L. Hansen
Manager – Licensing

Attachments:
(1) 10 CFR 50.55a Request Number 4212, Revision 1
(2) CPS 9061.11, "Instrument Air Check Valve Operability and Pipe Pressure Test"
(3) CPS 9061.11C001, "Div. 1 SRV/IA Tests"
(4) CPS 9061.11C002, "Div. 1 IA Piping/Check Valve Tests"
(5) CPS 9061.11C003, "Div. 2 SRV/IA Tests"
(6) CPS 9061.11C004, "Div. 2 IA Piping/Check Valve Tests"
(7) CPS 9061.11C005, "Non-Div. SRV/IA Tests"
(8) CPS 9061.11C021, "FW Testable Check Valves IA Check Valves & Piping Test"
(9) CPS 9061.11D001, "Instrument Air Check Valve Operability and Piping Pressure Tests"

CLINTON POWER STATION

10 CFR 50.55a Request Number 4212, Revision 1
Proposed Alternate in Accordance with 10 CFR 50.55a(a)(3)(ii)

Hardship or Unusual Difficulty Without Compensating Increase in Level of Quality or Safety

1. ASME Code Components Affected

Class 2 Instrument Air (IA) piping and components between containment isolation valves 1IA012A/B and 1IA013A/B and check valves 1IA042A/B. This includes the following lines, valves and components shown on Clinton Power Station (CPS) Piping and Instrumentation Diagram (P&ID) M05-1040 sheet 7 not listed above.

- Lines 1IA71BA/BB-1, 1IA14GA/GB-1, 1IA95A/B-1, 1IA93AA/BA-3/4 and 1IA96AA/BA-3/4
- Valves 1IA131A/B, 1IA129A/B and the blind flanges on lines 1IA95A/B-1

Class 3 IA system piping and components requiring inspection. This includes the following IA lines and valves supplying all 16 safety relief valves (SRVs) and both Feedwater containment outboard isolation check valves.

- P&ID M05-1040 sheet 7 lines - 1IA79CA/CB-1, 1IA92AA/BA-3/4, 1IA102BA-1/2, 1IA103BA-1/2, 1IA71AA/AB-1, 1IA87A/B-1/2, 1IA125A/B-1/2, 1IA122A/B-1, 1IA88A/B-1/2, 1IA71CA/CB-1, 1IA71DA/EA/FA/GA-1/2 and 1IA71DB/EB/FB/GB/FC-1/2
- P&ID M05-1040 sheet 7 valves – 1IA075A/B, 1IA076A/B, 1IA130A/B, 1IA1170A/B, 0IA18MA/B, 1IA044A/B, 1IA1171A/B, 1IA1172A/B, 1IA096C/D and 1IA097A/B. NOTE – Strainers 1IA26FA/FB are not Code components
- P&ID M10-9002 sheet 1 lines – 1IA71DA/DB/EA/EB/FA/FB/FC-1/2, 1IA85A/B/C/D/E/F/G-1/2, 1MS71CE/DE-1/2, 1MS72AE/BE-1/2, 1MS73BE/CE-1/2, 1MS74CE-1/2, 1MS71CG/DG-3/4, 1MS72AG/BG-3/4, 1MS73BG/CG-3/4, 1MS74CG-3/4, 1MS71CH/DH-1/2, 1MS72AH/BH-1/2, 1MS73BH/CH-1/2, 1MS74CH-1/2, 1MS71CF/DF-3/4, 1MS72AF/BF-3/4, 1MS73BF/CF-3/4, 1MS74CF-3/4, 1MS71CC/DC-2, 1MS72AC/BC-2, 1MS73BC/CC-2, 1MS74CC-2, 1MS71CJ/CK/DJ/DK-1 1/4, 1MS72AJ/AK/BJ/BK-1 1/4, 1MS73BJ/BK/CJ/CK-1 1/4 and 1MS74CJ/CK-1 1/4
- P&ID M10-9002 sheet 1 valves - 1IA094A/B/C/D/E/F/G, 1B21-F039B/C/D/E/H/K/S, 1B21-F331C/D, 1B21-F332A/B, 1B21-F333B/C, 1B21-F334, valves 'G' on M10-9002-sheet1 and 1B21-F082B/C/D/E/H/K/S
- P&ID M10-9002 sheet 1 accumulators - 1B21-A003B/C/D/E/H/K/S
- P&ID M10-9002 sheet 2 lines – 1IA71GA/GB-1/2, 1IA86C/E-1/2, 1MS75AE/BE-1/2, 1MS76CE/DE-1/2, 1MS77AE/CE/DE-1/2, 1MS78BE/CE-1/2, 1MS75AC/BC-2, 1MS76CC/DC-2, 1MS77AC/CC/DC-2, 1MS78BC/CC-2, 1MS75AG/AH/BG/BH-1 1/4, 1MS76CG/CH/DG/DH-1 1/4, 1MS77AG/AH/CG/CH/DG/DH-1 1/4 and 1MS78BG/BH/CG/CH-1 1/4

- P&ID M10-9002 sheet 2 valves – 1IA095C/E, 1B21-F036 A/F/G/J/L/M/N/P/R and 1B21-F081A/F/G/J/L/M/N/P/R
- P&ID M10-9002 sheet 2 accumulators - 1B21-A004A/F/G/J/L/M/N/P/R
- P&ID M10-9004 sheet 8 lines – 1FW26BA/BB – 1/2, 1FW27BA/BB-1/2, 1FW26CA/CB-2 and 1FW28AA/AB-3/4
- P&ID M10-9004 sheet 8 valves – 1B21-F433A/B and 1B21-F492A/B.
- P&ID M10-9004 sheet 8 accumulators – 1B21-A300A/B

2. Applicable Code Edition and Addenda

American Society of Mechanical Engineers (ASME) Boiler and Pressure Vessel Code, Section XI, "Rules for Inservice Inspection of Nuclear Power Plant Components," 1989 Edition, no addenda, paragraphs IWC-2500 and IWD-2500.

3. Applicable Code Requirement

ASME Section XI, paragraphs IWC-2500 and IWD-2500, state that components shall be examined and pressure tested as specified in Tables IWC-2500-1 and IWD-2500-1. Tables IWC-2500-1 and IWD-2500-1 require performance of VT-2 visual examinations during system pressure tests.

Examination Categories:	Class 2 – C-H, All Pressure Retaining Components Class 3 - D-A, Systems in Support of Reactor Shutdown Function
Item Numbers:	Class 2 – C7.30, Piping and Pressure Retaining Components and C7.70, Valves and Pressure Retaining Components Class 3 - D1.10, Pressure Retaining Components

4. Reason for Request

Performance of a VT-2 visual examination would require applying a leak detection solution to a large amount of piping and components, many of which are in elevated dose rate areas with limited access. VT-2 inspections would result in additional radiation exposure (estimated 2 Rem) and industrial safety challenges without any added benefit in the level of quality and safety. These inspections would not be consistent with As Low As Reasonably Achievable (ALARA) practices.

Relief is requested from the performance of system pressure tests and VT-2 visual examination requirements specified in Tables IWC-2500-1 and IWD-2500-1 for all Class 2 IA piping and the Class 3 IA piping supplying all SRVs and both Feedwater containment outboard isolation check valves.

5. Proposed Alternative and Basis for Use

As an alternative to the examination requirements of Tables IWC-2500-1 and IWD-2500-1, CPS will perform pressure decay testing on the Class 2 and 3 IA piping supplying all 16 SRVs and both Feedwater containment outboard isolation check valves as required in surveillance procedure CPS 9061.11, "Instrument Air Check Valve Operability and Pipe Pressure Test."

Pursuant to 10 CFR 50.55a(a)(3)(ii), relief is requested on the basis that compliance with the specified requirements would result in hardship or unusual difficulty without a compensating increase in the level of quality and safety.

Surveillance procedure CPS 9061.11, verifies the operability of SRV actuation capability and check valves in the IA supply lines to all 16 SRVs and both Feedwater containment outboard isolation check valves. This surveillance test is performed for each individual SRV and both Feedwater containment outboard isolation check valves as a requirement of the CPS Inservice Testing (IST) program. One specific test this surveillance performs, is a pressure decay test of the SRV and Feedwater containment outboard isolation check valve accumulators, as well as associated piping and valves. The pressure decay test is performed by isolating and pressurizing these accumulators and associated piping to the nominal operating pressure. The decay in pressure is then monitored through calibrated pressure measuring instrumentation. If any pressure decay acceptance criterion (see Attachment 3) is exceeded, the surveillance identifies appropriate troubleshooting steps to perform, including soap-bubble application to locate leakage.

The pressure decay test performed as part of CPS 9061.11 identifies any degradation of the Class 2 and 3 ADS supply piping and the SRV and Feedwater containment outboard isolation check valve accumulators and associated piping. The volume tested by this surveillance encompasses all piping and components requiring testing under ASME Section XI for these portions of the IA system. This surveillance is performed on a greater frequency than that required in Tables IWC-2500-1 or IWD-2500-1 and the test pressure is consistent with the pressure requirements of both tables. Thus, the testing performed during this surveillance will provide the same level of quality and safety as the pressure testing and VT-2 visual examination requirements of Tables IWC-2500-1 and IWD-2500-1.

The VT-2 visual examination described in Tables IWC-2500-1 and IWD-2500-1 and performed once per inspection period, would not provide an increase in safety, system reliability, or structural integrity. In addition, performance of a VT-2 visual examination would require applying a leak detection solution to a large amount of piping and components, many of which are in elevated dose rate areas with limited access. VT-2 inspections would result in additional radiation exposure (estimated 2 Rem) and industrial safety challenges without any added benefit in the level of quality and safety. These inspections would not be consistent with As Low As Reasonably Achievable (ALARA) practices.

In summary, relief is requested from the performance of system pressure tests and VT-2 visual examination requirements specified in Tables IWC-2500-1 and IWD-2500-1 for the Class 2 and 3 IA system piping and components identified in this request on the basis that compliance with the specified requirements would result in hardship or unusual difficulty without a compensating increase in the level of quality and safety.

6. Duration of Proposed Alternative

Relief is requested for the remainder of the second ten-year interval of the Inservice Inspection Program for CPS, Unit 1 which ends December 31, 2010.

7. Precedents

A similar request was made by Exelon Generation Company, LLC for the LaSalle County Station (Reference 1) and subsequently approved by the NRC (Reference 2).

8. References

1. Letter from Mr. C. G. Pardee (Exelon Generation Company, LLC) to the U. S. NRC, "LaSalle County Station Relief Requests PR-08 and PR-10, Alternates to the Examination Requirements of the American Society of Mechanical Engineers Boiler and Pressure Vessel Code, Section XI, "Rules for Inservice Inspection of Nuclear Power Plant Components," 1989 Edition, Table IWC-2500-1," dated December 21, 2001
2. Letter from U. S. NRC to Mr. J. L. Skolds (Exelon Generation Company, LLC), "LaSalle County Station, Units 1 and 2 – Relief Requests PR-08 and PR-10 (TAC Nos. MB3780 and MB3781)," dated June 28, 2002
3. American Society of Mechanical Engineers (ASME) Boiler and Pressure Vessel (B&PV) Code, Section XI, "Rules for Inservice Inspection of Nuclear Power Plant Components," 1989 Edition, No Addenda, Subsection Tables IWC-2500-1 and IWD-2500-1

ATTACHMENT 2

CPS 9061.11
"Instrument Air Check Valve Operability and Pipe Pressure Test"

INSTRUMENT AIR CHECK VALVE OPERABILITY AND PIPE PRESSURE TEST

SCOPE OF REVISION:

- Total rewrite sections 8.1 - 8.9, and 8.17 - rev. marks not used (Specific Rev. 40a dispositioned in rewrite):

  Consolidation of C001-C012 & C022 procedure sections relating to SRV Actuations into a stand alone checklists C001-C005, including all data collection.
  - ITS amendment (U-603495) eliminates requirement to open each SRV in ITS SR 3.4.4.3, 3.5.1.7, 3.6.1.6.1. Verification of actuator stroking is the new ITS METHOD 2 criteria. Slow closure rig in no longer required.
  - Updated applicable items to reflect the ITS change and the ISI relief request #2204 for eliminating SRV stroke time/position verifications.
  - All previous LSF overlaps are still satisfied.

❶ Specific rev 41a [Sheffield]: - CCF [Rohrscheib]:
Deleted sections 8.12, 8.15 (Open tests of MSIV IA Accumulator Supply Check valves) and 8.16 (duplicate steps performed per 9861.05D013 and 9861.05D014). C1R10 24 month cycle ITS project.

❷ Specific rev 41b [Jeans]: - CA 528352
Re-institute testing of Feedwater check valves (8.16) previously deleted.

CONTINUOUS USE

ORIGINATOR: *Thomas J. Landin* **CLASS CODE:** *SNNI*

SQR: *Dale Shelton* **APPROVAL DATE:** *APR 01 2002*

CURRENT CHANGES TO GENERAL REVISION

	Change #	Date	List of Affected Pages
❶	41a	11/03/05	1, 2, 4, 5, 7, 10, 14, 17, 18, 22, 25, 26, 29
❷	41b	10/25/07	1,2,4,5,7,27,28,32
❸			
❹			
❺			

TABLE OF CONTENTS
(Section 8.0 only)

			PAGE
⓪	8.1	Div 1 SRV/IA Tests	9
	8.2	Div 1 IA Piping/Check Valve Tests	9
	8.3	Div 2 SRV/IA Tests	9
	8.4	Div 2 IA Piping/Check Valve Tests	9
	8.5	Non-Div SRV/IA Tests	9
	8.6 - 8.9	Deleted	
	8.10	Pressure Test of Inboard MSIV IA Piping	10
	8.11	Inboard MSIV IA Check Valve, 1B21-F024A(B,C,D) Close Test	14
❶	8.12	Deleted	
	8.13	Pressure Test of Outboard MSIV IA Piping	18
	8.14	Outboard MSIV IA Check Valve, 1B21-F029A(B,C,D) Close Test	22
❶	8.15	Deleted	
❶❷	8.16	FW Testable Check Valves IA Check Valves & Piping Test	27
	8.17	Notifications	29

1.0 **PURPOSE**

0 1.1 Verify the operability of SRV actuation capability; and check valves in the Instrument Air supply lines to the Main Steam Isolation Valves (MSIV), Safety Relief Valves (SRV), and the Feedwater Testable Check Valves.

This procedure fully satisfies the requirements of:

ITS SR's 3.4.4.2,
3.4.4.3,
3.5.1.7,
3.6.1.6.1:

Verifying each SRV valve actuator strokes when manually actuated (Method 2) using the "A" and "B" solenoids.

SSER 5: Leak testing ADS air supply check valves and pneumatic actuators

NRC GL 89-04: Full Flow Exercise of designated check valves in the IA supply lines

ISI/IST Program Test Parameters:

Pressure Test of ASME Class 3 piping which supplies Instrument Air to the SRVs

Pressure Test of ASME Class 3 piping which supplies Instrument Air to the MSIVs

Pressure Test of ASME Class 3 piping which supplies Instrument Air to the FW Check Valves

This procedure partially satisfies the requirements of:

ITS SR 3.3.3.2.2: Verifying each RSP SRV control circuit and transfer switch is capable of performing it's intended function.

☞ Use of this procedures satisfies CPS 9027.01C006 - Section 8.6.1 for SRV Actuation Testing.

ITS SR's 3.3.5.1.5 T4.a - T4.h,
3.3.5.1.5 T5.a - T5.g,
3.3.6.5.4,
3.5.1.6,
3.6.1.6.2: (LSF overlaps)

Verifying each SRV valve actuator strokes when manually actuated (Method 2) using the "A" and "B" solenoids.

ORM TR 4.5.2.2: MOV Thermal O/L Prot Bypassed

2.0 DISCUSSION/DEFINITIONS

2.1 Discussion

2.1.1 FREQUENCY

1. NORMAL FREQUENCY

01 1) Each refueling cycle perform:

a) C001/C003: 8.1, 8.2, 8.3, 8.4
b) C002/C004: 8.2
c) C005: 8.1, 8.2
2 d) 8.11, 8.14, 8.16

01 2) Every alternate refueling:

a) C002/C004: 8.1
b) 8.10, 8.13

2. OTHER TRIGGERS

1) Each Refueling Outage - For valve exercises and Pressure Drop per ISI Program.

2) Prior to returning a valve to service after maintenance, repair or replacement work is performed on the valve.

2.1.2 ISI Requirements for MSIV, FW check valves, and non-ADS SRV IA supply check valves is to exercise the check valve (closed).

Normally open check valves are verified closed by ensuring accumulators are not exhausting air through the check valve(s) by performance of a pressure drop test.

2.1.3 Two of the nine Non-ADS SRVs, 1B21-F051C and 1B21-F051D, have their actuation air supplied from DIV I & DIV II IA which also supplies the ADS SRVs.

The IA check valves for these two valves are tested with the ADS SRV IA check valves and their test data is recorded on the same steps as the ADS SRV IA check valves.

2.1.4 The IA supply line check valves 1IA042A(B) are exercised (closed) per the ISI program.

This is done with a pressure drop test that does not constitute a leak rate test for containment isolation function.

2.1.5 The following components are tested by this surveillance:

IA Pipe Press Tests

1B21-F022 / F028 A,B,C,D supply piping
1B21-F032A,B supply piping

1B21-F041A / F041B / F041C/ F041D / F041F / F041G / F041L
F047A / F047B / F047C / F047D / F047F
F051B / F051C / F051D / F051G

Div 1/2 ADS & NON ADS AIR HDR

IA Chk Vlv Open Exercise/Flow Tests

1B21-F036P / F036R
1B21-F039B / F039C / F039D / F039E / F039H / F039K / F039S
1IA042A, B

❶

IA Chk Vlv Close Exercise and Press Drop Test

1B21-F024A,B,C,D
1B21-F029A,B,C,D
1B21-F036A,G,F,J,L,N,M
1B21-F039B,D,E, 1B21-F036R
1B21-F039C,H,S,K, 1B21-F036P
❶ 1IA042A, B
❷ 1B21-F433A/B

IA Chk Vlv Leak Rate (closed)

1B21-F039C,H,S,K, 1B21-F036P
1B21-F039B,D,E, 1B21-F036R

2.1.4 The check valves are verified closed using the following general steps:

1. A test gauge and valve is installed downstream of the check valve.
2. Air is isolated upstream of the check valve.
3. Air is bled off between the isolation valve and the check valve.
4. The gauge is monitored to verify the check valve is closed. This constitutes a leak rate test of the ADS air supply check valves.

2.1.5 The SRV check valves are verified open via quantitative data obtained from a flow meter:

1. Air is isolated upstream of the check valve.
2. The test gauge valve is opened to decrease pressure in the accumulator.
3. The air supply is opened and the flow meter monitored "full flow" requirement.

2.1.6 Portions of this surveillance may be performed independently for post maintenance testing, to facilitate inspections due to repairs, etc.

0 2.1.7 This procedure satisfies the requirements of SSER 5 to perform two leak tests of the ADS air supply check valves and pneumatic actuators.

2.2 **Definitions**

2.2.1 ADS - Automatic Depressurization System

2.2.2 SRV - Safety Relief Valve

3.0 **RESPONSIBILITY**

3.1 Operations Department Head is responsible for implementation and review of this procedure.

3.2 Director - Plant Engineering is responsible for determining corrective action for Pipe Pressure test failures.

4.0 **PRECAUTIONS**

4.1 List of Annunciators to expect during 9061.11.

0 See - 5041-7B/5040-6F/5067-7L/5041-7G/5063-6A

5.0 **PREREQUISITES**

5.1 (Initial) In conjunction with the SMngt, review the following impact statements to determine required plant status to perform this test:

TECH SPEC FUNCTIONS IMPACTED - None

RPS TRIP - None

CRVICS ISOLATION - None

LOGIC TYPE - N/A

MINIMUM OPERABLE CHANNELS - N/A

PLANT/SYSTEM CONDITIONS REQUIRED TO CONDUCT THIS TEST

- Mode 4 or 5
- SRVs will not be available for alternate Shutdown Cooling use as follows:

❍

OTHER SYSTEMS AFFECTED: N/A

❍

OTHER CHANNELS REQUIRED OPERABLE TO PREVENT INADVERTENT ACTUATION: N/A

5.2 (Initial) Plant Air System is in Operation as per CPS 3214.01, Plant Air (IA & SA), or CPS 3214.03, Temporary Service Air.

❶ 5.3 (Initial) The Reactor vessel is depressurized (for sections 8.1 thru 8.14).

5.4 (Initial) The MSIVs are closed as necessary.

❶❷ 5.5 (Initial) Feedwater System is Shutdown (for section 8.16)

❶ 5.6 (Initial) The drywell has been evaluated to be accessible as per CPS 1905.32, Initial Drywell Entries, (for sections 8.1 thru 8.11).

5.7 (Initial) Generate a CPS 1512.01F007, Post Calibration Check Sheet, for each instrument listed in 7.0.

5.8 (Initial) Check the calibration due date of test equipment to be used, to ensure calibration is up-to-date.

5.9 (Initial) Communications established as necessary.

5.10 (Initial) Obtain permission from SM/CRS to perform this procedure.

6.0 **LIMITATIONS**

6.1 This test must be performed when operability of the MSIVs, ADS, Safety Relief or Feedwater Testable Check Valves are not required.

If it becomes necessary to operate these valves, the test shall be suspended and the system returned to normal.

6.2 Operation of MOV Test Prep Switch should be IAW OP-CL-101-301-1001 and ORM 2.5.2 minimize time MOV Test Prep Switches are in test.

7.0 **MATERIALS/TEST EQUIPMENT**

0 7.1 (Record) Stopwatch
[Range: 0 - 40 min, Accuracy: ± 0.10 sec/40 min, Minor Divisions: N/A; or equivalent stopwatch.]

7.2 Pressure gauges

1. (Record) Nine 0-200 psig test gauges (± 0.25% accuracy with 1 psig increments) or equivalent and valves (see below).
2. (Record) One 0-2500 psig 16" Heise gauge (± 2.5 psig accuracy with 1 psig resolution) or equivalent and valves (see below).

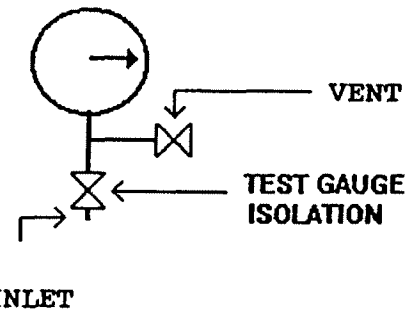

0 7.3 Snoop Leak Detection Solution

7.5 (Record) A flow meter capable of measuring 10-30 SCFM, ±2% accuracy or equivalent.

7.6 Pipe wrench

7.7 Set of combination wrenches

7.8 Flash light

8.0 **PROCEDURE**

0 8.1 **Div 1 SRV/IA Tests**

Perform per CPS 9061.11C001, Div 1 SRV/IA Tests.

0 8.2 **Div 1 IA Piping/Check Valve Tests**

Perform per CPS 9061.11C002,
Div 1 IA Piping/Check Valve Tests.

0 8.3 **Div 2 SRV/IA Tests**

Perform per CPS 9061.11C003, Div 2 SRV/IA Tests.

0 8.4 **Div 2 IA Piping/Check Valve Tests**

Perform per CPS 9061.11C004,
Div 2 IA Piping/Check Valve Tests.

0 8.5 **Non-Div SRV/IA Tests**

Perform per CPS 9061.11C005, Non-Div SRV/IA Tests.

0 8.6 Deleted

0 8.7 Deleted

0 8.8 Deleted

0 8.9 Deleted

NOTE

Sections 8.10 and 8.11 are written such that they may be performed either independently or one after another. If 8.10 is to be done independently use C013, if both are to be done use C016.

CAUTION

1) *Prerequisite 5.1 contains lists of components which will lose IA supply air in addition to SRVs and MSIVs.*

2) *When 1IA099, INST AIR ISOL TO MSIVs and SRVs is closed, non-ADS SRVs will be unavailable for alternate shutdown cooling use.*

8.10 **Pressure Test of Inboard MSIV IA Piping**

8.10.1 (Initial) Close 1IA099, INST AIR ISOL TO MSIVs & SRVs.

8.10.2 (Initial) Close the following:

1. 1IA077A, 1B21-F022A IA ISOL
2. 1IA077B, 1B21-F022B IA ISOL
3. 1IA077C, 1B21-F022C IA ISOL
4. 1IA077D, 1B21-F022D IA ISOL

8.10.3 (Initial) Remove pipe cap and slowly open 1IA942K, INST AIR TEST CONN DRYWELL and observe IA SUPPLY HDR depressurizes:

1. Check 1IA942K CLOSED.
2. Remove pipe cap.
3. 1IA942K slowly opened.

8.10.4 (Initial) Notify the RO/CRS that a test gauge will be installed at:

1. 1IA092A, 1B21-F022A IA INSTR TAP ISOL
2. 1IA092B, 1B21-F022B IA INSTR TAP ISOL
3. 1IA092C, 1B21-F022C IA INSTR TAP ISOL
4. 1IA092D, 1B21-F022D IA INSTR TAP ISOL

8.10.5 (Initial) Verify the valve is shut, remove the pipe cap, CONCURRENTLY VERIFY and install the test gauge at:

1. 1IA092A, closed
   Pipe cap removed
   Test instrument installed

2. 1IA092B, closed
   Pipe cap removed
   Test instrument installed

3. 1IA092C, closed
   Pipe cap removed
   Test instrument installed

4. 1IA092D, closed
   Pipe cap removed
   Test instrument installed

8.10.6 (Initial) Open the following valves:

1. 1IA092A, 1B21-F022A IA INSTR TAP ISOL
   Test gauge isolation valve
2. 1IA092B, 1B21-F022B IA INSTR TAP ISOL
   Test gauge isolation valve
3. 1IA092C, 1B21-F022C IA INSTR TAP ISOL
   Test gauge isolation valve
4. 1IA092D, 1B21-F022D IA INSTR TAP ISOL
   Test gauge isolation valve

8.10.7 (Record) Record the gauge EIN and pressure from the test gauge for each supply pipe being tested.

8.10.8 (Initial) Test period start:

1. Start the stopwatch.

2. Close test gauge isolation valve at:
   - 1IA092A
   - 1IA092B
   - 1IA092C
   - 1IA092D

8.10.9 (Record) (Initial) After time specified in CPS 9061.11D001 has elapsed:

1. Open test gauge isolation valve at:
   - 1IA092A
   - 1IA092B
   - 1IA092C
   - 1IA092D
2. Record final pressure.
3. Record elapsed time.

8.10.10 (Record) Calculate the pressure drop and record the solution using the formula below:

Pressure (8.10.7) - Pressure (8.10.9)

8.10.11 (Initial) Open the vent valve on the pressure gauge assembly. Remove the test gauge when the header is depressurized.

1. 1IA092A, 1B21-F022A IA INSTR TAP ISOL test gauge removed.
2. 1IA092B, 1B21-F022B IA INSTR TAP ISOL test gauge removed.
3. 1IA092C, 1B21-F022C IA INSTR TAP ISOL test gauge removed.
4. 1IA092D, 1B21-F022D IA INSTR TAP ISOL test gauge removed.

8.10.12 (Initial) Notify the RO/CRS that the test gauge is removed from:

1. 1IA092A, 1B21-F022A IA INSTR TAP ISOL
2. 1IA092B, 1B21-F022B IA INSTR TAP ISOL
3. 1IA092C, 1B21-F022C IA INSTR TAP ISOL
4. 1IA092D, 1B21-F022D IA INSTR TAP ISOL

NOTE

If continuing directly to section 8.11 then the next four steps may be N/A.

8.10.13 (Initial) Close the IA INST TAP ISOL VALVE and replace its pipe cap:

1. 1IA092A, 1B21-F022A IA INSTR TAP ISOL, close
   Pipe cap installed

2. 1IA092B, 1B21-F022B IA INSTR TAP ISOL, close
   Pipe cap installed

3. 1IA092C, 1B21-F022C IA INSTR TAP ISOL, close
   Pipe cap installed

4. 1IA092D, 1B21-F022D IA INSTR TAP ISOL, close
   Pipe cap installed

8.10.14 (Initial) Close 1IA942K, INST AIR TEST CONN DRYWELL and replace pipe cap.

1. 1IA942K closed.

2. Pipe cap installed.

8.10.15 (Initial) Open the INST AIR SUPPLY VALVE listed below:

1. 1IA077A, IA TO 1B21-F022A

2. 1IA077B, IA TO 1B21-F022B

3. 1IA077C, IA TO 1B21-F022C

4. 1IA077D, IA TO 1B21-F022D

8.10.16 (Initial) Slowly Open 1IA099, INST AIR ISOL TO MSIVs & SRVs.

NOTE

Sections 8.10 and 8.11 are written such that they may be performed either independently or one after another. If 8.11 is to be done independently use C014, if both are to be done use C016.

CAUTION

1) *Prerequisite 5.1 contains lists of components which will lose IA supply air in addition to SRVs and MSIVs.*

2) *When 1IA099, INST AIR ISOL TO MSIVs and SRVs is closed, non-ADS SRVs will be unavailable for alternate shutdown cooling use.*

8.11 **Inboard MSIV IA Check Valve, 1B21-F024A(B,C,D) Close Test**

NOTE

If continuing directly from section 8.10 and steps 8.10.13 through 8.10.16 were N/A, then the next four steps may be N/A.

8.11.1 (Initial) Close 1IA099, INST AIR ISOL TO MSIVs & SRVs.

8.11.2 (Initial) Close the following:

1. 1IA077A, IA TO 1B21-F022A
2. 1IA077B, IA TO 1B21-F022B
3. 1IA077C, IA TO 1B21-F022C
4. 1IA077D, IA TO 1B21-F022D

8.11.3 (Initial) IA header depressurization:

1. Verify 1IA942K, IA CAPPED CONN (VENT) is closed.
2. Remove pipe cap and
3. SLOWLY open 1IA942K, IA CAPPED CONN (VENT),
4. Observe IA Supply Header depressurizes.

8.11.4 (Initial) Verify IA INST TAP ISOL VALVE Closed, remove the pipe cap, and Slowly Open valve to depressurize air header:

1. 1IA092A, 1B21-F022A IA INST TAP ISOL, Closed
   Pipe cap removed
   1IA092A, 1B21-F022A IA INST TAP ISOL, Open

2. 1IA092B, 1B21-F022B IA INST TAP ISOL, Closed
   Pipe cap removed
   1IA092B, 1B21-F022B IA INST TAP ISOL, Open

3. 1IA092C, 1B21-F022C IA INST TAP ISOL, Closed
   Pipe cap removed
   1IA092C, 1B21-F022C IA INST TAP ISOL, Open

4. 1IA092D, 1B21-F022D IA INST TAP ISOL, Closed
   Pipe cap removed
   1IA092D, 1B21-F022D IA INST TAP ISOL, Open

8.11.5 (Initial) Notify the RO/CRS that a test gauge will be installed at:

1. 1B21F083A, INBD MSIV A INST AIR DRAIN

2. 1B21F083B, INBD MSIV B INST AIR DRAIN

3. 1B21F083C, INBD MSIV C INST AIR DRAIN

4. 1B21F083D, INBD MSIV D INST AIR DRAIN

8.11.6 (Initial) Verify the valve is closed, remove the pipe cap, CONCURRENTLY VERIFY and install the test pressure gauge at:

1. 1B21-F083A, closed
   Pipe cap removed
   Test instrument installed
   1B21-F083A, opened

2. 1B21-F083B, closed
   Pipe cap removed
   Test instrument installed
   1B21-F083B, opened

3. 1B21-F083C, closed
   Pipe cap removed
   Test instrument installed
   1B21-F083C, opened

4. 1B21-F083D, closed
   Pipe cap removed
   Test instrument installed
   1B21-F083D, opened

8.11.7 (Initial) Slowly open the test pressure gauge isolation valve installed at:

1. 1B21F083A, INBD MSIV A INST AIR DRAIN

2. 1B21F083B, INBD MSIV B INST AIR DRAIN

3. 1B21F083C, INBD MSIV C INST AIR DRAIN

4. 1B21F083D, INBD MSIV D INST AIR DRAIN

8.11.8 (Record) Record the gauge EIN and pressure from the test gauge for the check valve being tested.

8.11.9 (Initial) Test period start:

1. Start the stopwatch.

2. Close test gauge isolation valve at:

   - 1B21-F083A
   - 1B21-F083B
   - 1B21-F083C
   - 1B21-F083D

8.11.10 (Record) (Initial) After the time specified on CPS 9061.11D001 has elapsed:

1. Open test gauge isolation valve at:

   - 1B21-F083A
   - 1B21-F083B
   - 1B21-F083C
   - 1B21-F083D

2. Record final pressure from test gauge

3. Record elapsed time

8.11.11 (Record) Calculate the pressure drop and record the solution using the formula below:

Pressure (8.11.8) - Pressure (8.11.10)

8.11.12 (Initial) Close the following valves and replace pipe caps:

1. 1IA092A, 1B21-F022A IA INSTR TAP ISOL, closed
   Pipe cap replaced

2. 1IA092B, 1B21-F022B IA INSTR TAP ISOL, closed
   Pipe cap replaced

3. 1IA092C, 1B21-F022C IA INSTR TAP ISOL, closed
   Pipe cap replaced

4. 1IA092D, 1B21-F022D IA INSTR TAP ISOL, closed
   Pipe cap replaced

8.11.13 (Initial) Close 1IA942K, INST AIR TEST CONN DRYWELL, and replace pipe cap.

1. 1IA942K, closed
2. Pipe cap replaced

8.11.14 (Initial) Slowly Open 1IA099, INST AIR ISOL TO MSIVs & SRVs.

8.11.15 (Initial) Close the valve listed below, remove the test gauges, and replace pipe cap.

1. 1B21F083A, INBD MSIV A INST AIR DRAIN, closed
   Test gauge removed
   Pipe cap replaced

2. 1B21F083B, INBD MSIV B INST AIR DRAIN, closed
   Test gauge removed
   Pipe cap replaced

3. 1B21F083C, INBD MSIV C INST AIR DRAIN, closed
   Test gauge removed
   Pipe cap replaced

4. 1B21F083D, INBD MSIV D INST AIR DRAIN, closed
   Test gauge removed
   Pipe cap replaced

8.11.16 (Initial) Notify the RO/CRS that the test gauge is removed from:

1. 1B21F083A, INBD MSIV A INST AIR DRAIN
2. 1B21F083B, INBD MSIV B INST AIR DRAIN
3. 1B21F083C, INBD MSIV C INST AIR DRAIN
4. 1B21F083D, INBD MSIV D INST AIR DRAIN

8.11.17 (Initial) Slowly Open the INST AIR SUPPLY VALVE listed below:

1. 1IA077A, IA TO 1B21-F022A
2. 1IA077B, IA TO 1B21-F022B
3. 1IA077C, IA TO 1B21-F022C
4. 1IA077D, IA TO 1B21-F022D

8.12 Deleted

NOTE

Sections 8.13 and 8.14 are written such that they may be performed either independently or one after another. If 8.13 is to be done independently use C017, if both are to be done use C020.

8.13 **Pressure Test of Outboard MSIV IA Piping**

8.13.1 1. (Initial) Notify Radwaste that the 1WX01PA,B RWCU F/D BACKWASH TANK PUMPS should be removed from service until further notification due to loss of air to 1WX020, OUTBOARD CONT ISOLATION in the following steps.

2. (Initial) Notify the RO/CRS that 1G33-F041, DRN FLOW TO CDSR BYPASS will be out-of-service until further notification due to loss of air.

8.13.2 (Initial) Unlock and close 1IA327, IA to Aux Building STEAM TUNNEL HDR ISOL

8.13.3 (Initial) Close the INST AIR SUPPLY VALVE:

1. 1IA083H, IA TO MSIV 28A

2. 1IA083B, IA TO MSIV 28B

3. 1IA083G, IA TO MSIV 28C

4. 1IA083A, IA TO MSIV 28D

8.13.4 (Initial) Verify open 1IA881A, INST AIR ISOL TO 1B21-F032A.

8.13.5 (Initial) Header depressurization:

1. Verify 1IA127A, INST AIR TEST CONN is closed.

2. Remove pipe cap at 1IA127A, INST AIR TEST CONN.

3. Slowly open 1IA127A.

4. Observe IA SUPPLY HEADER depressurizes.

8.13.6 (Initial) Notify the RO/CRS that a test gauge will be installed at:

1. 1IA134A, 1B21-F028A IA INSTR TAP ISOL

2. 1IA134B, 1B21-F028B IA INSTR TAP ISOL

3. 1IA134C, 1B21-F028C IA INSTR TAP ISOL

4. 1IA134D, 1B21-F028D IA INSTR TAP ISOL

8.13.7 (Initial) Verify the valve is shut, remove the pipe cap, CONCURRENTLY VERIFY and install the test gauge at:

1. 1IA134A, closed
   Pipe cap removed
   Test instrument installed

2. 1IA134B, closed
   Pipe cap removed
   Test instrument installed

3. 1IA134C, closed
   Pipe cap removed
   Test instrument installed

4. 1IA134D, closed
   Pipe cap removed
   Test instrument installed

8.13.8 (Initial) Open the following valves:

1. 1IA134A, 1B21-F028A IA INSTR TAP ISOL
   Test gauge isolation valve

2. 1IA134B, 1B21-F028B IA INSTR TAP ISOL
   Test gauge isolation valve

3. 1IA134C, 1B21-F028C IA INSTR TAP ISOL
   Test gauge isolation valve

4. 1IA134D, 1B21-F028D IA INSTR TAP ISOL
   Test gauge isolation valve

8.13.9 (Record) Record the gauge EIN and pressure from the test gauge for each supply pipe being tested.

8.13.10 (Initial) Test period start:

1. Start the stopwatch.

2. Close test gauge isolation valve at:

   - 1IA134A
   - 1IA134B
   - 1IA134C
   - 1IA134D

8.13.11 (Record)(Initial) After time specified in CPS 9061.11D001 has elapsed:

1. Open test gauge isolation valve at:

   - 1IA134A
   - 1IA134B
   - 1IA134C
   - 1IA134D

2. Record final pressure from test gauge.

3. Record elapsed time.

8.13.12 (Record) Calculate the pressure drop and record the solution using the formula below:

Pressure (8.13.9) - Pressure (8.13.11)

8.13.13 (Initial) Test gauge removal:

1. Open the vent valve on the pressure gauge assembly.

2. Remove the test gauge from the following valves when the header is depressurized.

   1) 1IA134A, 1B21-F028A IA INSTR TAP ISOL
      Test gauge removed.

   2) 1IA134B, 1B21-F028B IA INSTR TAP ISOL
      Test gauge removed.

   3) 1IA134C, 1B21-F028C IA INSTR TAP ISOL
      Test gauge removed.

   4) 1IA134D, 1B21-F028D IA INSTR TAP ISOL
      Test gauge removed.

3. (Initial) Notify the RO/CRS that the test gauge is removed from:

   1) 1IA134A, 1B21-F028A IA INSTR TAP ISOL

   2) 1IA134B, 1B21-F028B IA INSTR TAP ISOL

   3) 1IA134C, 1B21-F028C IA INSTR TAP ISOL

   4) 1IA134D, 1B21-F028D IA INSTR TAP ISOL

NOTE

If continuing directly to section 8.14, steps 8.13.14 through 8.13.18 may be N/A.

8.13.14 (Initial) Close the IA INSTR TAP ISOL Valve and install pipe cap.

1. 1IA134A, 1B21-F028A IA INSTR TAP ISOL, Closed Pipe cap installed.

2. 1IA134B, 1B21-F028B IA INSTR TAP ISOL, Closed Pipe cap installed.

3. 1IA134C, 1B21-F028C IA INSTR TAP ISOL, Closed Pipe cap installed.

4. 1IA134D, 1B21-F028A IA INSTR TAP ISOL, Closed Pipe cap installed.

8.13.15 (Initial) Close 1IA127A and install the pipe cap.

8.13.16 (Initial) Open the INST AIR SUPPLY VALVE:

1. 1IA083H, IA TO MSIV 28A

2. 1IA083B, IA TO MSIV 28B

3. 1IA083G, IA TO MSIV 28C

4. 1IA083A, IA TO MSIV 28D

8.13.17 (Initial) Slowly Open and Lock 1IA327, IA TO AUX BUILDING STEAM TUNNEL HDR ISOL.

8.13.18 (Initial) Notify the following:

1. Notify Radwaste that 1WX01PA,B operations may be returned to normal.

2. Notify Operations that 1G33-F041, DRN FLOW TO CDSR BYPASS may be returned to service.

❶

NOTE

Sections 8.13 and 8.14 are written such that they may be performed either independently or one after another. If 8.14 is to be done independently use C018, if both are to be done use C020.

8.14 **Outboard MSIV IA Check Valve, 1B21-F029A(B,C,D) Close Test**

NOTE

If continuing directly from section 8.13 and steps 8.13.14 through 8.13.18 were N/A then the following five steps may be N/A.

8.14.1 1. (Initial) Notify Radwaste that the 1WX01PA,B RWCU F/D BACKWASH TANK PUMPS should be removed from service until further notification due to loss of air to 1WX020, OUTBOARD CONT ISOLATION in the following steps.

2. (Initial) Notify the RO/CRS that 1G33-F041, DRN FLOW TO CDSR BYPASS will be out-of-service until further notification due to loss of air.

8.14.2 (Initial) Unlock and Close 1IA327, IA TO AUX BUILDING STEAM TUNNEL HDR ISOL.

8.14.3 (Initial) Close the INST AIR SUPPLY VALVE:

1. 1IA083H, IA TO MSIV 28A
2. 1IA083B, IA TO MSIV 28B
3. 1IA083G, IA TO MSIV 28C
4. 1IA083A, IA TO MSIV 28D

8.14.4 (Initial) Header depressurization:

1. Verify Open 1IA881A, INST AIR ISOL TO B21-F032A
2. Verify 1IA127A, INST AIR TEST CONN is closed.
3. Remove pipe cap at 1IA127A, INST AIR TEST CONN.
4. Slowly open 1IA127A.
5. Observe IA SUPPLY HEADER depressurizes.

8.14.5 (Initial) Verify Closed, remove the pipe cap, and Slowly Open valve to depressurize air header:

1. 1IA134A, 1B21-F028A IA INSTR TAP ISOL Closed
   Pipe cap removed
   1IA134A open

2. 1IA134B, 1B21-F028B IA INSTR TAP ISOL Closed
   Pipe cap removed
   1IA134B open

3. 1IA134C, 1B21-F028C IA INSTR TAP ISOL
   Pipe cap removed
   1IA134C open

4. 1IA134D, 1B21-F028D IA INSTR TAP ISOL
   Pipe cap removed
   1IA134D open

8.14.6 (Initial) Notify the RO/CRS that a test gauge (and flowmeter) will be installed at the following location.

1. 1B21-F084A, OUTBD MSIV A INST AIR DRAIN

2. 1B21-F084B, OUTBD MSIV B INST AIR DRAIN

3. 1B21-F084C, OUTBD MSIV C INST AIR DRAIN

4. 1B21-F084D, OUTBD MSIV D INST AIR DRAIN

8.14.7 (Initial) Verify below listed IA DRAIN VALVES are closed, remove Pipe Cap, CONCURRENTLY VERIFY and install test gauge.

1. 1B21-F084A, closed
   Pipe cap removed
   Test gauge installed
   Test gauge isolation valve opened

2. 1B21-F084B, closed
   Pipe cap removed
   Test gauge installed
   Test gauge isolation valve opened

3. 1B21-F084C, closed
   Pipe cap removed
   Test gauge installed
   Test gauge isolation valve opened

4. 1B21-F084D, closed
   Pipe cap removed
   Test gauge installed
   Test gauge isolation valve opened

8.14.8 (Initial) Slowly open the below listed valves.

1. 1B21-F084A, OUTBD MSIV A INST AIR DRAIN

2. 1B21-F084B, OUTBD MSIV B INST AIR DRAIN

3. 1B21-F084C, OUTBD MSIV C INST AIR DRAIN

4. 1B21-F084D, OUTBD MSIV D INST AIR DRAIN

8.14.9 (Initial) Verify that there are no air leaks at the test pressure gauge installed at:

1. 1B21-F084A, OUTBD MSIV A INST AIR DRAIN

2. 1B21-F084B, OUTBD MSIV B INST AIR DRAIN

3. 1B21-F084C, OUTBD MSIV C INST AIR DRAIN

4. 1B21-F084D, OUTBD MSIV D INST AIR DRAIN

8.14.10 (Record) Record the gauge EIN and pressure from the test gauge for the supply pipe being tested.

8.14.11 (Initial) Test period start:

1. Start the stopwatch for OUTBOARD MSIV IA Supply check valves.

2. Close test gauge isolation valve at:

   - 1B21-F084A
   - 1B21-F084B
   - 1B21-F084C
   - 1B21-F084D

8.14.12 (Record) (Initial) After the time required on CPS 9061.11D001:

1. Open test gauge isolation valve at:

   - 1B21-F084A
   - 1B21-F084B
   - 1B21-F084C
   - 1B21-F084D

2. Record final pressure from test gauge.

3. Record elapsed time.

8.14.13 (Record) Calculate the pressure drop and record the solution using the formula below:

Pressure (8.14.10) - Pressure (8.14.12)

8.14.14 (Initial) Close the IA INST TAP ISOL VALVE and install the Pipe Cap.

1. 1IA134A, 1B21-F028A IA INSTR TAP ISOL closed
   Pipe cap installed.

2. 1IA134B, 1B21-F028A IB INSTR TAP ISOL closed
   Pipe cap installed.

3. 1IA134C, 1B21-F028A IC INSTR TAP ISOL closed
   Pipe cap installed.

4. 1IA134D, 1B21-F028D IA INSTR TAP ISOL closed
   Pipe cap installed.

8.14.15 (Initial) Close and Cap 1IA127A, INST AIR TEST CONN.

8.14.16 (Initial) Open and Lock 1IA327, IA to AB STEAM TUNNEL HDR.

8.14.17 (Initial) Notify Radwaste that 1WX01PA,B operations may be returned to normal.

8.14.18 (Initial) Notify Operations that 1G33-F041, DRN FLOW TO CDSR BYPASS may be returned to service.

❶ 8.14.19 (Initial) Close valve, remove test gage, and replace pipe cap at the following:

1. 1B21-F084A Closed
   Gage removed
   Pipe cap replaced

2. 1B21-F084B Closed
   Gage removed
   Pipe cap replaced

3. 1B21-F084C Closed
   Gage removed
   Pipe cap replaced

4. 1B21-F084D Closed
   Gage removed
   Pipe cap replaced

❶

8.14.20 (Initial) Open the INST AIR SUPPLY VALVE:

1. 1IA083H, IA TO MSIV 28A
2. 1IA083B, IA TO MSIV 28B
3. 1IA083G, IA TO MSIV 28C
4. 1IA083A, IA TO MSIV 28D

❶ 8.15 Deleted

❷

NOTE

Section 8.16 is documented using C021.

Testing performed in 9861.05D013&D014 is not a duplicate or replacement for this test.

NOTE

This section tests the air supply check valves individually or both at the same time. If conducting test on 1B21F433A only, perform steps in column A of check list C021. If conducting test on 1B21F433B only, perform steps in column B. N/A the column not being tested as applicable.

❶❷ 8.16 **FW Testable Check Valves IA Check Valves & Piping Test**

8.16.1 IA Pipe Press Tests & Chk Vlv Close Test

1. (Initial) Notify RO/CRS which FW check valve is to be tested.

   1) 1B21-F032A, 'A' FW CHECK VALVE

   2) 1B21-F032B, 'B' FW CHECK VALVE

2. (Initial) Notify the RO/CRS that a test gauge is to be installed on:

   1) 1B21F492A, AIR ACCUMULATOR A DRAIN VALVE

   2) 1B21F492B, AIR ACCUMULATOR B DRAIN VALVE

3. (Initial) Verify the valve is shut, remove the pipe cap, CONCURRENTLY VERIFY and connect the test gauge.

   1) 1B21F492A, closed
      Pipe cap removed
      Test pressure gauge installed
      Test pressure gauge isolation valve opened.

   2) 1B21F492B, closed.
      Pipe cap removed
      Test pressure gauge installed
      Test pressure gauge isolation valve opened

4. (Initial) Slowly open the following valve:

   1) 1B21F492A, AIR ACCUMULATOR A DRAIN VALVE

   2) 1B21F492B, AIR ACCUMULATOR B DRAIN VALVE

8.16.1 (Cont'd)

5. (Initial) Close the FW TESTABLE CHK VLV IA SUPPLY VALVE.

   1) 1IA881A, INST AIR ISOL TO 1B21-F032A

   2) 1IA1039, INST AIR ISOL TO 1B21-F032B

6. (Initial) Remove the Pipe Cap and Open the INST AIR DRAIN VALVE.

   1) 1IA127A, FW A INST AIR TEST CONN

   2) 1IA127B, FW B INST AIR TEST CONN

7. (Record) Record the gauge EIN and pressure from the test gauge.

8. (Initial) Test period start:

   1) Start the stopwatch.

   2) Close test gauge isolation valve at:

      - 1B21-F492A
      - 1B21-F492B

9. (Record)(Initial) After the time required on CPS 9061.11D001 has elapsed:

   1) Open test gauge isolation valve at:

      - 1B21F492A
      - 1B21F492B

   2) Record final pressure from test gauge.

   3) Record elapsed time.

10. (Record) Calculate the pressure drop and record the solution using the formula below:

    Pressure (8.16.1.7) - Pressure (8.16.1.9)

8.16.2 (Initial) Close the drain valve and disconnect the test gauge and install pipe cap at:

1. 1B21F492A closed
   Test gauge removed
   Pipe cap installed

2. 1B21F492B
   Test gauge removed
   Pipe cap installed

8.16.3 (Initial) Notify the RO/CRS that the test gauge is removed from:

1. 1B21F492A

2. 1B21F492B

8.16.4 (Initial) Close the INST AIR DRAIN VALVE and reinstall the Pipe Cap:

1. 1IA127A, FW A INST AIR TEST CONN
   Pipe cap installed

2. 1IA127B, FW B INST AIR TEST CONN
   Pipe cap installed

8.16.5 (Initial) Open the FW TESTABLE CHK VLV IA SUPPLY VALVE.

1. 1IA881A, INST AIR ISOL TO 1B21-F032A

2. 1IA1039, INST AIR ISOL TO 1B21-F032B

8.17 **NOTIFICATION**

(Initial) Notify the SM/CRS of test completion.

9.0 ACCEPTANCE CRITERIA

9.1 OPERABILITY Requirements - Failure to meet the Acceptance Criteria shall constitute a failure to comply with the applicable LCO. Improved Tech Specs should be immediately reviewed to identify Action Statements needed for implementation.

9.1.1 ITS/ORM

0

1. SRVs actuator strokes using the "A" and "B" solenoids. *«ITS SRs 3.4.4.2, 3.4.4.3, 3.5.1.7, 3.6.1.6.1, 3.3.5.1.5 T4.a - T4.h, 3.3.5.1.5. T5.a - T5.g, 3.5.1.6, 3.6.1.6.2»*

2. The thermal overload protection devices are verified bypassed (IA Sys Div 1 (2) In test switches in Normal). *«ORM TR 4.5.2.2»*

9.1.2 ISI Requirements

1. The check valves shall be verified closed by monitoring the pressure drop in a reverse direction.

   If unacceptable, the valve shall be declared inoperable immediately.

2. The valve shall be verified open by monitoring flow from an upstream source through the check valve.

   If unacceptable, the valve shall be declared inoperable immediately.

3. The Piping Pressure Tests shall be determined to be within the limits.

   If unacceptable, Notify Plant Engineering.

0

9.2 **OTHER Requirements** - None

10.0 FINAL CONDITIONS

Instrument air is restored to the SRVs, MSIVs and the Feedwater Testable Check Valves.

0

11.0 **REFERENCES**

11.1 **Licensing Basis Documents**

11.1.1 LBD-1: ITS SR's 3.4.4.2,
3.4.4.3,
3.5.1.7,
3.6.1.6.1
«C001/C003: 8.1.1, 8.1.2, 8.3.9, 8.3.12»
«C005: 8.1.1, 8.1.2, 8.2.8, 8.2.11»

11.1.2 LBD-2: ITS SR's 3.3.5.1.5 T4.a - T4.h,
3.3.5.1.5 T5.a - T5.g,
3.3.6.5.4,
3.5.1.6,
3.6.1.6.2
«C001/C003: 8.1.1, 8.1.2, 8.3.9, 8.3.12»
«C005: 8.1.1, 8.1.2, 8.2.8, 8.2.11»

11.1.3 LBD-3: ITS SR 3.3.3.2.2
«C001: 8.2.1, 8.2.2»

11.1.4 LBD-4: ORM OT 2.5.2
«C001/C003: 8.5.1.4
C002/C004: 8.1.12.3, 8.1.13.3, 8.2.21.3»

11.1.5 USAR 7.3.2.1.2.3.1.17

11.1.6 NRC Generic Letter No. 89-04

11.1.7 SSER 5 para 6.3.2.2

11.2 **CPS Procedures**

11.2.1 OP-CL-101-301-1001,
General Equipment Operating Requirements

11.2.2 CPS 1512.01F007, Post Calibration Check Sheet

11.2.3 CPS 1887.00, Administration Of ISI Program Activities

11.2.4 CPS 3214.01, Plant Air (IA & SA)

11.3 **Design/Vendor/Print/Other** - None

11.4 **Commitments** - None

12.0 **APPENDICES** - None

0 13.0 **DOCUMENTS**

CPS 9061.11C001, Div 1 SRV/IA Tests
CPS 9061.11C002, Div 1 IA Piping/Check Valve Tests
CPS 9061.11C003, Div 2 SRV/IA Tests
CPS 9061.11C004, Div 2 IA Piping/Check Valve Tests
CPS 9061.11C005, Non-Div SRV/IA Tests

CPS 9061.11C006 thru C012: Not Used

CPS 9061.11C013, Pressure Test Of Inboard MSIV IA Piping
CPS 9061.11C014, Inboard MSIV IA Check Valve Close Test
1 2 CPS 9061.11C015, Not Used
1 CPS 9061.11C016, Inboard MSIV IA Check Valves & Piping Test
CPS 9061.11C017, Pressure Test Of Outboard MSIV IA Piping
CPS 9061.11C018, Outboard MSIV IA Check Valve Close Test
2 CPS 9061.11C019, Not Used
1 CPS 9061.11C020, Outboard MSIV IA Check Valves & Piping Test
2 CPS 9061.11C021, FW Testable Check Valves IA Check Valves and Piping Pressure Tests
1

CPS 9061.11D001, Instrument Air Check Valve Operability And Piping Pressure Tests

ATTACHMENT 3

CPS 9061.11C001
"Div. 1 SRV/IA Tests"

DIV 1 SRV/IA TESTS [For Div 1 SRV 1B21-F0_____]

SCOPE OF REVISION:

- Total rewrite - rev. marks not used (Specific Rev. 6a dispositioned in rewrite):

  Consolidation of C001, C002, C003, C004 procedure sections relating to Div 1 SRV Actuations into a stand alone checklist, including all data collection.
  - ITS amendment (U-603495) eliminates requirement to open each SRV in ITS SR 3.4.4.3, 3.5.1.7, 3.6.1.6.1. Verification of actuator stroking is the new ITS METHOD 2 criteria. Slow closure rig in no longer required.
  - Updated applicable items to reflect the ITS change and the ISI relief request #2204 for eliminating SRV stroke time/position verifications.
  - All previous LSF overlaps are still satisfied.

  This reformation/restructuring supports the rewrite of the Div 1 IA Piping Test sections into a stand alone C002.

❶ Specific rev 7a [Sheffield]: - [Editorial]: - PCR 165936-33: Corrected typo in step 5.1.6 to correct EIN for check valve 1B21-F039H, 1B21A003H Inst Air Supply CK Valve To Accumu (CVP).

CONTINUOUS USE

ORIGINATOR: *Thomas J. Landin* **CLASS CODE:** *SNNI1*

SQR: *Dale Shelton* **APPROVAL DATE:** *APR 01 2002*

CURRENT CHANGES TO GENERAL REVISION

	Change #	Date	List of Affected Pages
❶	7a	11/24/04	1, 3
❷			
❸			
❹			
❺			

Div 1 SRV being tested: _____

5.0 PREREQUISITES

5.1 Pre-Planning Information

1. This is a stand alone performance checklist, therefore the base procedure is not required to perform the procedure actions.

   This checklist is written for performance of one SRV. Use a separate checklist for each SRV being tested.

   Portions of the checklist which are not being used shall be N/A'd prior to starting work.

   All ISI data is recorded and retained in the procedure.

2. Multiple SRV's can be tested concurrently.

   The procedure is structured to flow from 8.1 through 8.4 with minimal condition changes, however the sections can be performed in any order.

   The number of available gauges and personnel will be the only limitation to the number of SRV's which can be tested at in any one sequence.

3. Sections 8.1, 8.2 and 8.3 require the SRV Actuator to be disconnected.

   Prerequisite 5.11 and Restoration 8.5.2 steps provide the documented Mech Maint configuration control for the SRV Actuator.

   Appropriate Clearances and Work Requests will need to be generated as part of the planning package.

Div 1 SRV being tested: _____

5.0 **PREREQUISITES** (cont'd)

5.1 **Pre-Planning Information** (cont'd)

4. Section 8.1 tests SRV Actuators Using both the "A" and "B" Solenoids in the MCR.
   - Tests Div 1 SRVs - 1B21-F041C, F047A, F047C, F051C, F051G
   - Required each refueling cycle
   - Satisfies ITS SR's 3.4.4.2, 3.4.4.3, 3.5.1.7, 3.6.1.6.1 requirements

   Partially satisfies LSF overlaps in ITS SR's 3.3.5.1.5 T4.a - T4.h, 3.3.5.1.5 T5.a - T5.g, 3.3.6.5.4, 3.5.1.6, 3.6.1.6.2

   Verifying each SRV valve actuator strokes when manually actuated (Method 2) using the "A" and "B" solenoids.

5. Section 8.2 tests SRV Actuators Using both the Div 1 and Div 2 Solenoids from the RSP.
   - Tests Div 1 RSP SRVs - 1B21-F051C, F051G
   - Required each refueling cycle
   - Satisfies ITS SR 3.3.3.2.2: Verifying each RSP SRV control circuit and transfer switch is capable of performing it's intended function.
     - ☞ Partially satisfies CPS 9027.01C006 - Section 8.6.1 SRV Actuations only.

6. Section 8.3 tests the Div 1 Check Valves.
   - Tests Div 1 SRVs Check Valves - 1IA042B; and 1B21-F036P, F039H, F039C, F039K, F039S
   - Required each refueling cycle
   - Satisfies ISI Pressure Drop Test (SRV Open/Closed)
   - Satisfies SSER 5: Leak testing ADS air supply check valves and pneumatic actuators
   - Temp pressure gauge required

7. Section 8.4 tests the Div 1 SRV Accum Supply Check Valves.
   - Tests Div 1 SRVs Check Valves
   - Required each refueling cycle
   - Satisfies ISI Full Flow to OPEN Test
   - Satisfies NRC GL 89-04: Full Flow Exercise of designated check valves in the IA supply lines
   - Temp flow meter required

Div 1 SRV being tested: _____

5.0 **PREREQUISITES** (cont'd)

5.2 Document on Title Page and in all double underlined blanks the Div 1 SRV EIN being tested.

N/A any sections/steps not being used for this SRV.

SRV: _____ _____

5.3 (Initial) In conjunction with the SMngt, review the following impact statements to determine required plant status to perform this test:

OPERABILITY IMPACTED:

ITS LCO 3.3.3.2, 3.4.4, 3.5.1, 3.6.1.6

ORM OR 2.5.2: MOV Thermal Overload Protection

SYSTEMS IMPACTED:

AFFECTED ANNUNCIATORS AND COMPUTER POINTS:

5041-7B, Not Available IA/SA Systems Division 1
5067-7L, Loss of Inst Air ADS Relief Vlvs
5063-6A, Remote Shtdn Transfer Sw In Emerg Pos

RPS TRIP: N/A

CRVICS ISOLATION: N/A

REQUIRED OPERABLE CHANNELS: N/A

COINCIDENT CHANNELS THAT PREVENT ACTUATION: N/A

PLANT/SYSTEM CONDITIONS REQUIRED TO CONDUCT THIS TEST:

- MODE 4 or 5
- SRVs will not be available for alternate SDC.
- ADS not required operable MODEs 4 or 5

Impact Matrix discussed. _____ / _____
SMngt Performer

Initial

Div 1 SRV being tested: _____

5.0 **PREREQUISITES** (cont'd)

5.4 Verify Plant Air System is in Operation as per CPS 3214.01, Plant Air (IA & SA), or CPS 3214.03, Temporary Service Air. _____

5.5 Verify Reactor vessel is in MODE 4 or 5. _____

5.6 Verify the drywell has been evaluated to be accessible. _____

5.7 Generate a CPS 1512.01F007, Post Calibration Check Sheet, for each instrument listed in 7.0. _____

5.8 Check the calibration due date of test equipment to be used, to ensure calibration is up-to-date. _____

5.9 Verify communications established as necessary. _____

5.10 Obtain permission from SMngt to perform this procedure.

_____ / _____ _____

Date Time SMngt

Div 1 SRV being tested: _____

5.0 **PREREQUISITES** (cont'd)

5.11 Mech Maint uncouple the SRV actuator as follows. (N/A if only section 8.4 being performed)

Uncoupling SRV _____ Actuator (Refer to Appendix A)

1. Verify working on **SRV** _____. _____

2. Straighten tab washer (BA) on stem. _____

3. Remove nut (AH) from stem. _____

4. Remove tab washer (BA) from stem. _____

5. (Record) Measure from top of stem (V) to top of bushing (AJ). **CV** ___/___

   Measurement to be 3 decimal places.

   Measurement: _____

6. Ensure the threads are clean and undamaged, THEN carefully (by hand only), unscrew roller bearing assembly (AJ) until there is at least a 1.75 inch gap between the roller bearings (AP) and the hardened blocks (BC). _____

7. Notify MCR that **SRV** _____ actuator has been uncoupled. _____

Div 1 SRV being tested: _____

7.0 **MATERIALS/TEST EQUIPMENT**

7.1 (Record below) Stopwatch
[Range: 0 - 40 min, Accuracy: ± 0.10 sec/40 min, Minor Divisions: N/A; or equivalent stopwatch.]

7.2 (Record below) Pressure gauge

0 - 200 psig test gauge
(± 0.25% accuracy with 1 psig increments)
or equivalent and valves (see below).

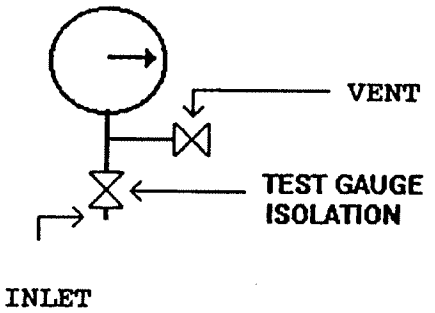

7.3 (Record below) A flow meter capable of measuring 10 - 30 SCFM, ±2% accuracy or equivalent.

Description	M&TE No.	Cal. Due Date	

Div 1 SRV being tested: _____

8.0 **PROCEDURE**

8.1 **SRV Actuator Test**

8.1.1 Using MCR SRV "A" Solenoid *«LBD-1, LBD-2»*

☞ This sub-section may be N/A'd if Section 8.3 will be performed, as it utilizes the MCR SRV "A" Solenoid, and therefore fully satisfies the surveillance requirements.

1. Verify operator stationed at **SRV** _____ and in communication with the MCR. _____

2. At 1H13-P601, place **SRV** _____ control switch to OPEN. _____

3. (Drywell) Verify SRV actuator stroked open. _____

4. At 1H13-P601, place **SRV** _____ control switch to AUTO. **IV** ___/___

5. (Drywell) Verify SRV actuator stroked shut. _____

8.1.2 Using MCR SRV "B" Solenoid *«LBD-1, LBD-2»*

1. Verify operator stationed at **SRV** _____ and in communication with the MCR. _____

2. At 1H13-P642, place **SRV** _____ control switch to OPEN. _____

3. (Drywell) Verify SRV actuator stroked open. _____

4. At 1H13-P642, place **SRV** _____ control switch to AUTO. **IV** ___/___

5. (Drywell) Verify SRV actuator stroked shut. _____

Div 1 SRV being tested: _____

8.2 **Remote Shutdown Panel (RSP) SRV Actuator Test**

☞ Only applicable to Div 1 SRVs 1B21-F051C/F051G

8.2.1 Using RSP SRV Div 1 Solenoid *«LBD-3»*

1. Verify the following RSP Div 1 SRV solenoid control switches are in CLOSE.
   1) B21C-F051C control switch C61A-S48 _____
   2) B21C-F051D control switch C61A-S49 _____
   3) B21C-F051G control switch C61A-S58 _____
2. Place RSP Transfer Switch C61-S10 in EMERG. _____
3. (MCR) Verify annunciator REMOTE SHTDN TRANSFER SW IN EMERG POS (5063-6A) alarms, or is already due to another transfer switch being in EMERG. _____
4. Verify operator stationed at **SRV** _____ and in communication with the MCR. _____
5. Place RSP Div 1 **SRV** _____ control switch to OPEN. _____

   [C61A-S48(F051C), C61A-S58(F051G)]
6. (Drywell) Verify SRV actuator stroked open. _____
7. Place RSP Div 1 **SRV** _____ control switch to CLOSE. **IV** ___/___

   [C61A-S48(F051C), C61A-S58(F051G)]
8. (Drywell) Verify SRV actuator stroked shut. _____
9. Return RSP Transfer Switch C61-S10 to NORMAL. **IV** ___/___
10. (MCR) Verify annunciator REMOTE SHTDN TRANSFER SW IN EMERG POS (5063-6A) clears, or remains in due to another transfer switch being in EMERG. _____

Div 1 SRV being tested: _____

8.2 **Remote Shutdown Panel (RSP) SRV Actuator Test** (cont'd)

☞ Only applicable to Div 1 SRVs 1B21-F051C/F051G

8.2.2 Using RSP SRV Div 2 Solenoid *«LBD-3»*

1. Verify the following RSP Div 2 SRV solenoid control switches are in CLOSE.
   1) B21C-F051C control switch C61-HS524 _____
   2) B21C-F051D control switch C61-HS525 _____
   3) B21C-F051G control switch C61-HS526 _____
2. Place RSP Transfer Switch C61-HS527 in EMERG. _____
3. (MCR) Verify annunciator REMOTE SHTDN TRANSFER SW IN EMERG POS (5063-6A) alarms, or is already due to another transfer switch being in EMERG. _____
4. Verify operator stationed at **SRV** _____ and in communication with the MCR. _____
5. Place RSP Div 2 **SRV** _____ control switch to OPEN. _____

   [C61-HS524(F051C), C61-HS526(F051G)]
6. (Drywell) Verify SRV actuator stroked open. _____
7. Place RSP Div 2 **SRV** _____ control switch to CLOSE. **IV** ___/___

   [C61-HS524(F051C), C61-HS526(F051G)]
8. (Drywell) Verify SRV actuator stroked shut. _____
9. Return RSP Transfer Switch C61-HS527 to NORMAL. **IV** ___/___
10. (MCR) Verify annunciator REMOTE SHTDN TRANSFER SW IN EMERG POS (5063-6A) clears, or remains in due to another transfer switch being in EMERG. _____

Div 1 SRV being tested: _____

8.3 **SRV IA Check Valves/Air Actuator Test**

1. Notify the RO/CRS that a test gauge and valves are to be installed on the SRV's 1B21-F082(81) instrument air drain valve. _____

2. For applicable SRV being tested (N/A others):

   Verify valve is shut, remove pipe cap and install test gauge with isolation valve.

   1) Div 1: SRV 51G (CNMT 762', AZM 30)
      1B21-F082S, SRV 51G Inst Air Drain. **CV** ___/___

   2) Div 1: SRV 47C (CNMT 762', AZM 71)
      1B21-F082K, SRV 47C Inst Air Drain. **CV** ___/___

   3) Div 1: SRV 41C (CNMT 761', AZM 86)
      1B21-F082C, SRV 41C Inst Air Drain. **CV** ___/___

   4) Div 1: SRV 47A (CNMT 760', AZM 38)
      1B21-F082H, SRV 47A Inst Air Drain. **CV** ___/___

   5) Div 1: SRV 51C (CNMT 769', AZM 80)
      1B21-F081P, SRV 51C Inst Air Drain. **CV** ___/___

NOTE

With 1IA012A handswitches in AUTO, 1IA012A will auto open when 1IA012B is fully closed.

3. Div 1 ADS Instrument Air Supply Setup

   ☞ OK to Initial as C/M if coming from Section 8.4.

   ☞ This step common to other Div 1 valves being tested as a package. OK to initial for C/M.

   1) Place IA SYS DIV 1 IN TEST switch to TEST. _____
      a) Verify 5041-7B, NOT AVAILABLE IA/SA SYSTEMS DIVISION 1 in alarm. _____
      b) Verify IA DIV 1 MOV's IN TEST light energizes. _____

   2) Verify 5067-7L, LOSS OF INST AIR ADS RELIEF VLVS is clear. _____

   3) Shut/verify shut 1IA012A, ADS IA CNMT Outbd Isol Valve. _____

   4) Shut 1IA012B, ADS IA CNMT Inbd Isol Valve. _____

Initial

Div 1 SRV being tested: _____

8.3 **SRV IA Check Valves/Air Actuator Test** (cont'd)

4. Verify shut the test gauge isolation valve. _____

5. Slowly open the applicable SRV's 1B21-F082(81) inst air drain valve. _____

6. Open the test gauge isolation valve. _____

7. Verify that there are no noticeable air leaks downstream of the check valve. _____

NOTE

High/Low Pressure ADS IA Supply Div 1 Or 2 annunciator will energize when header pressure lowers to 140 psig (5040-6F).

8. Depressurize the Div 1 IA header:

   ☞ This step common to other Div 1 valves being tested as a package. OK to initial for C/M.

   1) Verify shut 1IA097B, Div 1 ADS Drn Vlv. _____

   2) Remove pipe cap downstream of 1IA097B. _____

   3) Slowly open 1IA097B. _____

9. Actuating the SRV (using 'A' Solenoid) *«LBD-1, LBD-2»*

   1) Verify operator stationed at **SRV** _____ and in communication with the MCR. _____

   2) At 1H13-P601, place **SRV** _____ control switch to OPEN. _____

   3) (Drywell) Verify SRV actuator stroked open. _____

Div 1 SRV being tested: _____

8.3 **SRV IA Check Valves/Air Actuator Test** (cont'd)

10. Pressure Drop Test (SRV OPEN)

1) Allow pressure to stabilize on the test pressure gauge, then record the Test Gauge Pressure. _____

_____ psig

2) Start the stop watch. _____

3) Shut the test gauge isolation valve. _____

4) After 108 minutes (31 minutes for 1B21-F051C),

a) Open the test gauge isolation valve. _____

b) Record the total elapsed time. _____

_____ minutes (≥ 108[31] min)

5) Record the final Test Gauge Pressure. _____

_____ psig

6) Determine the pressure drop. _____

8.3.10.1: _____ psig minus,
8.3.10.5: _____ psig equals:

_____ Pressure Drop

7) Verify Pressure Drop is ≤ 1.5 psig. _____

11. At 1H13-P601, place **SRV** _____ control switch to AUTO. **IV** ___/___

12. (Drywell) Verify SRV actuator stroked shut. _____
«LBD-1, LBD-2»

Div 1 SRV being tested: _____

8.3 **SRV IA Check Valves/Air Actuator Test** (cont'd)

13. Pressure Drop Test (SRV CLOSED)

1) Allow pressure to stabilize on the test pressure gauge, then record the Test Gauge Pressure. _____

_____ psig

2) Start the stop watch. _____

3) Shut the test gauge isolation valve. _____

4) After 108 minutes (31 minutes for 1B21-F051C),

a) Open the test gauge isolation valve. _____

b) Record the total elapsed time. _____

_____ minutes (≥ 108[31] min)

5) Record the final Test Gauge Pressure. _____

_____ psig

6) Determine the pressure drop. _____

8.3.13.1: _____ psig minus,
8.3.13.5: _____ psig equals:

_____ Pressure Drop

7) Verify Pressure Drop is ≤ 1.5 psig. _____

14. Shut and cap 1IA097B, Div 1 ADS Drn Vlv. **IV** ___/___

☞ This step common to other Div 1 valves being tested as a package. OK to initial for C/M.

Div 1 SRV being tested: _____

8.3 **SRV IA Check Valves/Air Actuator Test** (cont'd)

15. Pressure Test Gauge Removal

For applicable SRV (N/A others):

Shut/verify shut the 1B21-F082(81) Inst Air Drain,
shut the test gauge isolation valve,
vent off the test gauge,
remove the test gauge, and
IF Section 8.4 is not being performed next,
THEN Re-install the pipe cap.

1) Div 1: SRV 51G (CNMT 762', AZM 30)
1B21-F082S, SRV 51G Inst Air Drain. **IV**___/___

2) Div 1: SRV 47C (CNMT 762', AZM 71)
1B21-F082K, SRV 47C Inst Air Drain. **IV**___/___

3) Div 1: SRV 41C (CNMT 761', AZM 86)
1B21-F082C, SRV 41C Inst Air Drain. **IV**___/___

4) Div 1: SRV 47A (CNMT 760', AZM 38)
1B21-F082H, SRV 47A Inst Air Drain. **IV**___/___

5) Div 1: SRV 51C (CNMT 769', AZM 80)
1B21-F081P, SRV 51C Inst Air Drain. **IV**___/___

16. If section 8.1, 8.2, and 8.3 are complete,
then restore SRV actuator connection
per 8.5.2 while continuing in the procedure.

Div 1 SRV being tested: _____

8.4 SRV IA Accum Supply Chk Vlvs Full Flow to OPEN Test

NOTE

With 1IA012A handswitches in AUTO, 1IA012A will auto open when 1IA012B is fully closed.

1. Div 1 ADS Instrument Air Supply Setup

   ☞ OK to Initial as C/M if coming from Section 8.3.

   ☞ This step common to other Div 1 valves being tested as a package. OK to initial for C/M.

   1) Place IA SYS DIV 1 IN TEST switch to TEST. _____

      a) Verify 5041-7B, NOT AVAILABLE IA/SA SYSTEMS DIVISION 1 in alarm. _____

      b) Verify IA DIV 1 MOV's IN TEST light energizes. _____

   2) Verify 5067-7L, LOSS OF INST AIR ADS RELIEF VLVS is clear. _____

   3) Shut/verify shut 1IA012A, ADS IA CNMT Outbd Isol Valve. _____

   4) Shut 1IA012B, ADS IA CNMT Inbd Isol Valve. _____

2. At AB MCC 1A2-13C (1AP73E), turn off both breakers for 1IA012B, ADS Supply Header Inboard Isol Valve. _____

   ☞ This step common to other Div 1 valves being tested as a package. OK to initial for C/M.

Div 1 SRV being tested: _____

8.4 **SRV IA Accum Supply Chk Vlvs Full Flow to OPEN Test** (cont'd)

NOTE

Each SRV IA check valve shall be tested individually, one at a time.

5067-7L, LOSS OF INSTR AIR ADS RELIEF VLVS will be received.

3. For applicable SRV IA being tested (N/A others):

   Verify valve is shut, remove/verify removed pipe cap, and then slowly open the valve to depressurize the SRV accumulator.

   1) Div 1: SRV 51G (CNMT 762', AZM 30)
      1B21-F082S, SRV 51G Inst Air Drain. _____

   2) Div 1: SRV 47C (CNMT 762', AZM 71)
      1B21-F082K, SRV 47C Inst Air Drain. _____

   3) Div 1: SRV 41C (CNMT 761', AZM 86)
      1B21-F082C, SRV 41C Inst Air Drain. _____

   4) Div 1: SRV 47A (CNMT 760', AZM 38)
      1B21-F082H, SRV 47A Inst Air Drain. _____

   5) Div 1: SRV 51C (CNMT 769', AZM 80)
      1B21-F081P, SRV 51C Inst Air Drain. _____

4. Flowmeter Installation

   1) Shut the SRV's 1B21-F082(81) Inst Air Drain valve. _____

   2) Install the air flowmeter at the SRV's 1B21-F082(81) Inst Air Drain valve. **CV** ___/___

Div 1 SRV being tested: _____

8.4 **SRV IA Accum Supply Chk Vlvs Full Flow to OPEN Test** (cont'd)

NOTE

The following two steps are to be performed simultaneously.

5. Slowly manually throttle open 1IA012B, ADS IA CNMT Inbd Isol Valve. _____

6. (Record) Slowly throttle open the SRV's 1B21-F082(81) Inst Drain Air valve until ≥ 10 SCFM (≥ 30 SCFM for SRV 51D/F036P) is obtained. _____

   _____ SCFM obtained

7. Manually shut 1IA012B, ADS IA CNMT Inbd Isol Valve. _____

8. Shut the SRV's 1B21-F082(81) Inst Air Drain valve. _____

NOTE

At the completion of all Div 1 SRV check valve flow tests, perform the following steps prior to system restoration.

9. Manually slowly open 1IA012B, ADS IA CNMT Inbd Isol Valve ~ 25% until system is re-pressurized to normal operating pressure. _____

   ☞ This step common to other Div 1 valves being tested as a package. OK to initial for C/M.

Div 1 SRV being tested: _____

8.4 **SRV IA Accum Supply Chk Vlvs Full Flow to OPEN Test** (cont'd)

10. Flow Test Gauge Removal

For applicable SRV (N/A others):

Shut/verify shut the 1B21-F082(81) Inst Air Drain,
shut the test gauge isolation valve,
vent off the test gauge,
remove the flow test gauge, and
IF Section 8.3 is not being performed next,
THEN Re-install the pipe cap.

1) Div 1: SRV 51G (CNMT 762', AZM 30)
1B21-F082S, SRV 51G Inst Air Drain. **IV** ___/___

2) Div 1: SRV 47C (CNMT 762', AZM 71)
1B21-F082K, SRV 47C Inst Air Drain. **IV** ___/___

3) Div 1: SRV 41C (CNMT 761', AZM 86)
1B21-F082C, SRV 41C Inst Air Drain. **IV** ___/___

4) Div 1: SRV 47A (CNMT 760', AZM 38)
1B21-F082H, SRV 47A Inst Air Drain. **IV** ___/___

5) Div 1: SRV 51C (CNMT 769', AZM 80)
1B21-F081P, SRV 51C Inst Air Drain. **IV** ___/___

11. Notify RO/CRS that test gauges and valves have been removed from SRV IA drains. _____

Div 1 SRV being tested: _____

8.5 **RESTORATION**

8.5.1 **1IA012B Restoration**

(N/A if section 8.3 or 8.4 not used)

☞ Section 8.5.1 is common to other Div 1 valves being tested as a package. OK to NOTE out referencing which SRV checklist was utilized for the restoration.

1. At AB MCC 1A2-13C (1AP73E), turn on both breakers for 1IA012B, **IV** ___/___
   ADS Supply Header Inboard Isol Valve. **IV** ___/___

2. Stroke 1IA012B, ADS IA CNMT Inbd Isol Valve as follows to restore operability:
   1) Open 1IA012B. _____
   2) Shut 1IA012B. _____
   3) Open 1IA012B. **IV** ___/___

3. Shut 1IA012A, ADS IA CNMT Outbd Isol Valve as follows:

   Place C/S for 1IA012A to CLOSE, then return it to AUTO. **IV** ___/___

4. Place/verify the IA SYS DIV 1 IN TEST switch to NORMAL. *«LBD-4»* **IV** ___/___
   1) Verify NOT AVAILABLE IA/SA SYSTEMS DIVISION 1 annunciator (5041-7B) clears depending on existing plant conditions. _____
   2) Verify IA DIV 1 MOVs IN TEST light deenergizes. _____

5. Verify the following alarms clear:
   1) LOSS OF INST AIR ADS RELIEF VLVS (5067-7L) _____
   2) HIGH/LOW PRESSURE ADS IA SUPPLY (5040-6F) _____

Div 1 SRV being tested: _____

8.5 **RESTORATION** (cont'd)

8.5.2 Mech Maint recouple the SRV actuator as follows. (N/A if only section 8.4 being performed)

Re-coupling SRV Actuator (Refer to Appendix A)

1. Carefully (by hand only), screw roller bearing assembly (AJ) down the stem until measurement from top of stem (V) to top of bushing (AJ) is the same as measurement taken in step 5.11.5. **CV** ___/___

   ☞ Roller bearing assembly may also be set using the zero clearance method IAW CPS 8216.03, Section 8.2.2.3 or 8.4.2.5 as applicable.

2. Install tab washer (BA) and locknut (AH). **IV** ___/___

3. Tighten locknut (AH) while ensuring roller bearing assembly (AJ) does not move. **CV** ___/___

4. Bend tab washer (BA) into place on locknut (AH). **IV** ___/___

5. Notify MCR that **SRV** _____ actuator has been recoupled. _____

8.6 **NOTIFICATION**

Notify SMngt of test completion on **SRV** _____.

_____/_____ _____
Date Time

APPENDIX A

SRV ZERO CLEARANCE

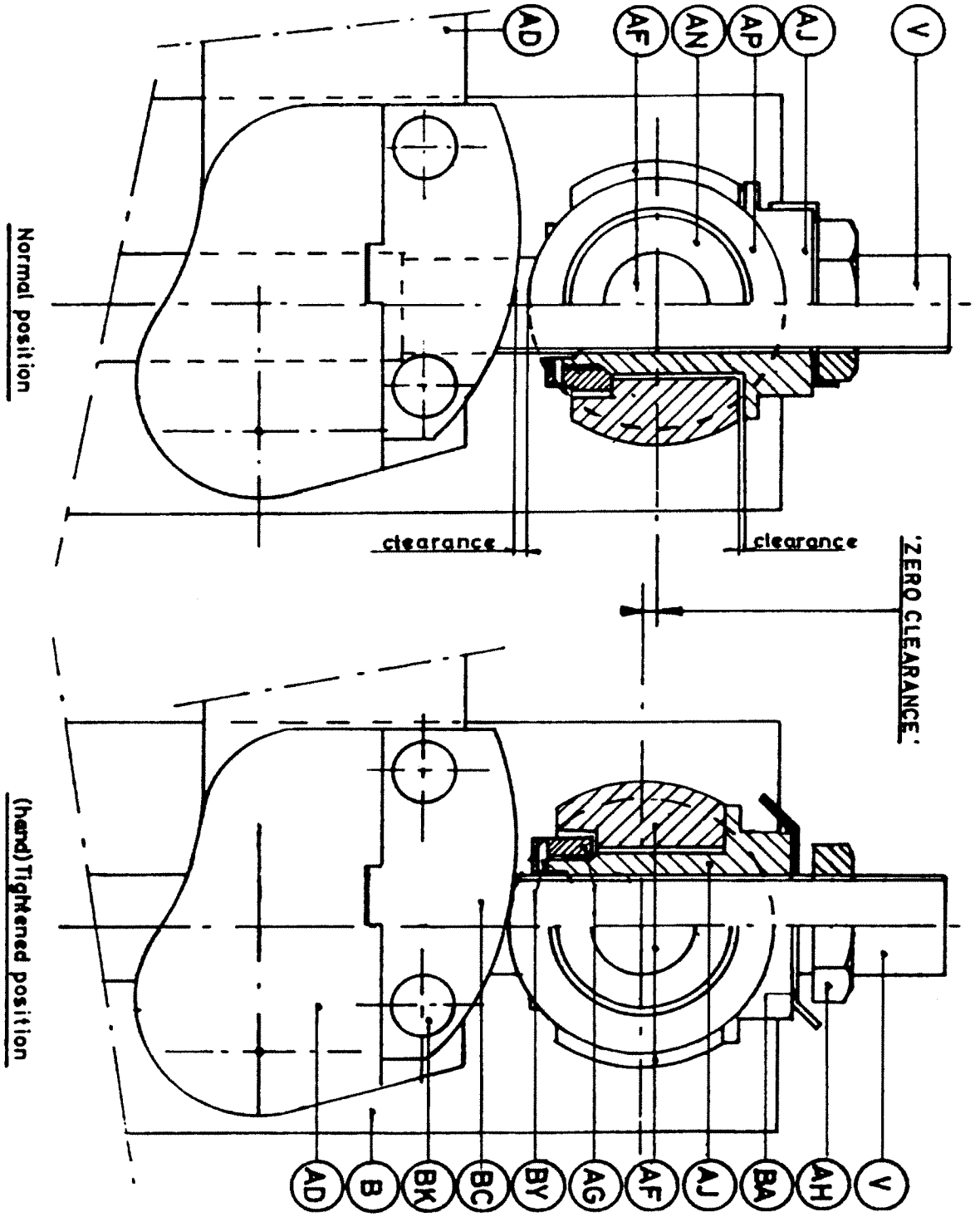

SUPPLEMENTAL REVIEW SHEET

Corrective Action Taken

Operability Requirements:

ITS LCOs: 3.3.3.2 3.3.5.1 3.3.6.5
3.4.4 3.5.1 3.6.1.6

ORM ORs: None

ODCM ORs: None

As applicable:

Initiated Issue Report No. _____

Comments/Deficiencies

_____

_____

_____

_____

_____

_____

_____

_____

_____

_____

_____

_____

_____

_____

Review and Approval

Cognizant Plant Engineer: _____
(ISI Pump and Valve) (Signature) (Date)

Shift Management: _____
(Signature) (Date)

ATTACHMENT 4

CPS 9061.11C002
"Div. 1 IA Piping/Check Valve Tests"

DIV 1 IA PIPING/CHECK VALVE TESTS

SCOPE OF REVISION:

- Major revision to support C1R08 activities - no rev marks used.

  Consolidation of C001, C002, C003, C004 procedure sections relating to Div 1 IA Piping Tests into a stand alone checklist, including all data collection.

  This reformation/restructuring supports the rewrite of the Div 1 SRV Actuation sections into a stand alone C001.

  Technical content has not changed in this revision, only the simplification and organization of procedure actions.

CONTINUOUS USE

ORIGINATOR: *Thomas J. Landin* **CLASS CODE:** *SNNI1*

ITR: *Dale Shelton* **APPROVAL DATE:** *APR 01 2002*

CURRENT CHANGES TO GENERAL REVISION

	Change #	Date	List of Affected Pages
❶			
❷			
❸			
❹			
❺			

5.0 PREREQUISITES

5.1 Pre-Planning Information

1. This is a stand alone performance checklist, therefore the base procedure is not required to perform the procedure actions.

   Section 8.1 and 8.2 can be performed in either order.

   All ISI data is recorded and retained in the procedure.

2. Section 8.1 tests Div 1 IA Piping.
   - Satisfies ISI Flow Requirements
   - Required each alternating refueling cycle
   - Temp pressure gauge required

3. Section 8.2 tests the 1IA042B, Div 1 IA Air Header Check Valve.
   - Satisfies ISI Exercise/Flow Requirements
   - Required each refueling cycle
   - Temp flow meter required
   - Temp pressure gauge required

4. During section 8.1, Div 2 ADS Valves 41B, 41D, 41F and LLS SRV 51D will be isolated from the normal air amplifier supply.

   If these valves are being used for Alternate Shutdown Cooling credit, their backup air supply is required.

5.0 **PREREQUISITES** (cont'd)

5.2 (Initial) In conjunction with the SMngt, review the following impact statements to determine required plant status to perform this test:

OPERABILITY IMPACTED:

ITS LCO's 3.4.4, 3.5.1, 3.6.1.6

ORM OR 2.5.2: MOV Thermal Overload Protection

☞ Operate MOV test prep switches IA SYS DIV 1 IN TEST and IA SYS DIV 2 IN TEST as needed to operate valves IAW OP-CL-101-301-1001 and ORM 2.5.2.

SYSTEMS IMPACTED:

AFFECTED ANNUNCIATORS AND COMPUTER POINTS:

5040-6F, HIGH/LOW PRESSURE ADS IA SUPPLY
5041-7B, NOT AVAILABLE IA/SA SYSTEMS DIVISION 1
5041-7G, NOT AVAILABLE IA/SA SYSTEMS DIVISION 2
5067-7L, LOSS OF INST AIR ADS RELIEF VLVS

RPS TRIP: N/A

CRVICS ISOLATION: N/A

REQUIRED OPERABLE CHANNELS: N/A

COINCIDENT CHANNELS THAT PREVENT ACTUATION: N/A

PLANT/SYSTEM CONDITIONS REQUIRED TO CONDUCT THIS TEST:

- MODE 4 or 5
- SRVs will not be available for alternate SDC.
- ADS not required operable MODEs 4 or 5

Impact Matrix discussed. _____ / _____
SMngt Performer

5.3 Verify Plant Air System is in Operation as per CPS 3214.01, Plant Air (IA & SA), or CPS 3214.03, Temporary Service Air. _____

1. Verify ADS DIV 1 IA BACKUP AIR BOTTLES are charged to ≥ 2300 psig. _____

5.4 Verify Reactor vessel is in MODE 4 or 5. _____

Initial

5.0 **PREREQUISITES** (cont'd)

5.5 Verify the drywell has been evaluated to be accessible. _____

5.6 Generate a CPS 1512.01F007, Post Calibration Check Sheet, for each instrument listed in 7.0. _____

5.7 Check the calibration due date of test equipment to be used, to ensure calibration is up-to-date. _____

5.8 Verify communications established as necessary. _____

5.9 Obtain permission from SMngt to perform this procedure.

_____ / _____ _____
Date Time SMngt

5.10 Install test pressure gauge (0 - 2500 psig) on DIV 1 ADS BACKUP AIR BOTTLE HEADER as follows:

☞ May be deferred until needed in step 8.1.6.

1) Notify RO/CRS that a test pressure gauge will be installed. _____

2) At the DIV 1 ADS BACKUP AIR BOTTLE storage area, shut 1IA-1144B, Isolation Valve To 1PI-IA082B. _____

3) Carefully vent and disconnect the isolated pressure gauge 1PI-IA082B. _____

4) Install the test pressure gauge (0 - 2500 psig). **CV** ___ / ___

5) Open 1IA-1144B, Isolation Valve To 1PI-IA082B. _____

7.0 MATERIALS/TEST EQUIPMENT

7.1 (Record below) Stopwatch
[Range: 0 - 40 min, Accuracy: ± 0.10 sec/40 min,
Minor Divisions: N/A; or equivalent stopwatch.]

7.2 (Record below) Pressure gauge
0 - 2500 psig 16″ Heise gauge
(± 2.5 psig accuracy with 1 psig resolution)
or equivalent and valves (see below).

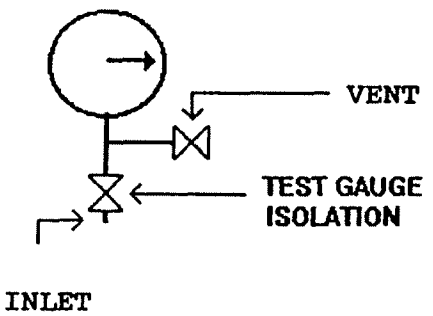

7.3 (Record below) A flow meter capable of measuring
10 - 30 SCFM, ±2% accuracy or equivalent.

Description	M&TE No.	Cal. Due Date	

8.0 PROCEDURE

8.1 Div 1 IA Piping Pressure Test

NOTE

With 1IA012A handswitches in AUTO, 1IA012A will auto open when 1IA012B is fully closed. Likewise, 1IA013A will Auto open when 1IA013B is fully closed.

1. Div 1 ADS Instrument Air Supply Setup

   ☞ OK to Initial as C/M if coming from Section 8.2.

   1) Place IA SYS DIV 1 IN TEST switch to TEST. _____

      a) Verify 5041-7B, NOT AVAILABLE IA/SA SYSTEMS DIVISION 1 annunciates. _____

      b) Verify IA DIV 1 MOV's IN TEST light energizes. _____

   2) Shut 1IA012B, ADS IA CNMT Inbd Isol Valve. _____

   3) Open/verify open 1IA012A, ADS IA CNMT Outbd Isol Valve. _____

2. Div 2 ADS Instrument Air Supply Setup

   1) Place IA SYS DIV 2 IN TEST switch to TEST. _____

      a) Verify 5041-7G, NOT AVAILABLE IA/SA SYSTEMS DIVISION 2 annunciates. _____

      b) Verify IA DIV 2 MOV's IN TEST light energizes. _____

   2) Shut 1IA013B, ADS IA CNMT Inbd Isol Valve. _____

   3) Open/verify open 1IA013A, ADS IA CNMT Outbd Isol Valve. _____

Initial

8.1 **Div 1 IA Piping Pressure Test** (cont'd)

3. Shut:

   1) 1IA029A, Inst Air Amp A Outlt Isol _____

   2) 1IA029B, Inst Air Amp B Outlt Isol _____

   3) 1IA029C, Inst Air Amp C Outlt Isol _____

   4) 1IA029D, Inst Air Amp D Outlt Isol _____

   5) 1IA029E, Inst Air Amp E Outlt Isol _____

   6) 1IA029F, Inst Air Amp F Outlt Isol _____

   7) 1IA075A,
      Div II ADS Air Bottle Recharge Isol _____

   8) 1IA075B,
      Div I ADS Air Bottle Recharge Isol _____

4. Normal air supply header depressurization:

   1) Verify shut 1IA098, Inst Air Capped Conn. _____

   2) Remove pipe cap at 1IA098. _____

   3) Slowly open 1IA098 to depressurize
      piping downstream of air amplifiers. _____

5. Depressurization of fill header to
   ADS BACKUP AIR BOTTLES:

   1) Verify 1IA133A, Low Point Drain is closed. _____

   2) Remove cap at 1IA133A, Low Point Drain. _____

   3) Slowly throttle open 1IA133A. _____

   4) Slowly open 1IA073, Remote Fill Isolation
      to depressurize the fill line. _____

8.1 **Div 1 IA Piping Pressure Test** (cont'd)

6. Allow ~ 20 minutes for header pressure to stabilize before proceeding. _____

   ☞ Verify test gauge installed/ready per 5.10.

7. (Record) Initial pressure reading:

   1) Record test gauge pressure from test gauge at DIV 1 ADS BACKUP AIR BOTTLE HEADER. _____

      Pressure: _____ psig

   2) Start the stopwatch. _____

   3) Shut test pressure gauge isolation valve. _____

8. After 60 minutes,

   1) Open the test gauge isolation valve. _____

   2) Record the total elapsed time. _____

      _____ time (minutes) (≥ 60 min)

   3) Record the final Test Gauge Pressure. _____

      _____ psig

   4) Determine the pressure drop. _____

      8.1.7.1: _____ psig minus,

      8.1.8.3: _____ psig equals:

      _____ Pressure Drop

   5) Verify Pressure Drop is ≤ 22 psig. _____

8.1 **Div 1 IA Piping Pressure Test** (cont'd)

9. Fill header restoration:

   1. Shut 1IA073, Remote Fill Isolation. **IV**___/___

   2. Shut 1IA133A, Low Point Drain. **IV**___/___

   3. Install cap at 1IA133A. **IV**___/___

10. Test pressure gauge removal:

   1. Shut 1IA-1144B, Isolation Valve To 1PI-IA082B. _____

   2. Vent off the test pressure gauge. _____

   3. Remove test pressure gauge. **IV**___/___

   4. Install 1PI-IA082B at original location. **IV**___/___

   5. Slowly open 1IA-1144B, Isolation Valve To 1PI-IA082B. **IV**___/___

   6. Notify RO/CRS that test pressure gauge has been removed. _____

11. Normal air supply header restoration:

   1) Shut 1IA098, Inst Air Capped Conn. **IV**___/___

   2) Replace pipe cap downstream of 1IA098. **IV**___/___

   3) Open:

      a) 1IA029A, Inst Air Amp A Outlt Isol **IV**___/___

      b) 1IA029B, Inst Air Amp B Outlt Isol **IV**___/___

      c) 1IA029C, Inst Air Amp C Outlt Isol **IV**___/___

      d) 1IA029D, Inst Air Amp D Outlt Isol **IV**___/___

      e) 1IA029E, Inst Air Amp E Outlt Isol **IV**___/___

      f) 1IA029F, Inst Air Amp F Outlt Isol **IV**___/___

8.1 **Div 1 IA Piping Pressure Test** (cont'd)

12. Div 2 ADS Instrument Air Supply Restoration

1) Open 1IA013B, ADS IA CNMT Inbd Isol Valve. **IV**___/___

2) Shut 1IA013A,
ADS IA CNMT Outbd Isol Valve as follows:

Place C/S for 1IA013A to CLOSE, then return it to AUTO. **IV**___/___

3) Place/verify the IA SYS DIV 2 IN TEST switch to NORMAL. *«LBD-4»* **IV**___/___

a) Verify NOT AVAILABLE IA/SA SYSTEMS DIVISION 2 annunciator (5041-7G) clears depending on existing plant conditions. _____

b) Verify IA DIV 2 MOVs IN TEST light deenergizes. _____

NOTE

If proceeding directly to Section 8.2, N/A the remaining Section 8.1 steps.

13. Div 1 ADS Instrument Air Supply Restoration

1) Open 1IA012B, ADS IA CNMT Inbd Isol Valve. **IV**___/___

2) Shut 1IA012A,
ADS IA CNMT Outbd Isol Valve as follows:

Place C/S for 1IA012A to CLOSE, then return it to AUTO. **IV**___/___

3) Place/verify the IA SYS DIV 1 IN TEST switch to NORMAL. *«LBD-4»* **IV**___/___

a) Verify NOT AVAILABLE IA/SA SYSTEMS DIVISION 1 annunciator (5041-7B) clears depending on existing plant conditions. _____

b) Verify IA DIV 1 MOVs IN TEST light deenergizes. _____

14. Verify the following alarms are clear:

1) LOSS OF INST AIR ADS RELIEF VLVS (5067-7L) _____

2) HIGH/LOW PRESSURE ADS IA SUPPLY (5040-6F) _____

8.2 Div 1 IA Air Header Chk Vlv, 1IA042B Test

NOTE

With 1IA012A handswitches in AUTO, 1IA012A will auto open when 1IA012B is fully closed.

1. Div 1 ADS Instrument Air Supply Setup

   ☞ OK to Initial as C/M if coming from Section 8.1.

   1) Place IA SYS DIV 1 IN TEST switch to TEST. _____

      a) Verify 5041-7B, NOT AVAILABLE IA/SA SYSTEMS DIVISION 1 annunciates. _____

      b) Verify IA DIV 1 MOV's IN TEST light energizes. _____

   2) Shut/verify shut:

      a) 1IA012A, ADS IA CNMT Outbd Isol Valve. _____

      b) 1IA012B, ADS IA CNMT Inbd Isol Valve. _____

2. Locally, at the DIV 1 ADS BACKUP AIR BOTTLES shut the following valves:

   1) 1IA829A, Comp Gas Bottle 1IA11TA Isol _____
   2) 1IA829B, Comp Gas Bottle 1IA11TB Isol _____
   3) 1IA829C, COMP GAS BOTTLE 1IA11TC Isol _____
   4) 1IA829D, Comp Gas Bottle 1IA11TD Isol _____
   5) 1IA829E, Comp Gas Bottle 1IA11TE Isol _____
   6) 1IA829F, Comp Gas Bottle 1IA11TF Isol _____
   7) 1IA829G, Comp Gas Bottle 1IA11TG Isol _____
   8) 1IA829H, Comp Gas Bottle 1IA11TH Isol _____
   9) 1IA830A, Comp Gas Bottle 1IA11TA Hdr Isol _____
   10) 1IA830B, Comp Gas Bottle 1IA11TB Hdr Isol _____
   11) 1IA830C, Comp Gas Bottle 1IA11TC Hdr Isol _____
   12) 1IA830D, Comp Gas Bottle 1IA11TD Hdr Isol _____
   13) 1IA830E, Comp Gas Bottle 1IA11TE Hdr Isol _____
   14) 1IA830F, Comp Gas Bottle 1IA11TF Hdr Isol _____
   15) 1IA830G, Comp Gas Bottle 1IA11TG Hdr Isol _____
   16) 1IA830H, Comp Gas Bottle 1IA11TH Hdr Isol _____

Initial

8.2 **Div 1 IA Air Header Chk Vlv, 1IA042B Test** (cont'd)

3. Verify 1IA097B, Div 1 ADS IA Drn is shut, then remove the pipe cap. _____

NOTE

High/Low Pressure ADS IA Supply Div 1 or 2 annunciator will energize when header pressure decreases to 140 psig (5040-6F).

4. Slowly open 1IA097B to depressurize the ADS Supply Header. _____

5. Flow meter installation:
   1) Notify RO/CRS that an air flow meter is to be connected to 1IA097B, Div 1 ADS IA Drn. _____
   2) Shut 1IA097B. _____
   3) Connect the Flow Meter downstream of drain valve 1IA097B. **CV** ___/___

6. Open 1IA012B, ADS IA CNMT Inbd Isol Valve. _____

7. (Record) VERY SLOWLY Throttle open 1IA097B, Div 1 ADS IA Drn to obtain ≥ 30 SCFM. _____

   Flow obtained: _____ SCFM

8. Test instrument change:
   1) Shut 1IA097B, Div 1 ADS IA Drn. _____
   2) Remove Flow Meter. **IV** ___/___
   3) Install test pressure gauge. **CV** ___/___
   4) Notify RO/CRS that the calibrated flow meter is removed and test gauge is installed at 1IA097B, Div 1 ADS IA Drn. _____

9. Open test gauge isolation valve. _____

10. Slowly open 1IA097B, and verify indicated pressure > 100 psig. _____

8.2 **Div 1 IA Air Header Chk Vlv, 1IA042B Test** (cont'd)

11. Shut 1IA012B, ADS IA CNMT Inbd Isol Valve. _____

12. Open 1IA012A, ADS IA CNMT Outbd Isol Valve _____

13. Remove the cap and open 1IA096C to depressurize piping UPSTREAM of 1IA042B. _____

14. Verify IA piping upstream of 1IA042B depressurized. _____

15. Allow pressure to stabilize at test gauge installed at 1IA097B. _____

16. (Record) Initial pressure reading:

    1) Record test gauge pressure at 1IA097B. _____

       Pressure: _____ psig

    2) Start the stopwatch. _____

    3) Shut test pressure gauge isolation valve. _____

17. After 10 minutes,

    1) Open the test gauge isolation valve. _____

    2) Record the total elapsed time. _____

       _____ time (minutes) (≥ 10 min)

    3) Record the final Test Gauge Pressure. _____

       _____ psig

    4) Determine the pressure drop. _____

       8.2.16.1: _____ psig minus,

       8.2.17.3: _____ psig equals:

       _____ Pressure Drop

    5) Verify Pressure Drop is ≤ 2 psig. _____

8.2 **Div 1 IA Air Header Chk Vlv, 1IA042B Test** (cont'd)

18. Test gauge removal:
    1) Shut 1IA097B, Div 1 ADS IA Drn. **IV** ___/___
    2) Remove the test gauge. **IV** ___/___
    3) Replace the pipe cap. **IV** ___/___
    4) Notify RO/CRS that the test gauge is removed from 1IA097B, Div 1 ADS IA Drn. _____

19. Shut and cap 1IA096C. **IV** ___/___

20. Open the following valves:
    1) 1IA829A, Comp Gas Bottle 1IA11TA Isol **IV** ___/___
    2) 1IA829B, Comp Gas Bottle 1IA11TB Isol **IV** ___/___
    3) 1IA829C, COMP GAS BOTTLE 1IA11TC Isol **IV** ___/___
    4) 1IA829D, Comp Gas Bottle 1IA11TD Isol **IV** ___/___
    5) 1IA829E, Comp Gas Bottle 1IA11TE Isol **IV** ___/___
    6) 1IA829F, Comp Gas Bottle 1IA11TF Isol **IV** ___/___
    7) 1IA829G, Comp Gas Bottle 1IA11TG Isol **IV** ___/___
    8) 1IA829H, Comp Gas Bottle 1IA11TH Isol **IV** ___/___
    9) 1IA830A, Comp Gas Bottle 1IA11TA Hdr Isol **IV** ___/___
    10) 1IA830B, Comp Gas Bottle 1IA11TB Hdr Isol **IV** ___/___
    11) 1IA830C, Comp Gas Bottle 1IA11TC Hdr Isol **IV** ___/___
    12) 1IA830D, Comp Gas Bottle 1IA11TD Hdr Isol **IV** ___/___
    13) 1IA830E, Comp Gas Bottle 1IA11TE Hdr Isol **IV** ___/___
    14) 1IA830F, Comp Gas Bottle 1IA11TF Hdr Isol **IV** ___/___
    15) 1IA830G, Comp Gas Bottle 1IA11TG Hdr Isol **IV** ___/___
    16) 1IA830H, Comp Gas Bottle 1IA11TH Hdr Isol **IV** ___/___

8.2 **Div 1 IA Air Header Chk Vlv, 1IA042B Test** (cont'd)

NOTE

If proceeding directly to Section 8.1, N/A the remaining Section 8.2 steps.

21. Div 1 ADS Instrument Air Supply Restoration

    1) Open 1IA012B, ADS IA CNMT Inbd Isol Valve. **IV** ___/___

    2) Shut 1IA012A,
       ADS IA CNMT Outbd Isol Valve as follows:

       Place C/S for 1IA012A to CLOSE, then return it to AUTO. **IV** ___/___

    3) Place/verify the IA SYS DIV 1 IN TEST switch to NORMAL. *«LBD-4»* **IV** ___/___

       a) Verify NOT AVAILABLE IA/SA SYSTEMS DIVISION 1 annunciator (5041-7B) clears depending on existing plant conditions. _____

       b) Verify IA DIV 1 MOVs IN TEST light deenergizes. _____

22. Verify the following alarms are clear:

    1) LOSS OF INST AIR ADS RELIEF VLVS (5067-7L) _____

    2) HIGH/LOW PRESSURE ADS IA SUPPLY (5040-6F) _____

8.3 **Notification**

SMngt notified of test completion.

_____/_____ _____
Date Time

SUPPLEMENTAL REVIEW SHEET

Corrective Action Taken

Operability Requirements:

ITS LCOs: 3.4.4 3.5.1 3.6.1.6

ORM ORs: 2.5.2

ODCM ORs: None

As applicable:

Initiated Condition Report No. _____

Initiated Work Document No. _____

Comments/Deficiencies

_____

_____

_____

_____

_____

_____

_____

_____

_____

_____

_____

_____

_____

_____

_____

_____

Review and Approval

Cognizant Plant Engineer: _____
(ISI Pump and Valve) (Signature) (Date)

Surveillance Coordinator: _____
(Signature) (Date)

ATTACHMENT 5

CPS 9061.11C003
"Div. 2 SRV/IA Tests"

DIV 2 SRV/IA TESTS [For Div 2 SRV 1B21-F0_____]

SCOPE OF REVISION:

- Total rewrite - rev. marks not used (Specific Rev. 3a dispositioned in rewrite):

  Consolidation of C005, C006, C007, C008 procedure sections relating to Div 2 SRV Actuations into a stand alone checklist, including all data collection.
  - ITS amendment (U-603495) eliminates requirement to open each SRV in ITS SR 3.4.4.3, 3.5.1.7, 3.6.1.6.1. Verification of actuator stroking is the new ITS METHOD 2 criteria. Slow closure rig in no longer required.
  - Updated applicable items to reflect the ITS change and the ISI relief request #2204 for eliminating SRV stroke time/position verifications.
  - All previous LSF overlaps are still satisfied.

  This reformation/restructuring supports the rewrite of the Div 2 IA Piping Test sections into a stand alone C004.

CONTINUOUS USE

ORIGINATOR: *Thomas J. Landin* **CLASS CODE:** *SNNI1*

SQR: *Dale Shelton* **APPROVAL DATE:** *APR 01 2002*

CURRENT CHANGES TO GENERAL REVISION

	Change #	Date	List of Affected Pages
❶			
❷			
❸			
❹			
❺			

Div 2 SRV being tested: _____

5.0 PREREQUISITES

5.1 Pre-Planning Information

1. This is a stand alone performance checklist, therefore the base procedure is not required to perform the procedure actions.

   This checklist is written for performance of one SRV. Use a separate checklist for each SRV being tested.

   Portions of the checklist which are not being used shall be N/A'd prior to starting work.

   All ISI data is recorded and retained in the procedure.

2. Multiple SRV's can be tested concurrently.

   The procedure is structured to flow from 8.1 through 8.4 with minimal condition changes, however the sections can be performed in any order.

   The number of available gauges and personnel will be the only limitation to the number of SRV's which can be tested at in any one sequence.

3. Sections 8.1, 8.2 and 8.3 require the SRV Actuator to be disconnected.

   Prerequisite 5.11 and Restoration 8.5.2 steps provide the documented Mech Maint configuration control for the SRV Actuator.

   Appropriate Clearances and Work Requests will need to be generated as part of the planning package.

Div 2 SRV being tested: _____

5.0 **PREREQUISITES** (cont'd)

5.1 **Pre-Planning Information** (cont'd)

4. Section 8.1 tests SRV Actuators Using both the "A" and "B" Solenoids in the MCR.
   - Tests Div 2 SRVs - 1B21-F041B, F041D, F041F, F051D
   - Required each refueling cycle
   - Satisfies ITS SR's 3.4.4.2, 3.4.4.3, 3.5.1.7, 3.6.1.6.1 requirements

   Partially satisfies LSF overlaps in ITS SR's 3.3.5.1.5 T4.a - T4.h, 3.3.5.1.5 T5.a - T5.g, 3.3.6.5.4, 3.5.1.6, 3.6.1.6.2

   Verifying each SRV valve actuator strokes when manually actuated (Method 2) using the "A" and "B" solenoids.

5. Section 8.2 tests SRV Actuators Using both the Div 1 and Div 2 Solenoids from the RSP.
   - Tests Div 2 RSP SRV - 1B21-F051D
   - Required each refueling cycle
   - Satisfies ITS SR 3.3.3.2.2: Verifying each RSP SRV control circuit and transfer switch is capable of performing it's intended function.
     - ☞ Partially satisfies CPS 9027.01C006 - Section 8.6.1 SRV Actuations only.

6. Section 8.3 tests the Div 2 Check Valves.
   - Tests Div 2 SRVs Check Valves - 1IA042A; and 1B21-F036R, F039B, F039D, F039E
   - Required each refueling cycle
   - Satisfies ISI Pressure Drop Test (SRV Open/Closed)
   - Satisfies SSER 5: Leak testing ADS air supply check valves and pneumatic actuators
   - Temp pressure gauge required

7. Section 8.4 tests the Div 2 SRV Accum Supply Check Valves.
   - Tests Div 2 SRVs Check Valves
   - Required each refueling cycle
   - Satisfies ISI Full Flow to OPEN Test
   - Satisfies NRC GL 89-04: Full Flow Exercise of designated check valves in the IA supply lines
   - Temp flow meter required

Div 2 SRV being tested: _____

5.0 **PREREQUISITES** (cont'd)

5.2 Document on Title Page and in all double underlined blanks the Div 2 SRV EIN being tested.

N/A any sections/steps not being used for this SRV.

SRV: _____ _____

5.3 (Initial) In conjunction with the SMngt, review the following impact statements to determine required plant status to perform this test:

OPERABILITY IMPACTED:

ITS LCO 3.3.3.2, 3.4.4, 3.5.1, 3.6.1.6

ORM OR 2.5.2: MOV Thermal Overload Protection

SYSTEMS IMPACTED:

AFFECTED ANNUNCIATORS AND COMPUTER POINTS:

5041-7G, Not Available IA/SA Systems Division 2
5067-7L, Loss of Inst Air ADS Relief Vlvs
5063-6A, Remote Shtdn Transfer Sw In Emerg Pos

RPS TRIP: N/A

CRVICS ISOLATION: N/A

REQUIRED OPERABLE CHANNELS: N/A

COINCIDENT CHANNELS THAT PREVENT ACTUATION: N/A

PLANT/SYSTEM CONDITIONS REQUIRED TO CONDUCT THIS TEST:

- MODE 4 or 5
- SRVs will not be available for alternate SDC.
- ADS not required operable MODEs 4 or 5

Impact Matrix discussed. _____ / _____
SMngt Performer

Initial

Div 2 SRV being tested: _____

5.0 **PREREQUISITES** (cont'd)

5.4 Verify Plant Air System is in Operation as per CPS 3214.01, Plant Air (IA & SA), or CPS 3214.03, Temporary Service Air. _____

5.5 Verify Reactor vessel is in MODE 4 or 5. _____

5.6 Verify the drywell has been evaluated to be accessible. _____

5.7 Generate a CPS 1512.01F007, Post Calibration Check Sheet, for each instrument listed in 7.0. _____

5.8 Check the calibration due date of test equipment to be used, to ensure calibration is up-to-date. _____

5.9 Verify communications established as necessary. _____

5.10 Obtain permission from SMngt to perform this procedure.

_____ / _____ _____

Date Time SMngt

Div 2 SRV being tested: _____

5.0 **PREREQUISITES** (cont'd)

5.11 Mech Maint uncouple the SRV actuator as follows. (N/A if only section 8.4 being performed)

Uncoupling SRV _____ Actuator (Refer to Appendix A)

1. Verify working on **SRV** _____. _____

2. Straighten tab washer (BA) on stem. _____

3. Remove nut (AH) from stem. _____

4. Remove tab washer (BA) from stem. _____

5. (Record) Measure from top of stem (V) to top of bushing (AJ). **CV** ___/___

   Measurement to be 3 decimal places.

   Measurement: _____

6. Ensure the threads are clean and undamaged, THEN carefully (by hand only), unscrew roller bearing assembly (AJ) until there is at least a 1.75 inch gap between the roller bearings (AP) and the hardened blocks (BC). _____

7. Notify MCR that **SRV** _____ actuator has been uncoupled. _____

Div 2 SRV being tested: _____

7.0 **MATERIALS/TEST EQUIPMENT**

7.1 (Record below) Stopwatch
[Range: 0 - 40 min, Accuracy: ± 0.10 sec/40 min, Minor Divisions: N/A; or equivalent stopwatch.]

7.2 (Record below) Pressure gauge

0 - 200 psig test gauge
(± 0.25% accuracy with 1 psig increments)
or equivalent and valves (see below).

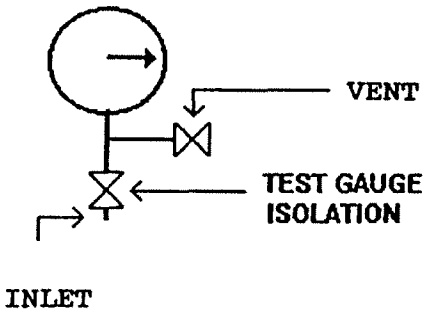

7.3 (Record below) A flow meter capable of measuring 10 - 30 SCFM, ±2% accuracy or equivalent.

Description	M&TE No.	Cal. Due Date	

Div 2 SRV being tested: _____

8.0 **PROCEDURE**

8.1 **SRV Actuator Test**

8.1.1 Using MCR SRV "A" Solenoid *«LBD-1, LBD-2»*

☞ This sub-section may be N/A'd if Section 8.3 will be performed, as it utilizes the MCR SRV "A" Solenoid, and therefore fully satisfies the surveillance requirements.

1. Verify operator stationed at **SRV** _____ and in communication with the MCR. _____

2. At 1H13-P601, place **SRV** _____ control switch to OPEN. _____

3. (Drywell) Verify SRV actuator stroked open. _____

4. At 1H13-P601, place **SRV** _____ control switch to AUTO. **IV** ___/___

5. (Drywell) Verify SRV actuator stroked shut. _____

8.1.2 Using MCR SRV "B" Solenoid *«LBD-1, LBD-2»*

1. Verify operator stationed at **SRV** _____ and in communication with the MCR. _____

2. At 1H13-P642, place **SRV** _____ control switch to OPEN. _____

3. (Drywell) Verify SRV actuator stroked open. _____

4. At 1H13-P642, place **SRV** _____ control switch to AUTO. **IV** ___/___

5. (Drywell) Verify SRV actuator stroked shut. _____

Div 2 SRV being tested: _____

8.2 **Remote Shutdown Panel (RSP) SRV Actuator Test**

☞ Only applicable for SRV 1B21-F051D.

8.2.1 Using RSP SRV Div 1 Solenoid *«LBD-3»*

1. Verify the following RSP Div 1 SRV solenoid control switches are in CLOSE.
   1) B21C-F051C control switch C61A-S48 _____
   2) B21C-F051D control switch C61A-S49 _____
   3) B21C-F051G control switch C61A-S58 _____
2. Place RSP Transfer Switch C61-S10 in EMERG. _____
3. (MCR) Verify annunciator REMOTE SHTDN TRANSFER SW IN EMERG POS (5063-6A) alarms, or is already due to another transfer switch being in EMERG. _____
4. Verify operator stationed at **SRV 1B21-F051D** and in communication with the MCR. _____
5. Place RSP Div 1 **SRV 1B21-F051D** control switch C61A-S49 to OPEN. _____
6. (Drywell) Verify SRV actuator stroked open. _____
7. Place RSP Div 1 **SRV 1B21-F051D** control switch C61A-S49 to CLOSE. **IV** ___ / ___
8. (Drywell) Verify SRV actuator stroked shut. _____
9. Return RSP Transfer Switch C61-S10 to NORMAL. **IV** ___ / ___
10. (MCR) Verify annunciator REMOTE SHTDN TRANSFER SW IN EMERG POS (5063-6A) clears, or remains in due to another transfer switch being in EMERG. _____

Div 2 SRV being tested: _____

8.2 **Remote Shutdown Panel (RSP) SRV Actuator Test** (cont'd)

☞ Only applicable for SRV 1B21-F051D.

8.2.2 Using RSP SRV Div 2 Solenoid *«LBD-3»*

1. Verify the following RSP Div 2 SRV solenoid control switches are in CLOSE.
   1) B21C-F051C control switch C61-HS524 _____
   2) B21C-F051D control switch C61-HS525 _____
   3) B21C-F051G control switch C61-HS526 _____
2. Place RSP Transfer Switch C61-HS527 in EMERG. _____
3. (MCR) Verify annunciator REMOTE SHTDN TRANSFER SW IN EMERG POS (5063-6A) alarms, or is already due to another transfer switch being in EMERG. _____
4. Verify operator stationed at **SRV 1B21-F051D** and in communication with the MCR. _____
5. Place RSP Div 2 **SRV 1B21-F051D** control switch C61-HS525 to OPEN. _____
6. (Drywell) Verify SRV actuator stroked open. _____
7. Place RSP Div 2 **SRV 1B21-F051D** control switch C61-HS525 to CLOSE. **IV** ___ / ___
8. (Drywell) Verify SRV actuator stroked shut. _____
9. Return RSP Transfer Switch C61-HS527 to NORMAL. **IV** ___ / ___
10. (MCR) Verify annunciator REMOTE SHTDN TRANSFER SW IN EMERG POS (5063-6A) clears, or remains in due to another transfer switch being in EMERG. _____

Div 2 SRV being tested: _____

8.3 **SRV IA Check Valves/Air Actuator Test**

1. Notify the RO/CRS that a test gauge and valves are to be installed on the SRV's 1B21-F082(81) instrument air drain valve. _____

2. For applicable SRV being tested (N/A others):

   Verify valve is shut, remove pipe cap and install test gauge with isolation valve.

   1) Div 2: SRV 41B (DW 761', AZM 255)
      1B21-F082B, SRV 41B Inst Air Drain. **CV** ___/___
   2) Div 2: SRV 41D (DW 764', AZM 308)
      1B21-F082D, SRV 41D Inst Air Drain. **CV** ___/___
   3) Div 2: SRV 41F (DW 761', AZM 280)
      1B21-F082E, SRV 41F Inst Air Drain. **CV** ___/___
   4) Div 2: SRV 51D (DW 768', AZM 328)
      1B21-F081R, SRV 51D Inst Air Drain. **CV** ___/___

NOTE

With 1IA013A handswitches in AUTO, 1IA013A will auto open when 1IA013B is fully closed.

3. Div 2 ADS Instrument Air Supply Setup

   ☞ OK to Initial as C/M if coming from Section 8.4.

   ☞ This step common to other Div 2 valves being tested as a package. OK to initial for C/M.

   1) Place IA SYS DIV 2 IN TEST switch to TEST. _____
      a) Verify 5041-7G, NOT AVAILABLE IA/SA SYSTEMS DIVISION 2 in alarm. _____
      b) Verify IA DIV 2 MOV's IN TEST light energizes. _____
   2) Verify 5067-7L, LOSS OF INST AIR ADS RELIEF VLVS is clear. _____
   3) Shut/verify shut 1IA013A, ADS IA CNMT Outbd Isol Valve. _____
   4) Shut 1IA013B, ADS IA CNMT Inbd Isol Valve. _____

Initial

Div 2 SRV being tested: _____

8.3 **SRV IA Check Valves/Air Actuator Test** (cont'd)

4. Verify shut the test gauge isolation valve. _____

5. Slowly open the applicable SRV's 1B21-F082(81) inst air drain valve. _____

6. Open the test gauge isolation valve. _____

7. Verify that there are no noticeable air leaks downstream of the check valve. _____

NOTE

High/Low Pressure ADS IA Supply Div 1 Or 2 annunciator will energize when header pressure lowers to 140 psig (5040-6F).

8. Depressurize the Div 2 IA header:

   ☞ This step common to other Div 2 valves being tested as a package. OK to initial for C/M.

   1) Verify shut 1IA097A, Div 2 ADS Drn Vlv. _____

   2) Remove pipe cap downstream of 1IA097A. _____

   3) Slowly open 1IA097A. _____

9. Actuating the SRV (using 'A' Solenoid) *«LBD-1, LBD-2»*

   1) Verify operator stationed at **SRV** _____ and in communication with the MCR. _____

   2) At 1H13-P601, place **SRV** _____ control switch to OPEN. _____

   3) (Drywell) Verify SRV actuator stroked open. _____

Div 2 SRV being tested: _____

8.3 **SRV IA Check Valves/Air Actuator Test** (cont'd)

10. Pressure Drop Test (SRV OPEN)

1) Allow pressure to stabilize on the test pressure gauge, then record the Test Gauge Pressure. _____

_____ psig

2) Start the stop watch. _____

3) Shut the test gauge isolation valve. _____

4) After 108 minutes (31 minutes for 1B21-F051D),

a) Open the test gauge isolation valve. _____

b) Record the total elapsed time. _____

_____ minutes (≥ 108[31] min)

5) Record the final Test Gauge Pressure. _____

_____ psig

6) Determine the pressure drop. _____

8.3.10.1: _____ psig minus,
8.3.10.5: _____ psig equals:

_____ Pressure Drop

7) Verify Pressure Drop is ≤ 1.5 psig. _____

11. At 1H13-P601, place **SRV** _____ control switch to AUTO. **IV** ___/___

12. (Drywell) Verify SRV actuator stroked shut. _____
«LBD-1, LBD-2»

Div 2 SRV being tested: _____

8.3 **SRV IA Check Valves/Air Actuator Test** (cont'd)

13. Pressure Drop Test (SRV CLOSED)

1) Allow pressure to stabilize on the test pressure gauge, then record the Test Gauge Pressure. _____

_____ psig

2) Start the stop watch. _____

3) Shut the test gauge isolation valve. _____

4) After 108 minutes (31 minutes for 1B21-F051D),

a) Open the test gauge isolation valve. _____

b) Record the total elapsed time. _____

_____ minutes (≥ 108[31] min)

5) Record the final Test Gauge Pressure. _____

_____ psig

6) Determine the pressure drop. _____

8.3.13.1: _____ psig minus,
8.3.13.5: _____ psig equals:

_____ Pressure Drop

7) Verify Pressure Drop is ≤ 1.5 psig. _____

14. Shut and cap 1IA097A, Div 2 ADS Drn Vlv. **IV** ___/___

☞ This step common to other Div 2 valves being tested as a package. OK to initial for C/M.

Div 2 SRV being tested: _____

8.3 **SRV IA Check Valves/Air Actuator Test** (cont'd)

15. Pressure Test Gauge Removal

For applicable SRV (N/A others):

Shut/verify shut the 1B21-F082(81) Inst Air Drain,
shut the test gauge isolation valve,
vent off the test gauge,
remove the test gauge, and
IF Section 8.4 is not being performed next,
THEN Re-install the pipe cap.

1) Div 2: SRV 41B (DW 761', AZM 255)
1B21-F082B, SRV 41B Inst Air Drain. **IV** ___/___

2) Div 2: SRV 41D (DW 764', AZM 308)
1B21-F082D, SRV 41D Inst Air Drain. **IV** ___/___

3) Div 2: SRV 41F (DW 761', AZM 280)
1B21-F082E, SRV 41F Inst Air Drain. **IV** ___/___

4) Div 2: SRV 51D (DW 768', AZM 328)
1B21-F081R, SRV 51D Inst Air Drain. **IV** ___/___

16. If section 8.1, 8.2, and 8.3 are complete, then restore SRV actuator connection per 8.5.2 while continuing in the procedure.

Div 2 SRV being tested: _____

8.4 SRV IA Accum Supply Chk Vlvs Full Flow to OPEN Test

NOTE

With 1IA013A handswitches in AUTO, 1IA013A will auto open when 1IA013B is fully closed.

1. Div 2 ADS Instrument Air Supply Setup

   ☞ OK to Initial as C/M if coming from Section 8.3.

   ☞ This step common to other Div 2 valves being tested as a package. OK to initial for C/M.

   1) Place IA SYS DIV 2 IN TEST switch to TEST. _____

      a) Verify 5041-7G, NOT AVAILABLE IA/SA SYSTEMS DIVISION 2 in alarm. _____

      b) Verify IA DIV 2 MOV's IN TEST light energizes. _____

   2) Verify 5067-7L, LOSS OF INST AIR ADS RELIEF VLVS is clear. _____

   3) Shut/verify shut 1IA013A, ADS IA CNMT Outbd Isol Valve. _____

   4) Shut 1IA013B, ADS IA CNMT Inbd Isol Valve. _____

2. At AB MCC 1B3-7A (1AP77E), turn off both breakers for 1IA013B, ADS Supply Header Inboard Isol Valve. _____

   ☞ This step common to other Div 2 valves being tested as a package. OK to initial for C/M.

Div 2 SRV being tested: _____

8.4 **SRV IA Accum Supply Chk Vlvs Full Flow to OPEN Test** (cont'd)

NOTE

Each SRV IA check valve shall be tested individually, one at a time.

5067-7L, LOSS OF INSTR AIR ADS RELIEF VLVS will be received.

3. For applicable SRV IA being tested (N/A others):

   Verify valve is shut, remove/verify removed pipe cap, and then slowly open the valve to depressurize the SRV accumulator.

   1) Div 2: SRV 41B (DW 761', AZM 255)
      1B21-F082B, SRV 41B Inst Air Drain. _____

   2) Div 2: SRV 41D (DW 764', AZM 308)
      1B21-F082D, SRV 41D Inst Air Drain. _____

   3) Div 2: SRV 41F (DW 761', AZM 280)
      1B21-F082E, SRV 41F Inst Air Drain. _____

   4) Div 2: SRV 51D (DW 768', AZM 328)
      1B21-F081R, SRV 51D Inst Air Drain. _____

4. Flowmeter Installation

   1) Shut the SRV's 1B21-F082(81) Inst Air Drain valve. _____

   2) Install the air flowmeter at the SRV's 1B21-F082(81) Inst Air Drain valve. **CV** ___ / ___

Div 2 SRV being tested: _____

8.4 **SRV IA Accum Supply Chk Vlvs Full Flow to OPEN Test** (cont'd)

NOTE

The following two steps are to be performed simultaneously.

5. Slowly manually throttle open 1IA013B, ADS IA CNMT Inbd Isol Valve. _____

6. (Record) Slowly throttle open the SRV's 1B21-F082(81) Inst Drain Air valve until ≥ 10 SCFM (≥ 30 SCFM for SRV 41D/F036R) is obtained. _____

   _____ SCFM obtained

7. Manually shut 1IA013B, ADS IA CNMT Inbd Isol Valve. _____

8. Shut the SRV's 1B21-F082(81) Inst Air Drain valve. _____

NOTE

At the completion of all Div 2 SRV check valve flow tests, perform the following steps prior to system restoration.

9. Manually slowly open 1IA013B, ADS IA CNMT Inbd Isol Valve ~ 25% until system is re-pressurized to normal operating pressure. _____

   ☞ This step common to other Div 2 valves being tested as a package. OK to initial for C/M.

Div 2 SRV being tested: _____

8.4 **SRV IA Accum Supply Chk Vlvs Full Flow to OPEN Test** (cont'd)

10. Flow Test Gauge Removal

For applicable SRV (N/A others):

Shut/verify shut the 1B21-F082(81) Inst Air Drain,
shut the test gauge isolation valve,
vent off the test gauge,
remove the flow test gauge, and
IF Section 8.3 is not being performed next,
THEN Re-install the pipe cap.

1) Div 2: SRV 41B (DW 761', AZM 255)
1B21-F082B, SRV 41B Inst Air Drain. **IV** ___/___

2) Div 2: SRV 41D (DW 764', AZM 308)
1B21-F082D, SRV 41D Inst Air Drain. **IV** ___/___

3) Div 2: SRV 41F (DW 761', AZM 280)
1B21-F082E, SRV 41F Inst Air Drain. **IV** ___/___

4) Div 2: SRV 51D (DW 768', AZM 328)
1B21-F081R, SRV 51D Inst Air Drain. **IV** ___/___

11. Notify RO/CRS that test gauges and valves have been removed from SRV IA drains. _____

Div 2 SRV being tested: _____

8.5 **RESTORATION**

8.5.1 **1IA013B Restoration**

(N/A if section 8.3 or 8.4 not used)

☞ Section 8.5.1 is common to other Div 2 valves being tested as a package. OK to NOTE out referencing which SRV checklist was utilized for the restoration.

1. At AB MCC 1B3-7A (1AP77E), turn on both breakers for 1IA013B, ADS Supply Header Inboard Isol Valve. **IV** ___/___ **IV** ___/___

2. Stroke 1IA013B, ADS IA CNMT Inbd Isol Valve as follows to restore operability:
   1) Open 1IA013B. _____
   2) Shut 1IA013B. _____
   3) Open 1IA013B. **IV** ___/___

3. Shut 1IA013A, ADS IA CNMT Outbd Isol Valve as follows:

   Place C/S for 1IA013A to CLOSE, then return it to AUTO. **IV** ___/___

4. Place/verify the IA SYS DIV 2 IN TEST switch to NORMAL. *«LBD-4»* **IV** ___/___
   1) Verify NOT AVAILABLE IA/SA SYSTEMS DIVISION 2 annunciator (5041-7G) clears depending on existing plant conditions. _____
   2) Verify IA DIV 2 MOVs IN TEST light deenergizes. _____

5. Verify the following alarms clear:
   1) LOSS OF INST AIR ADS RELIEF VLVS (5067-7L) _____
   2) HIGH/LOW PRESSURE ADS IA SUPPLY (5040-6F) _____

Div 2 SRV being tested: _____

8.5 **RESTORATION** (cont'd)

8.5.2 Mech Maint recouple the SRV actuator as follows. (N/A if only section 8.4 being performed)

Re-coupling SRV Actuator (Refer to Appendix A)

1. Carefully (by hand only), screw roller bearing assembly (AJ) down the stem until measurement from top of stem (V) to top of bushing (AJ) is the same as measurement taken in step 5.11.5. **CV** ___ / ___

   ☞ Roller bearing assembly may also be set using the zero clearance method IAW CPS 8216.03, Section 8.2.2.3 or 8.4.2.5 as applicable.

2. Install tab washer (BA) and locknut (AH). **IV** ___ / ___

3. Tighten locknut (AH) while ensuring roller bearing assembly (AJ) does not move. **CV** ___ / ___

4. Bend tab washer (BA) into place on locknut (AH). **IV** ___ / ___

5. Notify MCR that **SRV** _____ actuator has been recoupled. _____

8.6 **NOTIFICATION**

Notify SMngt of test completion on **SRV** _____.

_____ / _____ _____
Date Time

APPENDIX A

SRV ZERO CLEARANCE

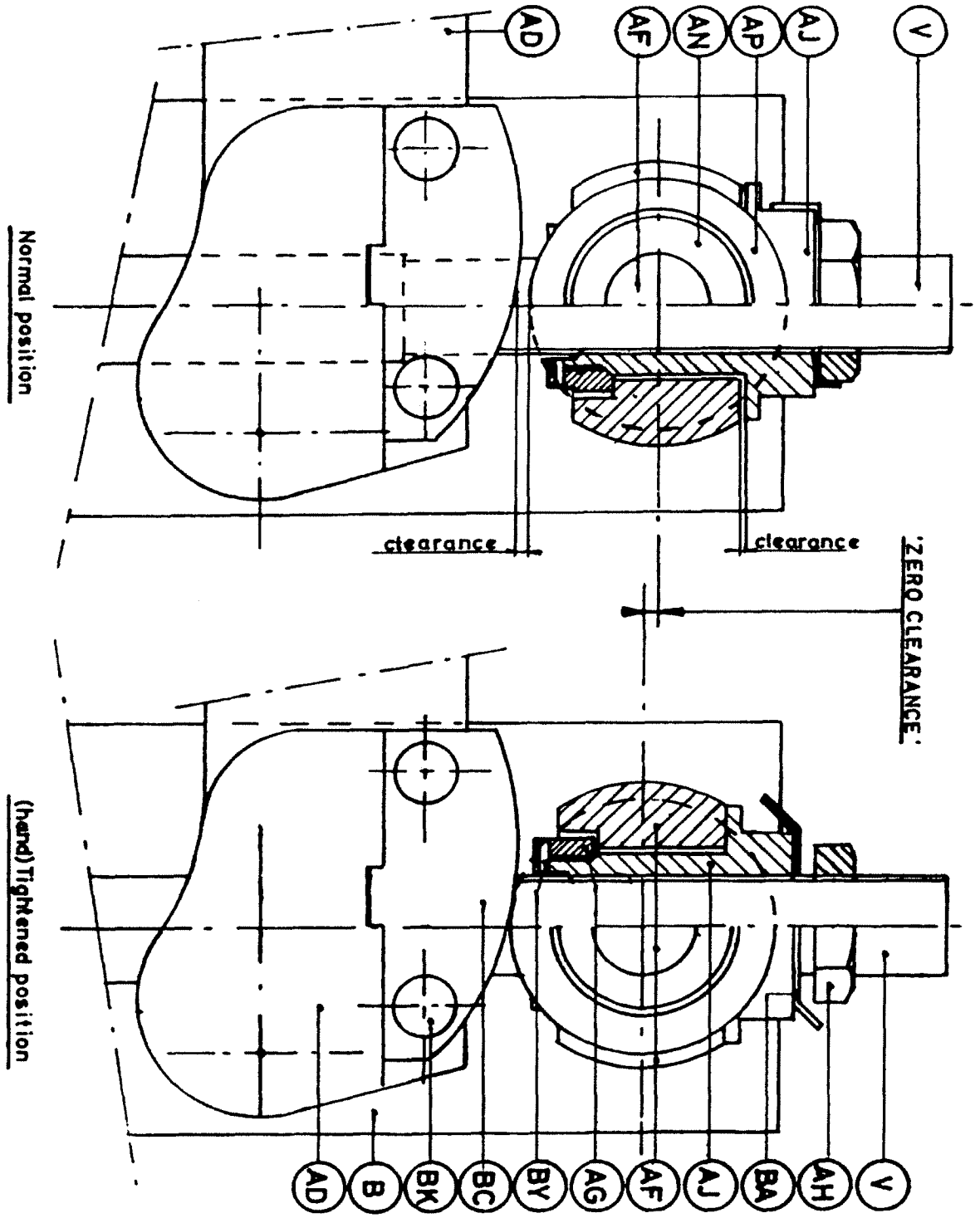

SUPPLEMENTAL REVIEW SHEET

Corrective Action Taken

Operability Requirements:

ITS LCOs: 3.3.3.2 3.3.5.1 3.3.6.5 3.4.4 3.5.1 3.6.1.6

ORM ORs: None

ODCM ORs: None

As applicable:

Initiated Condition Report No. _____

Initiated Work Document No. _____

Comments/Deficiencies

_____

Review and Approval

Cognizant Plant Engineer: _____
(ISI Pump and Valve) (Signature) (Date)

Surveillance Coordinator: _____
(Signature) (Date)

ATTACHMENT 6

CPS 9061.11C004
"Div. 2 IA Piping/Check Valve Tests"

DIV 2 IA PIPING/CHECK VALVE TESTS

SCOPE OF REVISION:

- Major revision to support C1R08 activities - no rev marks used.

  Consolidation of C005, C006, C007, C008 procedure sections relating to Div 2 IA Piping Tests into a stand alone checklist, including all data collection.

  This reformation/restructuring supports the rewrite of the Div 2 SRV Actuation sections into a stand alone C003.

  Technical content has not changed in this revision, only the simplification and organization of procedure actions.

CONTINUOUS USE

ORIGINATOR: *Thomas J. Landin* **CLASS CODE:** *SNNI1*

ITR: *Dale Shelton* **APPROVAL DATE:** *APR 01 2002*

CURRENT CHANGES TO GENERAL REVISION

	Change #	Date	List of Affected Pages
❶			
❷			
❸			
❹			
❺			

5.0 PREREQUISITES

5.1 Pre-Planning Information

1. This is a stand alone performance checklist, therefore the base procedure is not required to perform the procedure actions.

   Section 8.1 and 8.2 can be performed in either order.

   All ISI data is recorded and retained in the procedure.

2. Section 8.1 tests Div 2 IA Piping.
   - Satisfies ISI Flow Requirements
   - Required each alternating refueling cycle
   - Temp pressure gauge required

3. Section 8.2 tests the 1IA042A, Div 2 IA Air Header Check Valve.
   - Satisfies ISI Exercise/Flow Requirements
   - Required each refueling cycle
   - Temp flow meter required
   - Temp pressure gauge required

4. During section 8.2, Div 1 ADS Valves 41C, 47A, 47C, 51G and LLS SRV 51C will be isolated from the normal air amplifier supply.

   If these valves are being used for Alternate Shutdown Cooling credit, their backup air supply is required.

5.0 **PREREQUISITES** (cont'd)

5.2 (Initial) In conjunction with the SMngt, review the following impact statements to determine required plant status to perform this test:

OPERABILITY IMPACTED:

ITS LCO's 3.4.4, 3.5.1, 3.6.1.6

ORM OR 2.5.2: MOV Thermal Overload Protection

☞ Operate MOV test prep switches IA SYS DIV 1 IN TEST and IA SYS DIV 2 IN TEST as needed to operate valves IAW OP-CL-101-301-1001 and ORM 2.5.2.

SYSTEMS IMPACTED:

AFFECTED ANNUNCIATORS AND COMPUTER POINTS:

5040-6F, HIGH/LOW PRESSURE ADS IA SUPPLY
5041-7B, NOT AVAILABLE IA/SA SYSTEMS DIVISION 1
5041-7G, NOT AVAILABLE IA/SA SYSTEMS DIVISION 2
5067-7L, LOSS OF INST AIR ADS RELIEF VLVS

RPS TRIP: N/A

CRVICS ISOLATION: N/A

REQUIRED OPERABLE CHANNELS: N/A

COINCIDENT CHANNELS THAT PREVENT ACTUATION: N/A

PLANT/SYSTEM CONDITIONS REQUIRED TO CONDUCT THIS TEST:

- MODE 4 or 5
- SRVs will not be available for alternate SDC.
- ADS not required operable MODEs 4 or 5

Impact Matrix discussed. _____ / _____
SMngt Performer

5.3 Verify Plant Air System is in Operation as per CPS 3214.01, Plant Air (IA & SA), or CPS 3214.03, Temporary Service Air. _____

1. Verify ADS DIV 2 IA BACKUP AIR BOTTLES are charged to ≥ 2300 psig. _____

5.4 Verify Reactor vessel is in MODE 4 or 5. _____

Initial

5.0 **PREREQUISITES** (cont'd)

5.5 Verify the drywell has been evaluated to be accessible. _____

5.6 Generate a CPS 1512.01F007, Post Calibration Check Sheet, for each instrument listed in 7.0. _____

5.7 Check the calibration due date of test equipment to be used, to ensure calibration is up-to-date. _____

5.8 Verify communications established as necessary. _____

5.9 Obtain permission from SMngt to perform this procedure.

_____ / _____ _____
Date Time SMngt

5.10 Install test pressure gauge (0 - 2500 psig) on DIV 2 ADS BACKUP AIR BOTTLE HEADER as follows:

☞ May be deferred until needed in step 8.1.6.

1) Notify RO/CRS that a test pressure gauge will be installed. _____

2) At the DIV 2 ADS BACKUP AIR BOTTLE storage area, shut 1IA-1144A, Isolation Valve To 1PI-IA082A. _____

3) Carefully vent and disconnect the isolated pressure gauge 1PI-IA082A. _____

4) Install the test pressure gauge (0 - 2500 psig). **CV** ___ / ___

5) Open 1IA-1144A, Isolation Valve To 1PI-IA082A. _____

7.0 MATERIALS/TEST EQUIPMENT

7.1 (Record below) Stopwatch
[Range: 0 - 40 min, Accuracy: ± 0.10 sec/40 min, Minor Divisions: N/A; or equivalent stopwatch.]

7.2 (Record below) Pressure gauge
0 - 2500 psig 16″ Heise gauge
(± 2.5 psig accuracy with 1 psig resolution)
or equivalent and valves (see below).

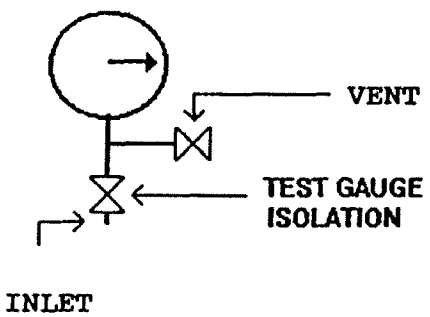

7.3 (Record below) A flow meter capable of measuring 10 - 30 SCFM, ±2% accuracy or equivalent.

Description	M&TE No.	Cal. Due Date	

8.0 **PROCEDURE**

8.1 **Div 2 IA Piping Pressure Test**

NOTE

With 1IA012A handswitches in AUTO, 1IA012A will auto open when 1IA012B is fully closed. Likewise, 1IA013A will Auto open when 1IA013B is fully closed.

1. Div 1 ADS Instrument Air Supply Setup

   1) Place IA SYS DIV 1 IN TEST switch to TEST. _____

      a) Verify 5041-7B, NOT AVAILABLE IA/SA SYSTEMS DIVISION 1 annunciates. _____

      b) Verify IA DIV 1 MOV's IN TEST light energizes. _____

   2) Shut 1IA012B, ADS IA CNMT Inbd Isol Valve. _____

   3) Open/verify open 1IA012A, ADS IA CNMT Outbd Isol Valve. _____

2. Div 2 ADS Instrument Air Supply Setup

   ☞ OK to Initial as C/M if coming from Section 8.2.

   1) Place IA SYS DIV 2 IN TEST switch to TEST. _____

      a) Verify 5041-7G, NOT AVAILABLE IA/SA SYSTEMS DIVISION 2 annunciates. _____

      b) Verify IA DIV 2 MOV's IN TEST light energizes. _____

   2) Shut 1IA013B, ADS IA CNMT Inbd Isol Valve. _____

   3) Open/verify open 1IA013A, ADS IA CNMT Outbd Isol Valve. _____

Initial

8.1 **Div 2 IA Piping Pressure Test** (cont'd)

3. Shut:

   1) 1IA029A, Inst Air Amp A Outlt Isol _____

   2) 1IA029B, Inst Air Amp B Outlt Isol _____

   3) 1IA029C, Inst Air Amp C Outlt Isol _____

   4) 1IA029D, Inst Air Amp D Outlt Isol _____

   5) 1IA029E, Inst Air Amp E Outlt Isol _____

   6) 1IA029F, Inst Air Amp F Outlt Isol _____

   7) 1IA075A,
      Div II ADS Air Bottle Recharge Isol _____

   8) 1IA075B,
      Div I ADS Air Bottle Recharge Isol _____

4. Normal air supply header depressurization:

   1) Verify shut 1IA098, Inst Air Capped Conn. _____

   2) Remove pipe cap at 1IA098. _____

   3) Slowly open 1IA098 to depressurize
      piping downstream of air amplifiers. _____

5. Depressurization of fill header to
   ADS BACKUP AIR BOTTLES:

   1) Verify 1IA133A, Low Point Drain is closed. _____

   2) Remove cap at 1IA133A, Low Point Drain. _____

   3) Slowly throttle open 1IA133A. _____

   4) Slowly open 1IA073, Remote Fill Isolation
      to depressurize the fill line. _____

8.1 **Div 2 IA Piping Pressure Test** (cont'd)

6. Allow ~ 20 minutes for header pressure to stabilize before proceeding. _____

   ☞ Verify test gauge installed/ready per 5.10.

7. (Record) Initial pressure reading:

   1) Record test gauge pressure from test gauge at DIV 2 ADS BACKUP AIR BOTTLE HEADER. _____

      Pressure: _____ psig

   2) Start the stopwatch. _____

   3) Shut test pressure gauge isolation valve. _____

8. After 60 minutes,

   1) Open the test gauge isolation valve. _____

   2) Record the total elapsed time. _____

      _____ time (minutes) (≥ 60 min)

   3) Record the final Test Gauge Pressure. _____

      _____ psig

   4) Determine the pressure drop. _____

      8.1.7.1: _____ psig minus,

      8.1.8.3: _____ psig equals:

      _____ Pressure Drop

   5) Verify Pressure Drop is ≤ 22 psig. _____

8.1 **Div 2 IA Piping Pressure Test** (cont'd)

9. Fill header restoration:

   1. Shut 1IA073, Remote Fill Isolation. **IV** ___/___

   2. Shut 1IA133A, Low Point Drain. **IV** ___/___

   3. Install cap at 1IA133A. **IV** ___/___

10. Test pressure gauge removal:

   1. Shut 1IA-1144A, Isolation Valve To 1PI-IA082A. _____

   2. Vent off the test pressure gauge. _____

   3. Remove test pressure gauge. **IV** ___/___

   4. Install 1PI-IA082A at original location. **IV** ___/___

   5. Slowly open 1IA-1144A, Isolation Valve To 1PI-IA082A. **IV** ___/___

   6. Notify RO/CRS that test pressure gauge has been removed. _____

11. Normal air supply header restoration:

   1) Shut 1IA098, Inst Air Capped Conn. **IV** ___/___

   2) Replace pipe cap downstream of 1IA098. **IV** ___/___

   3) Open:

      a) 1IA029A, Inst Air Amp A Outlt Isol **IV** ___/___

      b) 1IA029B, Inst Air Amp B Outlt Isol **IV** ___/___

      c) 1IA029C, Inst Air Amp C Outlt Isol **IV** ___/___

      d) 1IA029D, Inst Air Amp D Outlt Isol **IV** ___/___

      e) 1IA029E, Inst Air Amp E Outlt Isol **IV** ___/___

      f) 1IA029F, Inst Air Amp F Outlt Isol **IV** ___/___

8.1 **Div 2 IA Piping Pressure Test** (cont'd)

12. Div 1 ADS Instrument Air Supply Restoration

1) Open 1IA012B, ADS IA CNMT Inbd Isol Valve. **IV** ___/___

2) Shut 1IA012A,
ADS IA CNMT Outbd Isol Valve as follows:

Place C/S for 1IA012A to CLOSE, then return it to AUTO. **IV** ___/___

3) Place/verify the IA SYS DIV 1 IN TEST switch to NORMAL. *«LBD-4»* **IV** ___/___

a) Verify NOT AVAILABLE IA/SA SYSTEMS DIVISION 1 annunciator (5041-7B) clears depending on existing plant conditions. _____

b) Verify IA DIV 1 MOVs IN TEST light deenergizes. _____

NOTE

If proceeding directly to Section 8.2, N/A the remaining Section 8.1 steps.

13. Div 2 ADS Instrument Air Supply Restoration

1) Open 1IA013B, ADS IA CNMT Inbd Isol Valve. **IV** ___/___

2) Shut 1IA013A,
ADS IA CNMT Outbd Isol Valve as follows:

Place C/S for 1IA013A to CLOSE, then return it to AUTO. **IV** ___/___

3) Place/verify the IA SYS DIV 2 IN TEST switch to NORMAL. *«LBD-4»* **IV** ___/___

a) Verify NOT AVAILABLE IA/SA SYSTEMS DIVISION 2 annunciator (5041-7G) clears depending on existing plant conditions. _____

b) Verify IA DIV 2 MOVs IN TEST light deenergizes. _____

14. Verify the following alarms are clear:

1) LOSS OF INST AIR ADS RELIEF VLVS (5067-7L) _____

2) HIGH/LOW PRESSURE ADS IA SUPPLY (5040-6F) _____

8.2 Div 2 IA Air Header Chk Vlv, 1IA042A Test

NOTE

With 1IA013A handswitches in AUTO, 1IA013A will auto open when 1IA013B is fully closed.

1. Div 2 ADS Instrument Air Supply Setup

   ☞ OK to Initial as C/M if coming from Section 8.1.

   1) Place IA SYS DIV 2 IN TEST switch to TEST. _____

      a) Verify 5041-7G, NOT AVAILABLE IA/SA SYSTEMS DIVISION 2 annunciates. _____

      b) Verify IA DIV 2 MOV's IN TEST light energizes. _____

   2) Shut/verify shut:

      a) 1IA013A, ADS IA CNMT Outbd Isol Valve. _____

      b) 1IA013B, ADS IA CNMT Inbd Isol Valve. _____

2. Locally, at the DIV 2 ADS BACKUP AIR BOTTLES shut the following valves:

   1) 1IA827A, Comp Gas Bottle 1IA10TA Isol _____
   2) 1IA827B, Comp Gas Bottle 1IA10TB Isol _____
   3) 1IA827C, COMP GAS BOTTLE 1IA10TC Isol _____
   4) 1IA827D, Comp Gas Bottle 1IA10TD Isol _____
   5) 1IA827E, Comp Gas Bottle 1IA10TE Isol _____
   6) 1IA827F, Comp Gas Bottle 1IA10TF Isol _____
   7) 1IA827G, Comp Gas Bottle 1IA10TG Isol _____
   8) 1IA827H, Comp Gas Bottle 1IA10TH Isol _____
   9) 1IA828A, Comp Gas Bottle 1IA10TA Hdr Isol _____
   10) 1IA828B, Comp Gas Bottle 1IA10TB Hdr Isol _____
   11) 1IA828C, Comp Gas Bottle 1IA10TC Hdr Isol _____
   12) 1IA828D, Comp Gas Bottle 1IA10TD Hdr Isol _____
   13) 1IA828E, Comp Gas Bottle 1IA10TE Hdr Isol _____
   14) 1IA828F, Comp Gas Bottle 1IA10TF Hdr Isol _____
   15) 1IA828G, Comp Gas Bottle 1IA10TG Hdr Isol _____
   16) 1IA828H, Comp Gas Bottle 1IA10TH Hdr Isol _____

Initial

8.2 **Div 2 IA Air Header Chk Vlv, 1IA042A Test** (cont'd)

3. Verify 1IA097A, Div 2 ADS IA Drn is shut, then remove the pipe cap. _____

NOTE

High/Low Pressure ADS IA Supply Div 1 or 2 annunciator will energize when header pressure decreases to 140 psig (5040-6F).

4. Slowly open 1IA097A to depressurize the ADS Supply Header. _____

5. Flow meter installation:
   1) Notify RO/CRS that an air flow meter is to be connected to 1IA097A, Div 2 ADS IA Drn. _____
   2) Shut 1IA097A. _____
   3) Connect the Flow Meter downstream of drain valve 1IA097A. **CV** ____/____

6. Open 1IA013B, ADS IA CNMT Inbd Isol Valve. _____

7. (Record) VERY SLOWLY Throttle open 1IA097A, Div 2 ADS IA Drn to obtain ≥ 30 SCFM. _____

   Flow obtained: _____ SCFM

8. Test instrument change:
   1) Shut 1IA097A, Div 2 ADS IA Drn. _____
   2) Remove Flow Meter. **IV** ____/____
   3) Install test pressure gauge. **CV** ____/____
   4) Notify RO/CRS that the calibrated flow meter is removed and test gauge is installed at 1IA097A, Div 2 ADS IA Drn. _____

9. Open test gauge isolation valve. _____

10. Slowly open 1IA097A, and verify indicated pressure > 100 psig. _____

8.2 **Div 2 IA Air Header Chk Vlv, 1IA042A Test** (cont'd)

11. Shut 1IA013B, ADS IA CNMT Inbd Isol Valve. _____

12. Open 1IA013A, ADS IA CNMT Outbd Isol Valve _____

13. Remove the cap and open 1IA096D to depressurize piping UPSTREAM of 1IA042A. _____

14. Verify IA piping upstream of 1IA042A depressurized. _____

15. Allow pressure to stabilize at test gauge installed at 1IA097A. _____

16. (Record) Initial pressure reading:

    1) Record test gauge pressure at 1IA097A. _____

       Pressure: _____ psig

    2) Start the stopwatch. _____

    3) Shut test pressure gauge isolation valve. _____

17. After 10 minutes,

    1) Open the test gauge isolation valve. _____

    2) Record the total elapsed time. _____

       _____ time (minutes) (≥ 10 min)

    3) Record the final Test Gauge Pressure. _____

       _____ psig

    4) Determine the pressure drop. _____

       8.2.16.1: _____ psig minus,

       8.2.17.3: _____ psig equals:

       _____ Pressure Drop

    5) Verify Pressure Drop is ≤ 2 psig. _____

8.2 **Div 2 IA Air Header Chk Vlv, 1IA042A Test** (cont'd)

18. Test gauge removal:
    1) Shut 1IA097A, Div 2 ADS IA Drn. **IV** ___/___
    2) Remove the test gauge. **IV** ___/___
    3) Replace the pipe cap. **IV** ___/___
    4) Notify RO/CRS that the test gauge is removed from 1IA097A, Div 2 ADS IA Drn. _____

19. Shut and cap 1IA096D. **IV** ___/___

20. Open the following valves:
    1) 1IA827A, Comp Gas Bottle 1IA10TA Isol **IV** ___/___
    2) 1IA827B, Comp Gas Bottle 1IA10TB Isol **IV** ___/___
    3) 1IA827C, COMP GAS BOTTLE 1IA10TC Isol **IV** ___/___
    4) 1IA827D, Comp Gas Bottle 1IA10TD Isol **IV** ___/___
    5) 1IA827E, Comp Gas Bottle 1IA10TE Isol **IV** ___/___
    6) 1IA827F, Comp Gas Bottle 1IA10TF Isol **IV** ___/___
    7) 1IA827G, Comp Gas Bottle 1IA10TG Isol **IV** ___/___
    8) 1IA827H, Comp Gas Bottle 1IA10TH Isol **IV** ___/___
    9) 1IA828A, Comp Gas Bottle 1IA10TA Hdr Isol **IV** ___/___
    10) 1IA828B, Comp Gas Bottle 1IA10TB Hdr Isol **IV** ___/___
    11) 1IA828C, Comp Gas Bottle 1IA10TC Hdr Isol **IV** ___/___
    12) 1IA828D, Comp Gas Bottle 1IA10TD Hdr Isol **IV** ___/___
    13) 1IA828E, Comp Gas Bottle 1IA10TE Hdr Isol **IV** ___/___
    14) 1IA828F, Comp Gas Bottle 1IA10TF Hdr Isol **IV** ___/___
    15) 1IA828G, Comp Gas Bottle 1IA10TG Hdr Isol **IV** ___/___
    16) 1IA828H, Comp Gas Bottle 1IA10TH Hdr Isol **IV** ___/___

8.2 **Div 2 IA Air Header Chk Vlv, 1IA042A Test** (cont'd)

NOTE

If proceeding directly to Section 8.1, N/A the remaining Section 8.2 steps.

21. Div 2 ADS Instrument Air Supply Restoration

    1) Open 1IA013B, ADS IA CNMT Inbd Isol Valve. **IV** ___/___

    2) Shut 1IA013A,
       ADS IA CNMT Outbd Isol Valve as follows:

       Place C/S for 1IA013A to CLOSE, then
       return it to AUTO. **IV** ___/___

    3) Place/verify the IA SYS DIV 2 IN TEST
       switch to NORMAL. *«LBD-4»* **IV** ___/___

       a) Verify NOT AVAILABLE IA/SA SYSTEMS
          DIVISION 2 annunciator (5041-7G) clears
          depending on existing plant conditions. _____

       b) Verify IA DIV 2 MOVs IN TEST light
          deenergizes. _____

22. Verify the following alarms are clear:

    1) LOSS OF INST AIR ADS RELIEF VLVS (5067-7L)
       _____

    2) HIGH/LOW PRESSURE ADS IA SUPPLY (5040-6F) _____

8.3 **Notification**

SMngt notified of test completion.

_____/_____ _____
Date Time

SUPPLEMENTAL REVIEW SHEET

Corrective Action Taken

Operability Requirements:

ITS LCOs: 3.4.4 3.5.1 3.6.1.6

ORM ORs: 2.5.2

ODCM ORs: None

As applicable:

Initiated Condition Report No. _____

Initiated Work Document No. _____

Comments/Deficiencies

_____

Review and Approval

Cognizant Plant Engineer: _____
(ISI Pump and Valve) (Signature) (Date)

Surveillance Coordinator: _____
(Signature) (Date)

ATTACHMENT 7

CPS 9061.11C005
"Non-Div. SRV/IA Tests"

NON-DIV SRV/IA TESTS [For Non-Div SRV 1B21-F0_____]

SCOPE OF REVISION:

- Total rewrite - rev. marks not used:

  Consolidation of C009, C010, C011, C012 procedure sections relating to Non-Div SRV Actuations into a stand alone checklist, including all data collection.
  - ITS amendment (U-603495) eliminates requirement to open each SRV in ITS SR 3.4.4.3, 3.5.1.7, 3.6.1.6.1. Verification of actuator stroking is the new ITS METHOD 2 criteria. Slow closure rig in no longer required.
  - Updated applicable items to reflect the ITS change and the ISI relief request #2204 for eliminating SRV stroke time/position verifications.
  - All previous LSF overlaps are still satisfied.

  This reformation/restructuring supports the rewrite of the Non-Div IA Piping Test sections into a stand alone C006.

❶ Specific rev 5a [Sheffield]: - CCF [Rohrscheib]:
Eliminated Full Flow To Open Test.

CONTINUOUS USE

ORIGINATOR: *Thomas J. Landin* **CLASS CODE:** *SNNI1*

SQR: *Dale Shelton* **APPROVAL DATE:** *APR 01 2002*

CURRENT CHANGES TO GENERAL REVISION

	Change #	Date	List of Affected Pages
❶	5a	11/03/05	1, 2, 3, 6, 13, 14
❷			
❸			
❹			
❺			

Non-Div SRV being tested: _____

5.0 PREREQUISITES

5.1 Pre-Planning Information

1. This is a stand alone performance checklist, therefore the base procedure is not required to perform the procedure actions.

   This checklist is written for performance of one SRV. Use a separate checklist for each SRV being tested.

   Portions of the checklist which are not being used shall be N/A'd prior to starting work.

   All ISI data is recorded and retained in the procedure.

2. Multiple SRV's can be tested concurrently.

   The procedure is structured to flow from 8.1 through 8.2 with minimal condition changes, however the sections can be performed in any order.

   The number of available gauges and personnel will be the only limitation to the number of SRV's which can be tested at in any one sequence.

3. Sections 8.1 and 8.2 require the SRV Actuator to be disconnected.

   Prerequisite 5.11 and Restoration 8.4.2 steps provide the documented Mech Maint configuration control for the SRV Actuator.

   Appropriate Clearances and Work Requests will need to be generated as part of the planning package.

Non-Div SRV being tested: _____

5.0 **PREREQUISITES** (cont'd)

5.1 **Pre-Planning Information** (cont'd)

4. Section 8.1 tests SRV Actuators Using both the "A" and "B" Solenoids in the MCR.
   - Tests Non-Div SRVs - 1B21-F041A, F041G, F041L, F047B, F047D, F047F, F051B
   - Required each refueling cycle
   - Satisfies ITS SR's 3.4.4.2, 3.4.4.3, 3.6.1.6.1 requirements

   Partially satisfies LSF overlaps in ITS SR's 3.3.6.5.4, 3.6.1.6.2

   Verifying each SRV valve actuator strokes when manually actuated (Method 2) using the "A" and "B" solenoids.

5. Section 8.2 tests the Non-Div SRV IA Check Valves.
   - Tests Non-Div SRVs Check Valves - 1B21-F036A, F036F, F036G, F036J, F036L, F036M, F036N
   - Required each refueling cycle
   - Satisfies ISI Pressure Drop Test (SRV Open/Closed)
   - Satisfies 3 year Pressure Test of SRV IA Piping
   - Satisfies SSER 5: Leak testing ADS air supply check valves and pneumatic actuators
   - Temp pressure gauge required

❶

Non-Div SRV being tested: _____

5.0 **PREREQUISITES** (cont'd)

5.2 Document on Title Page and in all double underlined blanks the Non-Div SRV EIN being tested.

N/A any sections/steps not being used for this SRV.

SRV: _____ _____

5.3 (Initial) In conjunction with the SMngt, review the following impact statements to determine required plant status to perform this test:

OPERABILITY IMPACTED:

ITS LCO 3.4.4, 3.6.1.6

SYSTEMS IMPACTED:

AFFECTED ANNUNCIATORS AND COMPUTER POINTS: N/A

RPS TRIP: N/A

CRVICS ISOLATION: N/A

REQUIRED OPERABLE CHANNELS: N/A

COINCIDENT CHANNELS THAT PREVENT ACTUATION: N/A

PLANT/SYSTEM CONDITIONS REQUIRED TO CONDUCT THIS TEST:

- MODE 4 or 5
- SRVs will not be available for alternate SDC.
- When 1IA099, Inst Air Isol To MSIVs & SRVs is shut in addition to SRVs and MSIVs, following components will not have IA available:

  0RA029, Drywell Breathing Air Hdr Inbd Isol
  1VQ001B, DW PRG Supply INBD Isol Valve

Impact Matrix discussed. _____ / _____
SMngt Performer

Initial

Non-Div SRV being tested: _____

5.0 **PREREQUISITES** (cont'd)

5.4 Verify Plant Air System is in Operation as per CPS 3214.01, Plant Air (IA & SA), or CPS 3214.03, Temporary Service Air. _____

5.5 Verify Reactor vessel is in MODE 4 or 5. _____

5.6 Verify the drywell has been evaluated to be accessible. _____

5.7 Generate a CPS 1512.01F007, Post Calibration Check Sheet, for each instrument listed in 7.0. _____

5.8 Check the calibration due date of test equipment to be used, to ensure calibration is up-to-date. _____

5.9 Verify communications established as necessary. _____

5.10 Obtain permission from SMngt to perform this procedure.

_____ / _____ _____

Date Time SMngt

Non-Div SRV being tested: _____

5.0 **PREREQUISITES** (cont'd)

5.11 Mech Maint uncouple the SRV actuator as follows.

Uncoupling SRV _____ Actuator (Refer to Appendix A)

1. Verify working on **SRV** _____. _____

2. Straighten tab washer (BA) on stem. _____

3. Remove nut (AH) from stem. _____

4. Remove tab washer (BA) from stem. _____

5. (Record) Measure from top of stem (V) to top of bushing (AJ). **CV**___/___

   Measurement to be 3 decimal places.

   Measurement: _____

6. Ensure the threads are clean and undamaged, THEN carefully (by hand only), unscrew roller bearing assembly (AJ) until there is at least a 1.75 inch gap between the roller bearings (AP) and the hardened blocks (BC). _____

7. Notify MCR that **SRV** _____ actuator has been uncoupled. _____

Non-Div SRV being tested: _____

7.0 **MATERIALS/TEST EQUIPMENT**

7.1 (Record below) Stopwatch
[Range: 0 - 40 min, Accuracy: ± 0.10 sec/40 min,
Minor Divisions: N/A; or equivalent stopwatch.]

7.2 (Record below) Pressure gauge

0 - 200 psig test gauge
(± 0.25% accuracy with 1 psig increments)
or equivalent and valves (see below).

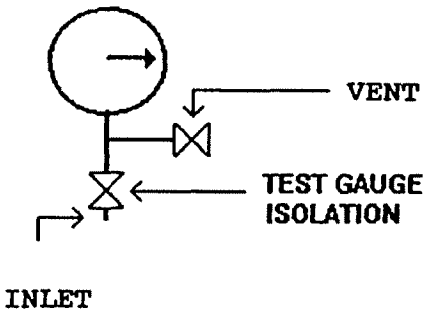

7.3 (Record below) A flow meter capable of measuring
10 - 30 SCFM, ±2% accuracy or equivalent.

Description	M&TE No.	Cal. Due Date	

Non-Div SRV being tested: _____

8.0 **PROCEDURE**

8.1 **SRV Actuator Test**

8.1.1 Using MCR SRV "A" Solenoid *«LBD-1, LBD-2»*

☞ This sub-section may be N/A'd if Section 8.2 will be performed, as it utilizes the MCR SRV "A" Solenoid, and therefore fully satisfies the surveillance requirements.

1. Verify operator stationed at **SRV** _____ and in communication with the MCR. _____

2. At 1H13-P601, place **SRV** _____ control switch to OPEN. _____

3. (Drywell) Verify SRV actuator stroked open. _____

4. At 1H13-P601, place **SRV** _____ control switch to AUTO. **IV** ___/___

5. (Drywell) Verify SRV actuator stroked shut. _____

8.1.2 Using MCR SRV "B" Solenoid *«LBD-1, LBD-2»*

1. Verify operator stationed at **SRV** _____ and in communication with the MCR. _____

2. At 1H13-P642, place **SRV** _____ control switch to OPEN. _____

3. (Drywell) Verify SRV actuator stroked open. _____

4. At 1H13-P642, place **SRV** _____ control switch to AUTO. **IV** ___/___

5. (Drywell) Verify SRV actuator stroked shut. _____

Initial

Non-Div SRV being tested: _____

8.2 **SRV IA Check Valves/Air Actuator Test**

1. Notify the RO/CRS that a test gauge and valves are to be installed on the SRV's 1B21-F081 instrument air drain. _____

2. For applicable SRV being tested (N/A others):

   Verify valve is shut, remove pipe cap and install test gauge with isolation valve.

   1) Non-Div: SRV 41A
      1B21-F081A, SRV 41A Inst Air Drain. **CV** ___/___
   2) Non-Div: SRV 41G
      1B21-F081F, SRV 41G Inst Air Drain. **CV** ___/___
   3) Non-Div: SRV 41L
      1B21-F081G, SRV 41L Inst Air Drain. **CV** ___/___
   4) Non-Div: SRV 47B
      1B21-F081J, SRV 47B Inst Air Drain. **CV** ___/___
   5) Non-Div: SRV 47D
      1B21-F081L, SRV 47D Inst Air Drain. **CV** ___/___
   6) Non-Div: SRV 47F
      1B21-F081M, SRV 47F Inst Air Drain. **CV** ___/___
   7) Non-Div: SRV 51B
      1B21-F081N, SRV 51B Inst Air Drain. **CV** ___/___

3. Verify shut the test gauge isolation valve. _____

4. Slowly open the applicable SRV's 1B21-F081 Inst Air Drain valve. _____

5. Open the test gauge isolation valve. _____

6. Verify that there are no noticeable air leaks downstream of the check valves. _____

Non-Div SRV being tested: _____

8.2 **SRV IA Check Valves/Air Actuator Test** (cont'd)

7. Depressurize the Non-Div IA header:

☞ This step common to other Non-Div valves being tested as a package. OK to initial for C/M.

1) Shut 1IA099, Inst Air Isol To MSIV's & SRVs. _____

2) Verify shut 1IA942K, IA Capped Conn (Vent). _____

3) Remove pipe cap downstream of 1IA942K. _____

4) Slowly open 1IA942K. _____

8. Actuating the SRV (using 'A' Solenoid) *«LBD-1, LBD-2»*

1) Verify operator stationed at the SRV and in communication with the MCR. _____

2) At 1H13-P601, place **SRV** _____ control switch to OPEN. _____

3) (Drywell) Verify SRV actuator stroked open. _____
«LBD-1, LBD-2»

Non-Div SRV being tested: _____

8.2 **SRV IA Check Valves/Air Actuator Test** (cont'd)

9. Pressure Drop Test (SRV OPEN)

1) Allow pressure to stabilize on the test pressure gauge, then record the Test Gauge Pressure. _____

_____ psig

2) Start the stop watch. _____

3) Shut the test gauge isolation valve. _____

4) After 26 minutes,

a) Open the test gauge isolation valve. _____

b) Record the total elapsed time. _____

_____ minutes (≥ 26 min)

5) Record the final Test Gauge Pressure. _____

_____ psig

6) Determine the pressure drop. _____

8.2.9.1: _____ psig minus,
8.2.9.5: _____ psig equals:

_____ Pressure Drop

7) Verify Pressure Drop is ≤ 1.5 psig. _____

10. At 1H13-P601, place **SRV** _____ control switch to AUTO. **IV** ___/___

11. (Drywell) Verify SRV actuator stroked shut. _____
«LBD-1, LBD-2»

Initial

Non-Div SRV being tested: _____

8.2 **SRV IA Check Valves/Air Actuator Test** (cont'd)

12. Pressure Drop Test (SRV CLOSED)

1) Allow pressure to stabilize on the test pressure gauge, then record the Test Gauge Pressure. _____

_____ psig

2) Start the stop watch. _____

3) Shut the test gauge isolation valve. _____

4) After 26 minutes,

a) Open the test gauge isolation valve. _____

b) Record the total elapsed time. _____

_____ minutes (≥ 26 min)

5) Record the final Test Gauge Pressure. _____

_____ psig

6) Determine the pressure drop. _____

8.2.12.1: _____ psig minus,
8.2.12.5: _____ psig equals:

_____ Pressure Drop

7) Verify Pressure Drop is ≤ 1.5 psig. _____

13. Shut and cap 1IA942K, IA Capped Conn (Vent). **IV** ___ / ___

☞ This step common to other Div 2 valves being tested as a package. OK to initial for C/M.

14. Slowly open 1IA099, Inst Air Isol To MSIV's & SRVs. **IV** ___ / ___

☞ This step common to other Div 2 valves being tested as a package. OK to initial for C/M.

Non-Div SRV being tested: _____

8.2 **SRV IA Check Valves/Air Actuator Test** (cont'd)

15. Pressure Test Gauge Removal

For applicable SRV (N/A others):

Shut/verify shut the 1B21-F081 Inst Air Drain,
shut the test gauge isolation valve,
vent off the test gauge,
remove the test gauge, and
THEN Re-install the pipe cap.

1) Non-Div: SRV 41A

1B21-F081A, SRV 41A Inst Air Drain. **IV** ___/___

2) Non-Div: SRV 41G

1B21-F081F, SRV 41G Inst Air Drain. **IV** ___/___

3) Non-Div: SRV 41L

1B21-F081G, SRV 41L Inst Air Drain. **IV** ___/___

4) Non-Div: SRV 47B

1B21-F081J, SRV 47B Inst Air Drain. **IV** ___/___

5) Non-Div: SRV 47D

1B21-F081L, SRV 47D Inst Air Drain. **IV** ___/___

6) Non-Div: SRV 47F

1B21-F081M, SRV 47F Inst Air Drain. **IV** ___/___

7) Non-Div: SRV 51B

1B21-F081N, SRV 51B Inst Air Drain. **IV** ___/___

16. If section 8.1 and 8.2 are complete,
then restore SRV actuator connection
per 8.4.2.

Initial

Non-Div SRV being tested: _____

8.3 Deleted

8.4 **RESTORATION**

8.4.1 Deleted

8.4.2 Mech Maint recouple the SRV actuator as follows.

Re-coupling SRV Actuator (Refer to Appendix A)

1. Carefully (by hand only), screw roller bearing assembly (AJ) down the stem until measurement from top of stem (V) to top of bushing (AJ) is the same as measurement taken in step 5.11.5. **CV** ___/___

   ☞ Roller bearing assembly may also be set using the zero clearance method IAW CPS 8216.03, Section 8.2.2.3 or 8.4.2.5 as applicable.

2. Install tab washer (BA) and locknut (AH). **IV** ___/___

3. Tighten locknut (AH) while ensuring roller bearing assembly (AJ) does not move. **CV** ___/___

4. Bend tab washer (BA) into place on locknut (AH). **IV** ___/___

5. Notify MCR that **SRV** _____ actuator has been recoupled. _____

8.5 **NOTIFICATION**

Notify SMngt of test completion on **SRV** _____.

_____/_____ _____
Date Time

APPENDIX A

SRV ZERO CLEARANCE

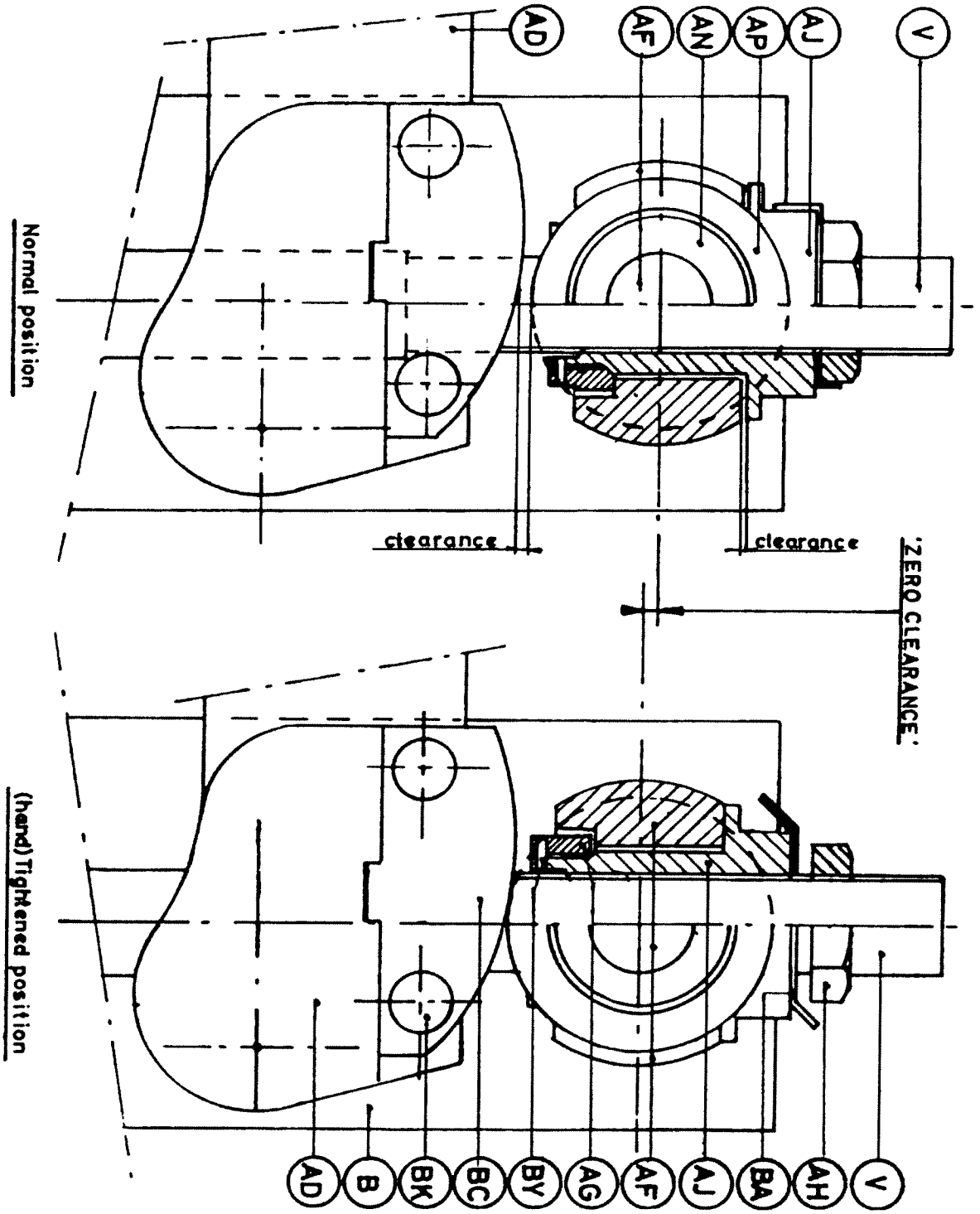

SUPPLEMENTAL REVIEW SHEET

Corrective Action Taken

Operability Requirements:

ITS LCOs: 3.3.5.1 3.3.6.5 3.4.4 3.5.1 3.6.1.6

ORM ORs: None

ODCM ORs: None

As applicable:

Initiated Issue Report No. _____

Comments/Deficiencies

_____

_____

_____

_____

_____

_____

_____

_____

_____

_____

_____

_____

_____

_____

Review and Approval

Cognizant Plant Engineer: _____
(ISI Pump and Valve) (Signature) (Date)

Shift Management: _____
(Signature) (Date)

ATTACHMENT 8

CPS 9061.11C021
"FW Testable Check Valves IA Check Valves & Piping Test"

FW TESTABLE CHECK VALVES IA CHECK VALVES & PIPING TEST

SCOPE OF REVISION:

- CA 528352
  Re-institute testing of Feedwater check valves previously deleted.

CONTINUOUS USE

ORIGINATOR: *HD Jeans* **CLASS CODE:** *SNNI1*

ITR: *Ken Sheffield* **APPROVAL DATE:** *10/25/07*

CURRENT CHANGES TO GENERAL REVISION

	Change #	Date	List of Affected Pages
❶			
❷			
❸			
❹			
❺			

INITIAL

5.1 Impact Matrix Discussed _____ / _____
SMngt Test Performer

5.2 Plant Air System in operation. _____

5.3 N/A

5.4 N/A

5.5 Feedwater System Shutdown. _____

5.6 N/A

5.7 CPS 1512.01F007, Post Cal Check Sheet, generated. _____

5.8 Test equipment calibration due date checked. _____

5.9 Communications established as necessary. _____

5.10 Procedure performance permission.

_____ / _____ _____
Date Time SMngt

8.16 IA Chk Vlvs to the FW Testable Check Vlvs, 1B21-F433A(B), & Pipe Press Tests

NOTE

This section tests the air supply check valves individually or both at the same time. If conducting test on 1B210F433A only, perform steps in column A. If conducting test on 1B210F433B only, perform steps in column B. N/A the steps for the column not being tested as applicable.

8.16.1 IA Pipe Press Tests & Chk Vlv Close Test	A	B
1. Notify RO/CRS which FW check valve is to be tested.		
1) 1B21-F032A, 'A' FW CHECK VALVE	_____	N/A
2) 1B21-F032B, 'B' FW CHECK VALVE	N/A	_____
2. Notify the RO/CRS that a test gauge is to be installed on:		
1) 1B21F492A, AIR ACCUMULATOR A DRAIN VALVE	_____	N/A
2) 1B21F492B, AIR ACCUMULATOR B DRAIN VALVE	N/A	_____

INITIAL

8.16 (cont'd)

	A	B
3. Verify the valve is shut, remove the pipe cap, DOUBLE VERIFY and connect the test gauge.		
1) 1B21F492A, closed.	_____	N/A
Pipe cap removed.	_____	N/A
Test pressure gauge installed.	CV ___/___	N/A
Test pressure gauge isolation valve opened.	CV ___/___	N/A
2) 1B21F492B, closed.	N/A	_____
Pipe cap removed.	N/A	_____
Test pressure gauge installed.	N/A	CV ___/___
Test pressure gauge isolation valve opened.	N/A	CV ___/___
4. Slowly open the following valves:		
1) 1B21F492A, AIR ACCUMULATOR A DRAIN VALVE	_____	N/A
2) 1B21F492B, AIR ACCUMULATOR B DRAIN VALVE	N/A	_____
5. Close the FW TESTABLE CHK VLV IA SUPPLY VALVE.		
1) 1IA881A, INST AIR ISOL TO 1B21-F032A	_____	N/A
2) 1IA1039, INST AIR ISOL TO 1B21-F032B	N/A	_____
6. Remove the Pipe Cap and Open the INST AIR DRAIN VALVE.		
1) 1IA127A, FW A INST AIR TEST CONN	_____	N/A
2) 1IA127B, FW B INST AIR TEST CONN	N/A	_____

8.16 (cont'd)

	A	B
7. (Record) Record the gauge EIN and pressure from the test gauge.		
8. Test period start:		
1) Start the stopwatch.		
2) Close test gauge isolation valve at:		
- 1B21-F492A	_____	N/A
- 1B21-F492B	N/A	_____
9. (Record) After the time required on CPS 9061.11D001 has elapsed:		
1) Open test gauge isolation valve at:		
- 1B21F492A	_____	N/A
- 1B21F492B	N/A	_____
2) Record final pressure from test gauge.		
3) Record elapsed time.		
10. (Record) Calculate the pressure drop and record the solution using the formula below:		
Pressure (8.16.1.7) - Pressure (8.16.1.9)		

8.16.2 Close the drain valve and disconnect the test gauge and install pipe cap at:

1. 1B21F492A closed	IV ___/___	N/A
Test gauge removed.	IV ___/___	N/A
Pipe cap installed.	IV ___/___	N/A
2. 1B21F492B	N/A	IV ___/___
Test gauge removed.	N/A	IV ___/___
Pipe cap installed.	N/A	IV ___/___

INITIAL

		A	B
8.16.3	Notify the RO/CRS that the test gauge is removed from:		
	1. 1B21F492A	_____	N/A
	2. 1B21F492B	N/A	_____
8.16.4	Close the INST AIR DRAIN VALVE and reinstall the Pipe Cap:		
	1. 1IA127A, FW A INST AIR TEST CONN	**IV** ___/___	N/A
	Pipe cap installed	**IV** ___/___	N/A
	2. 1IA127B, FW B INST AIR TEST CONN	N/A	**IV** ___/___
	Pipe cap installed	N/A	**IV** ___/___
8.16.5	Open the FW TESTABLE CHK VLV IA SUPPLY VALVE.		
	1. 1IA881A, INST AIR ISOL TO 1B21-F032A	**IV** ___/___	N/A
	2. 1IA1039, INST AIR ISOL TO 1B21-F032B	N/A	**IV** ___/___
8.18	SMngt notified of test completion.		

_____ / _____ _____
Date Time

SUPPLEMENTAL REVIEW SHEET

CORRECTIVE ACTION TAKEN

9.1 ACCEPTANCE CRITERIA

ORM ORs: 2.5.2

As applicable:
Initiated Condition Report _____
(yes/no)

Initiated Maintenance Request (MR) No. _____

9.2 ACCEPTANCE CRITERIA

As applicable:
Initiated Condition Report _____
(yes/no)

Initiated Maintenance Request (MR) No. _____

COMMENTS/DEFICIENCIES

_____

_____

_____

_____

_____

_____

_____

REVIEW AND APPROVAL

Cognizant Plant Engineer: _____
(ISI Pump and Valve) (Signature) (Date)

Cognizant Plant Engineer: _____
(ISI Pressure Testing) (Signature) (Date)

Shift Management: _____
(Signature) (Date)

ATTACHMENT 9

CPS 9061.11D001
"Instrument Air Check Valve Operability and Piping Pressure Tests"

INSTRUMENT AIR CHECK VALVE OPERABILITY AND PIPING PRESSURE TESTS

SCOPE OF REVISION:

- Consolidation of C001 - C012 procedure sections relating to SRV Actuations and IA Tests into a stand alone checklist C001 - C005. All test equipment and data collection is now recorded in the stand-alone checklists, and has been removed for this data sheet.

❶ Specific rev 34a [Sheffield]: - CCF [Rohrscheib]:
Deleted sections 8.12, 8.15 (Open tests of MSIV IA Accumulator Supply Check valves) and 8.16 (duplicate steps performed per 9861.05D013 and 9861.05D014).

❷ Specific rev 34b [Jeans]: - CA 528352
Re-institute testing of Feedwater checkvalves (8.16) previously deleted.

CONTINUOUS USE

ORIGINATOR: *Thomas J. Landin* **CLASS CODE:** *SNNI1*

SQR: *Dale Shelton* **APPROVAL DATE:** *APR 01 2002*

CURRENT CHANGES TO GENERAL REVISION

	Change #	Date	List of Affected Pages
❶	34a	11/03/05	1, 2, 3
❷	34b	10/25/07	1,3
❸			
❹			
❺			

INSTRUMENT AIR CHECK VALVE OPERABILITY AND PIPING PRESSURE TESTS

NOTE

All data shall be recorded to the nearest 1/2 lb.

7.0

EQUIPMENT	EIN	Cal. Due Date	EQUIPMENT	EIN	Cal. Due Date
Stopwatch	_____	_____	Press Gauge	_____	_____
Stopwatch	_____	_____	Press Gauge	_____	_____
Press Gauge	_____	_____	Press Gauge	_____	_____
Press Gauge	_____	_____	Press Gauge	_____	_____
Press Gauge	_____	_____	Press Gauge	_____	_____
Press Gauge	_____	_____	Flow Meter	_____	_____
Press Gauge	_____	_____	Flow Meter	_____	_____

8.10 - 8.11 Inbd MSIV IA Chk Vlvs, 1B21-F024A(B,C,D) & Pipe Press Tests

PRESS TEST OF INBD MSIV IA PIPING

STEP NUMBER:	8.10.7		8.10.9			8.10.10	
				TIME (MINUTES)		PRESS DROP (PSIG)	
MSIV NO.	GAUGE EIN	INITIAL PRESS (PSIG)	FINAL PRESS (PSIG)	REQUIRED	ACTUAL	ACTUAL	ALLOWABLE
1B21-F022A				≥63			≤1.5
1B21-F022B				≥63			≤1.5
1B21-F022C				≥63			≤1.5
1B21-F022D				≥63			≤1.5

INBD MSIV IA CHK VLV CLOSE TEST

STEP NUMBER:	8.11.8		8.11.10			8.11.11	
				TIME (MINUTES)		PRESS DROP (PSIG)	
CHK VLV NO. (MSIV NO.)	GAUGE EIN	INITIAL PRESS (PSIG)	FINAL PRESS (PSIG)	REQUIRED	ACTUAL	ACTUAL	ALLOWABLE
1B21-F024A (1B21-F022A)				≥63			≤1.5
1B21-F024B (1B21-F022B)				≥63			≤1.5
1B21-F024C (1B21-F022C)				≥63			≤1.5
1B21-F024D (1B21-F022D)				≥63			≤1.5

❶
8.13 - 8.14 Outbd MSIV IA Chk Vlvs & Pipe Press Tests

PRESSURE TEST OF OUTBD MSIV IA PIPING

STEP NUMBER:	8.13.9		8.13.11			8.13.12	
				TIME (MINUTES)		PRESS DROP (PSIG)	
MSIV NO.	GAUGE EIN	INITIAL PRESS (PSIG)	FINAL PRESS (PSIG)	REQUIRED	ACTUAL	ACTUAL	ALLOWABLE
1B21-F028A				≥63			≤1.5
1B21-F028B				≥63			≤1.5
1B21-F028C				≥63			≤1.5
1B21-F028D				≥63			≤1.5

OUTBD MSIV IA CHK VLV CLOSE TEST

STEP NUMBER:	8.14.10		8.14.12			8.14.13	
				TIME (MINUTES)		PRESS DROP (PSIG)	
CHK VLV NO. (MSIV NO.)	GAUGE EIN	INITIAL PRESS (PSIG)	FINAL PRESS (PSIG)	REQUIRED	ACTUAL	ACTUAL	ALLOWABLE
1B21-F029A (1B21-F028A)				≥63			≤1.5
1B21-F029B (1B21-F028B)				≥63			≤1.5
1B21-F029C (1B21-F028C)				≥63			≤1.5
1B21-F029D (1B21-F028D)				≥63			≤1.5

❶❷
8.16 IA Chk Vlvs to the FW Testable Check Vlvs, 1B21-F433A(B) & Pipe Press Tests

STEP NUMBER:	8.16.1.7		8.16.1.9			8.16.1.10	
				TIME (MINUTES)		PRESS DROP (PSIG)	
CHK VLV NO. (VALVE NO.)	GAUGE EIN	INITIAL PRESS (PSIG)	FINAL PRESS (PSIG)	REQUIRED	ACTUAL	ACTUAL	ALLOWABLE
1B21-F433A (1B21-F032A)				≥26			≤1.5
1B21-F433B (1B21-F032B)				≥26			≤1.5

COMMENTS/DEFICIENCIES

REVIEW AND APPROVAL

Cognizant Plant Engineer: _____
(ISI Pump and Valve) (Signature) (Date)

Shift Management: _____
(Signature) (Date)