OFFSITE DOSE CALCULATION MANUAL

PART I RECS

PART II ODCM

LaSalle Station
Units 1 and 2

Revision 0

ODCM TABLE OF CONTENTS

PART I - RADIOLOGICAL EFFLUENT CONTROLS (RECS)

PAGE

1.0 USE AND APPLICATION I-1.1-1

1.1 DEFINITIONS I-1.1-1

1.2 LOGICAL CONNECTORS I-1.2-1

1.3 COMPLETION TIMES I-1.3-1

1.4 FREQUENCY I-1.4-1

1.5 REC & RSR IMPLEMENTATION I-1.5-1

2.0-11.0 NOT USED

12.0 ODCM RADIOLOGICAL EFFLUENT CONTROL (REC) APPLICABILITY I-12.0-1

12.0 ODCM RADIOLOGICAL EFFLUENT SURVEILLANCE REQUIREMENT (RSR) APPLICABILITY I-12.0-3

12.1 NOT USED

12.2 INSTRUMENTATION I-12.2-1

12.2.1 RADIOACTIVE LIQUID EFFLUENT MONITORING INSTRUMENTATION I-12.2.1-1

12.2.2 RADIOACTIVE GASEOUS EFFLUENT MONITORING INSTRUMENTATION . I-12.2.2-1

12.3 LIQUID EFFLUENTS I-12.3.1-1

12.3.1 Liquid Effluent Concentration I-12.3.1-1
12.3.2 Dose from Liquid Effluents I-12.3.2-1
12.3.3 Liquid Radwaste Treatment System I-12.3.3-1

ODCM TABLE OF CONTENTS

PART I - RADIOLOGICAL EFFLUENT CONTROLS (RECS)

PAGE

12.4 RADIOACTIVE GASEOUS EFFLUENTS I-12.4.1-1

12.4.1 Gaseous Effluent Dose Rates I-12.4.1-1
12.4.2 Dose from Noble Gases I-12.4.2-1
12.4.3 Dose from Iodine-131, Iodine-133, Tritium and Radioactive Materials in Particulate Form I-12.4.3-1
12.4.4 Gaseous Radwaste Treatment System I-12.4.4-1
12.4.5 Ventilation Exhaust Treatment System I-12.4.5-1
12.4.6 Mark II Containment I-12.4.6-1
12.4.7 Total Dose I-12.4.7-1
12.4.8 Main Condenser I-12.4.8-1
12.4.9 Dose Limits For Members Of The Public I-12.4.9-1

12.5 RADIOLOGICAL ENVIRONMENTAL MONITORING PROGRAM I-12.5.1-1

12.5.1 RADIOLOGICAL ENVIRONMENTAL MONITORING PROGRAM (REMP) I-12.5.1-1

12.5.2 LAND USE CENSUS I-12.5.2-1

12.5.3 INTERLABORATORY COMPARISON PROGRAM I-12.5.3-1

12.5.4 METEOROLOGICAL MONITORING PROGRAM I-12.5.4-1

12.6 REPORTING REQUIREMENTS I-12.6.1-1

12.6.1 Annual Radiological Environmental Operating Report I-12.6.2-1
12.6.2 Annual Radioactive Effluent Release Report I-12.6.3-1
12.6.3 Off-site Dose Calculation Manual (ODCM) I-12.6.4-1
12.6.4 Major Changes to Radioactive Waste Treatment Systems (Liquid and Gaseous) I-12.6.4.1

ODCM TABLE OF CONTENTS

PART I - RADIOLOGICAL EFFLUENT CONTROLS (RECS)

B BASES I-B-1

B.12.0 REC & RSR APPLICABILITY BASES I-B.12.0.1

B.12.1 NOT USED

B.12.2 INSTRUMENTATION I-B.12.2.1-1
- B.12.2.1 Radioactive Liquid Effluent Monitoring Instrumentation I-B.12.2.1-1
- B.12.2.2 Radioactive Gaseous Effluent Monitoring Instrumentation I-B.12.2.2-1

B12.3 LIQUID EFFLUENTS I-B.12.3.1-1
- B.12.3.1 Liquid Effluent Concentration I-B.12.3.1-1
- B.12.3.2 Dose from Liquid Effluents I-B.12.3.2-1
- B.12.3.3 Liquid Radwaste Treatment Systems I-B.12.3.3-1

B.12.4 GASEOUS EFFLUENTS & TOTAL DOSE I-B.12.4.1-1
- B.12.4.1 Gaseous Effluent Dose Rates I-B.12.4.1-1
- B.12.4.2 Dose From Noble Gases I-B.12.4.2-1
- B.12.4.3 Dose From Iodine-131, Iodine-133Tritium And Radioactive Materials In Particulate Form I-B.12.4.3-1
- B.12.4.4 Gaseous Radwaste Treatment (Offgas) System I-B.12.4.4-1
- B.12.4.5 Ventilation Exhaust Treatment System I-B.12.4.5-1
- B.12.4-6 Mark II Containment I-B.12.4.6-1
- B.12.4.7 Total Dose I-B.12.4.7-1
- B.12.4.8 Main Condenser I-B.12.4.8-1
- B.12.4.9 Dose Limits for Members of the Public I-B.12.4.9-1

B.12.5 RADIOLOGICAL ENVIRONMENTAL MONITORING PROGRAM I-B.12.5.1-1
- B.12.5.1 REMP I-B.12.5.1-1
- B.12.5.2 Land Use Census I-B.12.5.2-1
- B.12.3.3 Interlaboratory Comparison Program I-B.12.5.3-1
- B.12.3.4 Meteorological Monitoring Program I-B.12.5.4-1

TABLE OF CONTENTS

PART II – ODCM

PAGE

1.0 INTRODUCTION – ODCM GENERAL INFORMATION II.1-1

1.1 STRUCTURE OF THE ODCM II.1-1
1.2 REGULATIONS II.1-2
1.2.1 Code of Federal Regulations II.1-2
1.2.2 Radiological Effluent Technical Specifications II.1-4
1.2.3 Offsite Dose Calculation Manual II.1-4
1.2.4 Overlapping Requirements II.1-5
1.2.5 Dose Receiver Methodology II.1-5

1.3 OFFSITE DOSE CALCULATION PARAMETERS II.1-9
1.4 REFERENCES II.1-9

2.0 INSTRUMENTATION AND SYSTEMS II.2-1

2.1 LIQUID RELEASES II.2-1
2.1.1 Radwaste Discharge tanks II.2-1
2.1.2 Cooling Pond Blowdown II.2-1

2.2 RADIATION MONITORS II.2-1
2.2.1 Liquid Radwaste Effluent Monitor II.2-1
2.2.2 Service Water Effluent Monitor II.2-1
2.2.3 RHR Heat Exchange Cooling Water Effluent Monitors II.2-2

2.3 LIQUID RADIATION EFFLUENT MONITORS ALARM AND TRIP SETPOINTS II.2-2
2.3.1 Liquid Radwaste Effluent Monitor II.2-2
2.3.2 Service Water Effluent Monitor II.2-3
2.3.3 RHR Heat Exchanger Cooling Water Effluent Monitors II.2-3
2.3.4 Discharge Flow Rates II.2-3
2.3.5 Allocation of Effluents from Common Release Points II.2-5
2.3.6 Projected Doses from Releases II.2-5
2.3.7 Solidification of Waste/Process Control Program II.2-5

2.4 AIRBORNE RELEASES II.2-5
2.4.1 Condenser Offgas Treatment System II.2-6
2.4.2 Ventilation Exhaust Treatment System II.2-6

2.5 GASEOUS EFFLUENT RADIATION MONITORS II.2-6
2.5.1 Station Vent Stack Effluent Monitor II.2-7
2.5.2 Standby Gas Treatment System Effluent Monitor II.2-8
2.5.3 Reactor Building Ventilation Monitors II.2-8
2.5.4 Condensor Air Ejector Monitors II.2-9
2.5.5 Turbine Building Trackway and North Service Building II.2-9

TABLE OF CONTENTS

PART II – ODCM

PAGE

2.6 GASEOUS RADIATION EFFLUENT ALARM AND TRIP SETPOINTS ... II.2-9
2.6.1 Reactor Building Vent Effluent Monitor ... II.2-9
2.6.2 Condenser Air Ejector Monitors ... II.2-9
2.6.3 Station Vent Stack Effluent Monitor ... II.2-10
2.6.4 Standby Gas Treatment Stack Monitor ... II.2-11
2.6.5 Release Limits ... II.2-11
2.6.6 Release Mixture ... II.2-12
2.6.7 Conversion Factors ... II.2-12
2.6.8 HVAC Flow Rates ... II.2-13
2.6.9 Allocation of Effluents from Common Release Points ... II.2-13
2.6.10 Dose Projections ... II.2-13

3.0 LIQUID EFFLUENTS ... II.3-1
3.1 LIQUID EFFLUENT RELEASES – GENERAL INFORMATION ... II.3-1

3.2 LIQUID EFFLUENT CONCENTRATIONS ... II.3-2

3.3 LIQUID EFFLUENT DOSE CALCULATION REQUIREMENTS ... II.3-4

3.4 DOSE METHODOLOGY ... II.3-4
3.4.1 Liquid Effluent Dose Method: General ... II.3-4
3.4.2 Potable Water Pathway ... II.3-5
3.4.3 Fish Ingestion Pathway ... II.3-6
3.4.4 Offsite Doses ... II.3-7
3.4.5 Drinking Water ... II.3-7

3.5 BIOACCUMULATION FACTORS ... II.3-7

4.0 GASEOUS EFFLUENTS ... II.4-1

4.1 GASEOUS EFFLUENTS – GENERAL INFORMATION ... II.4-1

4.2 GASEOUS EFFLUENTS - DOSE AND DOSE RATE CALCULATION REQUIREMENTS ... II.4-2
4.2.1 Instantaneous Dose Rates ... II.4-2
4.2.2 Time Averaged Dose from Noble Gas ... II.4-4
4.2.3 Time Averaged Dose from Non-Noble Gas Radionuclides ... II.4-8

TABLE OF CONTENTS

PART II – ODCM

PAGE

5.0 TOTAL DOSE II.5-1

5.1 TOTAL DOSE CALCULATION REQUIREMENTS II.5-1
5.1.1 Total Effective Dose Equivalent Limits; 10CFR20 and 40CFR190 ..... II.5-1
5.1.2 Total Dose Calculation Methodology II.5-2
5.1.3 BWR Skyshine II.5-2

5.2 BWR SKYSHINE CALCULATION II.5-3

5.3 ONSITE RADWASTE AND RAD MATERIAL STORAGE FACILITIES II.5-5
5.3.1 Process Waste Storage Facilities II.5-5
5.3.2 DAW Storage Facilities II.5-5
5.3.3 ISFSI Facilities II.5-5

5.4 METHODOLOGY II.5-5

5.5 TOTAL DOSE II.5-6

5.6 COMPLIANCE TO TOTAL DOSE LIMITS II.5-7
5.6.1 Total Effective Dose Equivalent Limit – 10CFR20 Compliance II.5-7
5.6.2 Dose to a MEMBER OF THE PUBLIC in the Unrestricted Area II.5-7
5.6.3 Dose to a MEMBER OF THE PUBLIC in the Restricted Area II.5-7
5.6.4 Total Dose Due to the Uranium Fuel Cycle (40CFR190) II.5-8

5.7 WHEN COMPLIANCE ASSESSMENT IS REQUIRED II.5-9

6.0 RADIOLOGICAL ENVIRONMENTAL MONITORING PROGRAM II.6-1

ODCM TABLE OF CONTENTS

LIST OF TABLES

PART I – RADIOLOGICAL EFFLUENT CONTROLS (RECS)

PAGE

Table 1-1 Compliance Matrix I-1.1-6

Table R12.2.1-1 Radioactive Liquid Effluent Monitoring Instrumentation I-12.2.1-5

Table R12.2.2-1 Radioactive Gaseous Effluent Monitoring Instrumentation I-12.2.2-5

Table R12.2.2-2 Radioactive Gaseous Effluent Monitoring Instrumentation Applicability I-12.2.2-7

Table R12.3.1-1 Allowable Concentration of Dissolved or Entrained Noble Gases Released from the Site to Unrestricted Areas in Liquid Waste I-12.3.1-3

Table R12.3.1-2 Radioactive Liquid Waste Sampling and Analysis Program I-12.3.1-4

Table R12.4.1-1 Radioactive Gaseous Waste Sampling and Analysis Program I-12.4.1-2

Table R12.5.1-1 Radiological Environmental Monitoring Program I-12.5.1-6

Table R12.5.1-2 Reporting Levels for Radioactivity Concentrations in Environmental Samples I-12.5.1-11

Table R12.5.1-3 Detection Capabilities for Environmental Sample Analysis Lower Limit of Detection I-12.5.1-12

PART II - ODCM

Table 1-1 Regulatory Dose Limit Matrix II.1-6

Table 1-2 Dose Assessment Receivers II.1-7

Table 1-3 Miscellaneous Dose Assessment Factors: Environmental Parameters II.1-16

Table 1-4 Stable Element Transfer Data II.1-17

Table 2-1 Assumed Composition Of the LaSalle Station Noble Gas Effluent II.2-14

ODCM TABLE OF CONTENTS

LIST OF TABLES

PART II - ODCM

		PAGE
Table 3-1	Bioaccumulation Factors (Bfi) to be Used in the Absence of Site-Specific Data	II.3-8
Table 4-1	Critical Ranges	II.4-17
Table 4-2	Average Wind Speeds	II.4-18
Table 4-3	X/Q and D/Q Maxima at or Beyond the Unrestricted Area Boundary	II.4-19
Table 4-4	X/Q and D/Q Maxima at or Beyond the Restricted Area Boundary	II.4-20
Table 4-5	D/Q at the Nearest Milk Cow and Meat Animal Locations within 5 miles	II.4-21
Table 4-6	Maximum Offsite Finite Plume Gamma Dose Factors Based on 1 cm Depth at the Unrestricted Area Boundary for Various Nuclides	II.4.22
Table 4-7	Maximum Offsite Finite Plume Gamma Dose Factors Based on 1 cm Depth at the Restricted Area Boundary for Various Nuclides	II.4-37
Table 4-8	Parameters for Calculations of N-16 Skyshine Radiation From LaSalle	II.4-52
Table 4-9	Elevated Level Joint Frequency Distribution Table Summary	II.4-53
Table 4-10	Mid Elevation Joint Frequency Distribution Table Summaries	II.4-55
Table 4-11	Ground Level Joint Frequency Distribution Table Summary	II.4-57
Table 4-12	Station Characteristics	II.4-59
Table 4-13	Dose Factors for Noble Gases	II.4-60
Table 4-14	External Dose Factors for Standing on Contaminated Ground DFG_{ij} (mrem/hr per pCi/ m^2)	II.4-61
Table 6-1	Radiological Environmental Monitoring Program	II.6-2

ODCM TABLE OF CONTENTS

LIST OF FIGURES

PART I – RADIOLOGICAL EFFLUENT CONTROLS

PAGE

None

PART II – ODCM

Figure 1-1 Radiation Exposure Pathways to Humans II.1-8

Figure 1-2 Unrestricted Area Boundary II.1-19

Figure 1-3 Restricted Area Boundary II.1-20

Figure 2-1 Simplified Gaseous Radwaste and Gaseous Effluent Flow Diagram II.2-15

Figure 2-2 Simplified Liquid Radwaste Processing Diagram II.2-17

Figure 2-3 Simplified Liquid Effluent Flow Diagram II.2-18

Figure 2-4 Simplified Solid Radwaste Processing Diagram II.2-19

Figure 6-1 Fixed Air Sampling Sites and Outer Ring TLD Locations II.6-8

Figure 6-2 Inner Ring TLD Locations II.6-9

Figure 6-3 Ingestion and Waterborne Exposure Pathway Sample Locations II.6-10

RADIOLOGICAL EFFLUENT CONTROLS

LASALLE STATION
Units 1 and 2

Revison 0

1.0 USE AND APPLICATION

1.1 DEFINITIONS

----------NOTE----------
The defined terms of this section appear in capitalized type and are applicable throughout these Offsite Dose Calculation Manual (ODCM) Controls and Bases.

Term	Definition
ACTION	ACTION shall be that part of a control that prescribes remedial measures required under designated conditions.
CHANNEL CALIBRATION	A CHANNEL CALIBRATION shall be the adjustment, as necessary, of the channel output such that it responds within the necessary range and accuracy to known values of the parameter that the channel monitors. The CHANNEL CALIBRATION shall encompass the entire channel, including the required sensor, alarm, display, and trip functions, and shall include the CHANNEL FUNCTIONAL TEST. Calibration of instrument channels with resistance temperature detector (RTD) or thermocouple sensors may consist of an in-place qualitative assessment of sensor behavior and normal calibration of the remaining adjustable devices in the channel. The CHANNEL CALIBRATION may be performed by means of any series of sequential, overlapping, or total channel steps so that the entire channel is calibrated. For specific calibration requirements refer to surveillance requirements section for the applicable instrumentation.
CHANNEL CHECK	A CHANNEL CHECK shall be a qualitative assessment, by observation, of channel behavior during operation. This determination shall include, where possible, comparison of the channel indication and status to other indications or status derived from independent instrument channels measuring the same parameter.
CHANNEL FUNCTIONAL TEST	A CHANNEL FUNCTIONAL TEST shall be the injection of a simulated or actual signal into the channel as close to the sensor as practicable to verify OPERABILITY, including required alarm, interlock, display, and trip functions, and channel failure trips. The CHANNEL FUNCTIONAL TEST may be performed by means of any series of sequential, overlapping, or total channel steps so that the entire channel is tested.

(continued)

1.1 DEFINITIONS (continued)

CONTINUOUS SAMPLING	Uninterrupted sampling with the exception of sampling interruptions of short duration for required surveillances.
DOSE EQUIVALENT I-131	That concentration of I-131 (microcuries/gram) that alone would produce the same thyroid dose as the quantity and isotopic mixture of I-131, I-132, I-133, I-134, and I-135 actually present. The thyroid dose conversion factors used for this calculation shall be those listed in Table III of TID -14844, AEC, 1962, "Calculation of Distance Factors for Power and Test Reactor Sites"; Table E-7 of Regulatory Guide 1.109, Rev. 1, NRC, 1977; or ICRP 30, Supplement to Part 1, pages 192-212, Table titled, "Committed Dose Equivalent in Target Organs or Tissues per Intake of Unit Activity."
GASEOUS RADWASTE TREATMENT SYSTEM	Any system designed and installed to reduce radioactive gaseous effluents by collecting primary coolant system offgases from the primary system and providing for delay or holdup for the purpose of reducing the total radioactivity prior to release to the environment.
MEMBERS OF THE PUBLIC	Any individual, except when that individual is receiving an occupational dose.
MODE	A MODE shall correspond to any one inclusive combination of mode switch position, average reactor coolant temperature, and reactor vessel head closure bolt tensioning specified in Technical Specifications with fuel in the reactor vessel.
OCCUPATIONAL DOSE	The dose received by an individual in the course of employment in which the individual's assigned duties involve exposure to radiation and/or to radioactive material from licensed and unlicensed sources of radiation, whether in the possession of the licensee or other person. Occupational dose does not include dose from background radiation, as a patient from medical practices, from voluntary participation in medical research programs, or as a member of the public.

(continued)

1.1 DEFINITIONS (continued)

OFFSITE DOSE CALCULATION MANUAL (ODCM)	The ODCM shall contain the methodology and parameters used in the calculation of offsite doses resulting from radioactive gaseous and liquid effluents, in the calculation of gaseous and liquid effluent monitoring Alarm/Trip Setpoints, and in the conduct of the Radiological Environmental Monitoring Program. The ODCM shall also contain (1) the Radioactive Effluent Controls and Radiological Environmental Monitoring Program and (2) descriptions of the information that should be included in the Annual Radiological Environmental Operating and Radioactive Effluent Release Reports.
OPERABLE - OPERABILITY	A system, subsystem, division, component, or device shall be OPERABLE or have OPERABILITY when it is capable of performing its specified function(s) and when all necessary attendant instrumentation, controls, normal or emergency electrical power, cooling and seal water, lubrication, and other auxiliary equipment that are required for the system, subsystem, division, component, or device to perform its specified function(s) are also capable of performing their related support function(s).
PROCESS CONTROL PROGRAM (PCP)	The PCP shall contain the current formulas, sampling, analyses, test, and determinations to be made to ensure that processing and packaging of solid radioactive wastes based on demonstrated processing of actual or simulated wet solid wastes shall be accomplished in such a way as to assure compliance with 10 CFR Parts 20, 61, and 71, State regulations, burial ground requirements, and other requirements governing the disposal of solid radioactive waste.
PURGE – PURGING	PURGE or PURGING shall be the controlled process of discharging air or gas from a confinement to maintain temperature, pressure, humidity, concentration or other operating condition, in such a manner that replacement air or gas is required to purify the confinement.
RATED THERMAL POWER (RTP)	The applicable unit's RTP shall be a total reactor core heat transfer rate to the reactor coolant as defined in Technical Specifications.

(continued)

1.1 DEFINITIONS (continued)

RADIOLOGICAL EFFLUENT CONTROL STANDARDS (RECS)	A compilation of the various regulatory requirements, surveillance and bases, commitments and/or components of the radiological effluent and environmental monitoring programs for LaSalle Station. To assist in the understanding of the relationship between effluent regulations, ODCM equations, RECS and related Technical Specification requirements, Table 1-1 provides a matrix that relates these various components, as well as the Radiological Environmental Monitoring Program fundamental requirements.
SITE BOUNDARY	That line beyond which the land is not owned, leased, or otherwise controlled by licensee as defined in ODCM Part II Figure 1-3.
SOLIDIFICATION	SOLIDIFICATION shall be the conversion of radioactive wastes from liquid systems to a homogeneous (uniformly distributed), monolithic, immobilized solid with definite volume and shape, bounded by a stable surface of distinct outline on all sides (free-standing).
SOURCE CHECK	A SOURCE CHECK shall be the qualitative assessment of channel response when the channel sensor is exposed to a radioactive source.
THERMAL POWER	THERMAL POWER shall be the total reactor core heat transfer rate to the reactor coolant.
UNRESTRICTED AREA	UNRESTRICTED AREA means an area, access to which is neither limited nor controlled by the licensee.
VENTILATION EXHAUST TREATMENT SYSTEM	A VENTILATION EXHAUST TREATMENT SYSTEM shall be any system designed and installed to reduce gaseous radioiodine or radioactive material in particulate form in effluents by passing ventilation or vent exhaust gases through charcoal adsorbers and/or HEPA filters for the purpose of removing iodines or particulates from the gaseous exhaust system prior to the release to the environment (such a system is not considered to have any effect on noble gas effluents). Engineered Safety Feature (ESF) atmospheric cleanup systems are not considered to be VENTILATION EXHAUST TREATMENT SYSTEM components.

(continued)

1.1 DEFINITIONS (continued)

VENTING — VENTING shall be the controlled process of discharging air or gas from a confinement to maintain temperature, pressure, humidity, concentration or other operating condition, in such a manner that replacement air or gas is not provided or required during VENTING. Vent, used in system names, does not imply a VENTING process.

DEFINITIONS PECULIAR TO ESTIMATING DOSE TO MEMBERS OF THE PUBLIC USING THE ODCM COMPUTER PROGRAM:

a. ACTUAL — Refers to using known release data to project the dose to the public for the previous time period. These data are stored in the database and used to demonstrate compliance with the reporting requirements of RECS.

b. PROJECTED — Refers to using known release data from the previous time period or estimated release data to forecast a future dose to the public. This data is NOT incorporated into the database.

Table 1-1 (Page 1 of 2)

COMPLIANCE MATRIX

Regulation	Dose Component Limit	ODCM Equation	RECS	Technical Specification
10 CFR 50 Appendix I	1. Gamma air dose and beta air dose due to airborne radioactivity in effluent plume.	4-4 4-5	12.4.2	5.5.4.h
	a. Whole body and skin dose due to airborne radioactivity in effluent plume are reported only if certain gamma and beta air dose criteria are exceeded.	4-2 4-8	N/A	N/A
	b Projected doses due to gaseous release, when averaged over 31 days, exceed 0.3 mrem to any organ.	N/A	12.4.5	5.5.4.f
	c Projected doses due to liquid release, when averaged over 31 days, exceed 0.06 mrem to the total body or 0.2 mrem to any organ.	N/A	12.3.3	5.5.4.f
	2. CDE for all organs and all four age groups due to iodines and particulates in effluent plume. All pathways are considered.	4-14	12.4.3	5.5.4.i
	3. CDE for all organs and all four age groups due to radioactivity in liquid effluents.	3-3	12.3.2	5.5.4.d
10 CFR 20	1. TEDE, totaling all deep dose equivalent components (direct, ground and plume shine) and CDE (all pathways, both airborne and liquid-borne). CDE evaluation is made for adult only using FGR 11 database.	5-3	12.4.9	5.5.4.c
40 CFR 190 (now by reference, also part of 10 CFR 20)	1. Whole body dose (DDE) due to direct dose, ground and plume shine from all sources at a station.	5-2	12.4.7	5.5.4.j
	2. Organ doses (CDE) to an adult due to all pathways.	3-3 4-8		
Technical Specifications	1. "Instantaneous" whole body (DDE), skin (SDE), and thyroid (CDE) dose rates due to radioactivity in airborne effluents. For the thyroid dose, only inhalation is considered.	4-9 4-10 4-6	12.4.1	5.5.4.g
	2. "Instantaneous" concentration limits for liquid effluents.	3-5	12.3.1	5.5.4.b
	3. Radioactive Effluent Release Report	N/A	12.6.2	5.6.3

(continued)

Table 1-1 (Page 2 of 2)

COMPLIANCE MATRIX

Regulation	Dose Component Limit	ODCM Equation	RECS	Technical Specification
10CFR50 Appendix I Section IV.B.2	1. Implement environmental monitoring program.	N/A	12.5.1	N/A
10CFR50 Appendix I Section IV.B.3	1. Land Use Census	N/A	12.5.2	N/A
10CFR50 Appendix I Section IV.B.2	1. Interlaboratory Comparison Program	N/A	12.5.3	N/A
10CFR50 Appendix I Section IV.B.2 and Technical Specifications	1. Annual Radiological Environmental Operating Report	N/A	12.6.1	5.6.2

1.0 USE AND APPLICATION

1.2 Logical Connectors

PURPOSE	The purpose of this section is to explain the meaning of logical connectors. Logical connectors are used in ODCM to discriminate between, and yet connect, discrete Conditions, Required Actions, Completion Times, Surveillances, and Frequencies. The only logical connectors that appear in ODCM are AND and OR. The physical arrangement of these connectors constitutes logical conventions with specific meanings.
BACKGROUND	Several levels of logic may be used to state Required Actions. These levels are identified by the placement (or nesting) of the logical connectors and by the number assigned to each Required Action. The first level of logic is identified by the first digit of the number assigned to a Required Action and the placement of the logical connector in the first level of nesting (i.e., left justified with the number of the Required Action). The successive levels of logic are identified by additional digits of the Required Action number and by successive indentations of the logical connectors. When logical connectors are used to state a Condition, Completion Time, Surveillance, or Frequency, only the first level of logic is used, and the logical connector is left justified with the statement of the Condition, Completion Time, Surveillance, or Frequency.
EXAMPLES	The following examples illustrate the use of logical connectors.

(continued)

EXAMPLES (continued)

EXAMPLE 1.2-1

ACTIONS

CONDITION	REQUIRED ACTION	COMPLETION TIME
A. Control not met.	A.1 Verify . . . AND A.2 Restore . . .	

In this example, the logical connector AND is used to indicate that, when in Condition A, both Required Actions A.1 and A.2 must be completed.

(continued)

EXAMPLES (continued)

EXAMPLE 1.2-2

ACTIONS

CONDITION	REQUIRED ACTION	COMPLETION TIME
A. Control not met.	A.1 Trip . . . OR A.2.1 Verify . . . AND A.2.2.1 Reduce . . . OR A.2.2.2 Perform . . . OR A.3 Align	

This example represents a more complicated use of logical connectors. Required Actions A.1, A.2 and A.3 are alternate choices, only one of which must be performed as indicated by the use of the logical connector OR and the left justified placement. Any one of these three Action may be chosen. If A.2 is chose, then both A.2.1 and A.2.2 must be performed as indicated by the logical connector AND. Required Action A.2.2 is met by performing A.2.2.1 or A.2.2.2. The indented position of the logical connector OR indicates that A.2.2.1 and A.2.2.2 are alternative choices, only one of which must be performed.

1.0 USE AND APPLICATION

1.3 Completion Times

PURPOSE	The purpose of this section is to establish the Completion Time convention and to provide guidance for its use.
BACKGROUND	ODCM Radiological Effluent Controls (RECs) specify minimum requirements for ensuring safe operation of the unit. The ACTIONS associated with a REC state Conditions that typically describe the ways in which the requirements of the REC can fail to be met. Specified with each stated Condition are Required Action(s) and Completion Times.
DESCRIPTION	The Completion Time is the amount of time allowed for completing a Required Action. It is referenced to the time of discovery of a situation (e.g., inoperable equipment or variable not within limits) that requires entering an ACTIONS Condition unless otherwise specified, providing the unit is in a MODE or specified condition stated in the Applicability of the REC. Required Actions must be completed prior to the expiration of the specified Completion Time. An ACTIONS Condition remains in effect and the Required Actions apply until the Condition no longer exists or the unit is not within the REC Applicability. If situations are discovered that require entry into more than one Condition at a time within a single REC (multiple Conditions), the Required Actions for each Condition must be performed within the associated Completion Time. When in multiple Conditions, separate Completion Times are tracked for each Condition starting from the time of discovery of the situation that required entry into the Condition. Once a Condition has been entered, subsequent divisions, subsystem, components or variables expressed in the Condition, discovered to be inoperable or not within limits, will <u>not</u> result in separate entry into the Condition unless specifically stated. The Required Actions of the Condition continue to apply to each additional failure, with Completion Times based on initial entry into the Condition. (continued)

DESCRIPTION (continued)

However, when a subsequent division, subsystem, component, or variable expressed in the Condition is discovered to be inoperable or not within limits, the Completion Time(s) may be extended. To apply this Completion Time extension, two criteria must first be met. The subsequent inoperability:

a. Must exist concurrent with the first inoperability; and

b. Must remain inoperable or not within limits after the first inoperability is resolved.

The total Completion Time allowed for completing a Required Action to address the subsequent inoperability shall be limited to the more restrictive of either:

a. The stated Completion Time, as measured from the initial entry into the Condition, plus an additional 24 hours; or

b. The stated Completion Time as measured from discovery of the subsequent inoperability.

The above Completion Time extension does not apply to those RECs that have exceptions that allow completely separate re-entry into the Condition (for each division, subsystem, component, or variable expressed in the Condition) and separate tracking of Completion Times based on this re-entry. These exceptions are stated in individual RECs.

The above Completion Time extension does not apply to a Completion Time with a modified "time zero." This modified "time zero" may be expressed as a repetitive time (i.e., "once per 8 hours," where the Completion Time is referenced from a previous completion of the Required Action versus the time of Condition entry) or as a time modified by the phrase "from discovery . . ." Example 1.3-3 illustrates one use of this type of Completion Time. The 10 day Completion Time specified for Condition A and B in Example 1.3-3 may not be extended.

EXAMPLES

The following examples illustrate the use of Completion Times with different types of Conditions and changing Conditions.

(continued)

EXAMPLES (continued)

EXAMPLE 1.3-1

ACTIONS

CONDITION	REQUIRED ACTION	COMPLETION TIME
B. Required Action and associated Completion Time not met.	B.1 Be in MODE 3.	12 hours
	AND	
	B.2 Be in MODE 4.	36 hours

Condition B has two Required Actions. Each Required Action has its own separate Completion Time. Each Completion Time is referenced to the time that Condition B is entered.

The Required Actions of Condition B are in to be in MODE 3 within 12 hours AND in MODE 4 within 36 hours. A total of 12 hours is allowed for reaching MODE 3 and a total of 36 hours (not 48 hours) is allowed for reaching MODE 4 from the time that Condition B was entered. If MODE 3 is reached within 6 hours, the time allowed for reaching MODE 4 is the next 30 hours because the total time allowed for reaching Mode 4 is 36 hours.

If Condition B is entered while in MODE 3, the time allowed for reaching MODE 4 is the next 36 hours.

(continued)

EXAMPLES (continued)

EXAMPLE 1.3-2

ACTIONS

CONDITION	REQUIRED ACTION	COMPLETION TIME
A. One monitor inoperable.	A.1 Restore monitor to OPERABLE status.	7 days
B. Required Action and associated Completion Time not met.	B.1 Be in MODE 3. AND B.2 Be in MODE 4.	12 hours 36 hours

When a monitor is declared inoperable, Condition A is entered. If the monitor is not restored to OPERABLE status within 7 days, Condition B is also entered and the Completion Time clocks for Required Action B.1 and B.2 start. If the inoperable monitor is restored to OPERABLE status after Condition B is entered, Condition A and B are exited, and therefore, the Required Actions of Condition B may be terminated.

When a monitor pump is declared inoperable while the first monitor is still inoperable, Condition A is not re-entered for the second monitor. REC 12.0.3 is entered, since the ACTIONS do not include a Condition from more than one inoperable monitor. The Completion Time clock for Condition A does not stop after REC 12.0.3 is entered, but continues to be tracked from the time Condition A was initially entered.

While in REC 12.0.3, if one of the inoperable monitors is restored to OPERABLE status and the Completion Time for Condition A has not expired, REC 12.0.3 may be exited and operation continued in accordance with Condition A.

(continued)

EXAMPLES

EXAMPLE 1.3-2 (continued)

While in REC 12.0.3, if one of the inoperable monitors is restored to OPERABLE status and the Completion Time for Condition A has expired, REC 12.0.3 may be exited and operation continued in accordance with Condition B. The Completion Time for Condition B is tracked from the time the Condition A Completion Time expired.

On restoring one of the monitors to OPERABLE status, the Condition A Completion Time is not reset, but continues from the time the first monitor was declared inoperable. This Completion Time may be extended if the monitor restored to OPERABLE status was the first inoperable monitor. A 24 hour extension to the stated 7 days is allowed, provided this does not result in the second monitor being inoperable for > 7 days.

(continued)

EXAMPLES (continued)

EXAMPLE 1.3-3

ACTIONS

CONDITION	REQUIRED ACTION	COMPLETION TIME
A. One Function X subsystem inoperable.	A.1 Restore Function X subsystem to OPERABLE status.	7 days AND 10 days from discovery of failure to meet the Control
B. One Function Y subsystem inoperable.	B.1 Restore Function Y subsystem to OPERABLE status.	72 hours AND 10 days from discovery to meet Control
C. One Function X subsystem inoperable. AND One Function Y subsystem inoperable.	C.1 Restore Function X subsystem to OPERABLE status. OR C.2 Restore Function Y subsystem to OPERABLE status.	72 hours 72 hours

(continued)

EXAMPLES

EXAMPLE 1.3-3 (continued)

When one Function X subsystem and one Function Y subsystem are inoperable, Condition A and Condition B are concurrently applicable. The Completion Times for Condition A and Condition B are tracked separately for each subsystem, starting from the time each subsystem was declared inoperable and the Condition was entered. A separate Completion Time is established for Condition C and tracked from the time the second subsystem was declared inoperable (i.e., the time the situation described in Condition C was discovered).

If Required Action C.2 is completed within the specified Completion Time, Conditions B and C are exited. If the Completion Time for Required Action A.1 has not expired, operation may continue in accordance with Condition A. The remaining Completion Time in Condition A is measured from the time the affected subsystem was declared inoperable (i.e., initial entry into Condition A).

The Completion Times of Conditions A and B are modified by a logical connector, with a separate 10 day Completion Time measured from the time it was discovered the REC was not met. In this example, without the separate Completion Time, it would be possible to alternate between Conditions A, B, and C in such a manner that operation could continue indefinitely without ever restoring systems to meet the REC. The separate Completion Time modified by the phrase "from discovery of failure to meet the Control" is designed to prevent indefinite continued operation while not meeting the REC. This Completion Time allows for an exception to the normal "time zero" for beginning the Completion Time "clock." In this instance, the Completion Time "time zero" is specified as commencing at the time the associated Condition was entered.

(continued)

EXAMPLES (continued)

EXAMPLE 1.3-4

ACTIONS

CONDITION	REQUIRED ACTION	COMPLETION TIME
A. One or more required instruments inoperable.	A.1 Restore instruments(s) to OPERABLE status.	4 hours
B. Required Action and associated Completion Time not met.	B.1 Be in MODE 3. AND B.2 Be in MODE 4.	12 hours 36 hours

A single Completion Time is used for any number of instruments inoperable at the same time. The Completion Time associated with Condition A is based on the initial entry into Condition A and is not tracked on a per instrument basis. Declaring subsequent instruments inoperable, while Condition A is still in effect, does not trigger the tracking of separate Completion Times.

Once one of the instruments has been restored to OPERABLE status, the Condition A Completion Time is not reset, but continues from the time the first instrument was declared inoperable. The Completion Time may be extended if the instrument restored to OPERABLE status was the first inoperable instrument. The Condition A Completion Time may be extended for up to 4 hours provided this does not result in any subsequent instrument being inoperable for > 4 hours.

If the Completion Time of 4 hours (plus the extension) expires while one or more instruments are still inoperable, Condition B is entered.

(continued)

EXAMPLES (continued)

EXAMPLE 1.3-5

ACTIONS

----------NOTE----------
Separate Condition entry is allowed for each inoperable instrument.

CONDITION	REQUIRED ACTION	COMPLETION TIME
A. One or more instruments inoperable.	A.1 Restore instrument(s) to OPERABLE status.	4 hours
B. Required Action and associated Completion Time not met.	B.1 Be in MODE 3. AND B.2 Be in MODE 4.	12 hours 36 hours

The Note above the ACTIONS Table is a method of modifying how the Completion Time is tracked. If this method of modifying how the Completion Time is tracked was applicable only to a specific Condition, the Note would appear in that Condition rather than at the top of the ACTIONS Table.

The Note allows Condition A to be entered separately for each inoperable instrument, and Completion Times tracked on a per instrument basis. When an instrument is declared inoperable, Condition A is entered and its Completion Time starts. If subsequent instruments are declared inoperable, Condition A is entered for each instrument and separate Completion Times start and are tracked for each instrument.

If the Completion Time associated with an instrument in Condition A expires, Condition B is entered for that instrument. If the Completion Times associated with subsequent instruments in Condition A expire, Condition B is entered separately for each instrument and separate Completion Times start and are tracked for each instrument. If a instrument that caused entry into Condition B is restored to OPERABLE status, Condition B is exited for that instrument.

Since the Note in this example allows multiple Condition entry and tracking of separate Completion Times, Completion Time extensions do not apply.

(continued)

EXAMPLES (continued)

EXAMPLE 1.3-6

ACTIONS

CONDITION	REQUIRED ACTION	COMPLETION TIME
A. One channel inoperable.	Perform RSR 12.x.x.x. OR Reduce THERMAL POWER to ≤ 50% RTP.	Once per 8 hours 8 hours
B. Required Action and associated Completion Time not met.	B.1 Be in MODE 3.	12 hours

Entry into Condition A offers a choice between Required Action A.1 or A.2. Required Action A.1 has a "once per" Completion Time, which qualifies for the 25% extension, per RSR 12.0.2 to each performance after the initial performance. The initial 8 hour interval of Required Action A.1 begins when Condition A is entered and the initial performance of Required Action A.1 must be completed within the first 8 hour interval. If Required Action A.1 is followed and the Required Action is not met within the Completion Time (plus the extension allowed by RSR 12.0.2), Condition B is entered. If Required Action A.2 is followed and the Completion Time of 8 hours is not met, Condition B is entered.

If after entry into Condition B, Required Action A.1 or A.2 is met, Condition B is exited and operation may then continue in Condition A.

(continued)

EXAMPLES (continued)

EXAMPLE 1.3-7

ACTIONS

CONDITION	REQUIRED ACTION	COMPLETION TIME
A. One subsystem inoperable.	A.1 Verify affected subsystem isolated.	1 hour AND Once per 8 hours thereafter
	AND	
	A.2 Restore subsystem to OPERABLE status.	72 hours
B. Required Action and associated Completion Time not met.	B.1 Be in MODE 3.	12 hours
	AND	
	B.2 Be in MODE 4.	36 hours

Required Action A.1 has two Completion Times. The 1 hour Completion Time begins at the time the Condition is entered and each "Once per 8 hours thereafter" interval begins upon performance of Required Action A.1.

If after Condition A is entered, Required Action A.1 is not met within either the initial 1 hour or any subsequent 8 hour interval from the previous performance (plus the extension allowed by RSR 12.0.2), Condition B is entered. The Completion Time clock for Condition A does not stop after Condition B is entered, but continues from the time Condition A was initially entered. If Required Action A.1 is met after Condition B is entered, Condition B is exited and operation may continue in accordance with Condition A, provided the Completion Time for Required Action A.2 has not expired.

IMMEDIATE COMPLETION TIME

When "Immediately" is used as a Completion Time, the Required Action should be pursued without delay and in a controlled manner.

1.0 USE AND APPLICATION

1.4 Frequency

PURPOSE	The purpose of this section is to define the proper use and application of Frequency requirements.

DESCRIPTION

Each ODCM Radiological Effluent Surveillance Requirement (RSR) has a specified Frequency in which the Surveillance must be met in order to meet the associated ODCM REC. An understanding of the correct application of the specified Frequency is necessary for compliance with the RSR.

The "specified Frequency" is referred to throughout this section and each of the Requirements of Section 12.0, ODCM Surveillance Requirement (RSR) Applicability. The "specified Frequency" consists of the requirements of the Frequency column of each RSR, as well as certain Notes in the Surveillance column that modify performance requirements.

Sometimes special situations dictate when the requirements of a Surveillance are to be met. They are "otherwise stated" conditions allowed by RSR 12.0.1. They may be stated as clarifying Notes in the Surveillance, as part of the Surveillance, or both. Example 1.4-4 discusses these special situations.

Situations where a Surveillance could be required (i.e., its Frequency could expire), but where it is not possible or not desired that it be performed until sometime after the associated REC is within its Applicability, represent potential RSR 12.0.4 conflicts. To avoid these conflicts, the RSR (i.e., the Surveillance or the Frequency) is stated such that it is only "required" when it can be and should be performed. With a RSR satisfied, RSR 12.0.4 imposes no restriction.

The use of "met" or "performed" in these instances conveys specified meanings. A Surveillance is "met" only when the acceptance criteria are satisfied. Known failure of the requirements of a Surveillance, even without a Surveillance specifically being "performed," constitutes a Surveillance not "met." "Performance" refers only to the requirement to

(continued)

1.0 USE AND APPLICATION

1.4 Frequency

DESCRIPTION (continued)

specifically determine the ability to meet the acceptance criteria. RSR 12.0.4 restrictions would not apply if both the following conditions are satisfied:

a. The Surveillance is not required to be performed; and

b. The Surveillance is not required to be met or, even if required to be met, is not known to be failed.

EXAMPLES

The following examples illustrate the various ways that Frequencies are specified. In these examples, the Applicability of the REC (REC not shown) is MODES 1, 2, and 3.

EXAMPLE 1.4-1

SURVEILLANCE REQUIREMENTS

SURVEILLANCE	FREQUENCY
Perform CHANNEL CHECK	12 hours

Example 1.4-1 contains the type of RSR most often encountered in the ODCM. The Frequency specifies an interval (12 hours) during which the associated Surveillance must be performed at least one time. Performance of the Surveillance initiates the subsequent interval. Although the Frequency is stated as 12 hours, an extension of the time interval to 1.25 times the interval specified in the Frequency is allowed by RSR 12.0.2 for operational flexibility. The measurement of this interval continues at all times, event when the RSR is not required to be met per RSR 12.0.1 (such as when the equipment is inoperable, a variable is outside specified limits, or the unit is outside the Applicability of the REC). If the interval specified by RSR 12.0.2 is exceeded while the unit is in a MODE or other specified condition in the Applicability of the REC,

(continued)

1.0 USE AND APPLICATION

1.4 Frequency

EXAMPLES

EXAMPLE 1.4-1 (continued)

and the performance of the Surveillance is not otherwise modified (refer to Examples 1.4-3 and 1.4-4), then RSR 12.0.3 becomes applicable.

If the interval as specified by RSR 12.0.2 is exceeded while the unit is not in a MODE or other specified condition in the Applicability of the REC for which performance of the RSR is required, the Surveillance must be performed within the Frequency requirements of RSR 12.0.2 prior to entry into the MODE or other specified condition. Failure to do so would result in a violation of RSR 12.0.4.

EXAMPLE 1.4-2

SURVEILLANCE REQUIREMENTS

SURVEILLANCE	FREQUENCY
Verify flow is within limits.	Once within 12 hours after ≥ 25% RTP AND 24 hours thereafter

Example 1.4-2 has two Frequencies. The first is a one time performance Frequency, and the second is of the type shown in Example 1.4-1. The logical connector "AND" indicates that both Frequency requirements must be met. Each time reactor power is increased from a power level < 25% RTP to ≥ 25% RTP, the Surveillance must be performed within 12 hours.

(continued)

1.0 USE AND APPLICATION

1.4 Frequency

EXAMPLES

EXAMPLE 1.4-2 (continued)

The use of "once" indicates a single performance will satisfy the specified Frequency (assuming no other Frequencies are connected by "AND"). This type of Frequency does not qualify for the extension allowed by RSR 12.0.2.

"Thereafter" indicates future performances must be established per RSR 12.0.2, but only after a specified condition is first met (i.e., the "once" performance in this example). If reactor power decreases to < 25% RTP, the measurement of both intervals stops. New intervals start upon reactor power reaching 25% RTP.

EXAMPLE 1.4-2

SURVEILLANCE REQUIREMENTS

SURVEILLANCE	FREQUENCY
----------NOTE---------- Not required to be performed until 12 hours after ≥ 25% RTP. ----------	
Perform channel adjustment.	7 days

The interval continues whether or not the unit operation is < 25% RTP between performances.

As the Note modifies the required performance of the Surveillance, it is construed to be part of the "specified Frequency." Should the 7 day interval be exceeded while operation is < 25% RTP, this Note allows 12 hours after power reaches ≥ 25% RTP to perform the Surveillance. The Surveillance is still considered to be within the "specified Frequency." Therefore, if the Surveillance were not performed within the 7 day interval (plus the extension allowed by RSR 12.0.2), but operation was < 25% RTP,

(continued)

1.0 USE AND APPLICATION

1.4 Frequency

EXAMPLES

EXAMPLE 1.4-3 (continued)

it would not constitute a failure of the RSR or failure to meet the REC. Also, no violation of RSR 12.0.4 occurs when changing MODES, even with the 7 day Frequency not met, provided operation does not exceed 12 hours with power ≥ 25% RTP.

Once the unit reaches 25% RTP, 12 hours would be allowed for completing the Surveillance. If the Surveillance were not performed within this 12 hour interval, there would then be a failure to perform a Surveillance within the specified Frequency, and the provisions of RSR 12.0.3 would apply.

EXAMPLE 1.4-2

SURVEILLANCE REQUIREMENTS

SURVEILLANCE	FREQUENCY
----------NOTE---------- Only required to be met in MODE 1. ----------	
Verify leakage rates are within limits.	24 hours

Example 1.4-4 specifies that the requirements of this Surveillance do not have to be met until the unit is in MODE 1. The interval measurement for the Frequency of this Surveillance continues at all times, as described in Example 1.4-1. However, the Note constitutes an "otherwise stated" exception to the Applicability of this Surveillance. Therefore, if the Surveillance were not performed within the 24 hour interval (plus the extension allowed by RSR 12.0.2), but the unit was not in MODE 1, there would be no failure of the RSR nor failure to meet the REC. Therefore, no violation of RSR 12.0.4 occurs when changing MODES, even with the 24 hour Frequency exceeded, provided the MODE change was not made into MODE 1. Prior to entering MODE 1 (assuming again that the 24 hour Frequency were not met), RSR 12.0.4 would require satisfying the RSR.

1.0 USE AND APPLICATION

1.5 REC and RSR Implementation

The ODCM provides those limitations upon plant operations which are part of the licensing basis for the station but do not meet the criteria for continued inclusion in the Technical Specifications.

It also provides information which supplements the Technical Specifications by implementing the requirements of Technical Specification Sections 5.5.1, 5.5.4, 5.6.2, and 5.6.3.

RECs and RSRs are implemented the same as Technical Specifications (see 12.0 Applicability). However, RECs and RSRs are treated as plant procedures and are not part of the Technical Specifications. Therefore the following exceptions apply:

a. Violations of the Action or Surveillance requirements in a REC are not reportable as conditions prohibited by, or deviations from, the Technical Specifications per 10 CFR 50.72 or 10 CFR 50.73.

b. Power reduction or plant shutdowns required to comply with the Actions of a REC are not reportable per 10 CFR 50.72 or 10 CFR 50.73.

2.0 through 11.0 NOT USED

INTENTIONALLY BLANK

Sections 2.0 through 11.0 are not used
in the ODCM in order to maintain the
Original ODCM numbering convention

12.0 ODCM RADIOLOGICAL EFFLUENT CONTROL (REC) APPLICABILITY

REC 12.0.1	RECs shall be met during the MODES or other specified conditions in the Applicability, except as provided in REC 12.0.2.
REC 12.0.2	Upon discovery of a failure to meet a REC, the Required Actions of the associated Conditions shall be met, except as provided in REC 12.0.5. If the REC is met or is no longer applicable prior to expiration of the specified Completion Time(s), completion of the Required Action(s) is not required, unless otherwise stated.
REC 12.0.3	When a REC is not met and the associated ACTIONS are not met, an associated ACTION is not provided, or if directed by the associated ACTIONS, action shall be initiated within 1 hour to: a. Implement appropriate compensatory actions as needed; b. Verify that the plant is not in an unanalyzed condition or that a required safety function is not compromised by the inoperabilities; and c. Within 12 hours, obtain Shift Operations Superintendent or designee approval of the compensatory actions and the plan for exiting REC 12.0.3. Exceptions to this REC are stated in the individual RECs. Where corrective measures are completed that permit operation in accordance with the REC or ACTIONS, completion of the actions required by REC 12.0.3 is not required. REC 12.0.3 is only applicable in MODES 1, 2, and 3.
REC 12.0.4	When a REC is not met, entry into a MODE or other specified condition in the Applicability shall not be made except when the associated ACTIONS to be entered permit continued operation in the MODE or other specified

(continued)

12.0 REC APPLICABILITY

REC 12.0.4 (continued)	condition in the Applicability for an unlimited period of time. This REC shall not prevent changes in MODES or other specified conditions in the Applicability that are required to comply with ACTIONS or that are part of a shutdown of the unit. Exceptions to this REC are stated in the individual RECs. REC 12.0.4 is only applicable for entry into a MODE or other specified condition in the Applicability in MODES 1, 2, and 3.
REC 12.0.5	Equipment removed from service or declared inoperable to comply with ACTIONS may be returned to service under administrative control solely to perform testing required to demonstrate its OPERABILITY or the OPERABILITY of other equipment. This is an exception to REC 12.0.2 for the system returned to service under administrative control to perform the testing required to demonstrate OPERABILITY.
REC 12.0.6	RECs, including associated ACTIONS, shall apply to each unit individually, unless otherwise indicated. Whenever the REC refers to a system or component that is shared by both units, the ACTIONS will apply to both units simultaneously.

12.0 ODCM RADIOLOGICAL EFFLUENT SURVEILLANCE REQUIREMENT (RSR) APPLICABILITY

RSR 12.0.1	RSRs shall be met during the MODES or other specified conditions in the Applicability for individual RECs, unless otherwise stated in the RSR. Failure to meet a RSR, whether such failure is experienced during the performance of the RSR or between performances of the RSR, shall be failure to meet the REC. Failure to perform a RSR within the specified Frequency shall be failure to meet the REC except as provided in RSR 12.0.3. RSRs do not have to be performed on inoperable equipment or variables outside specified limits.
RSR 12.0.2	The specified Frequency for each RSR is met if the RSR is performed within 1.25 times the interval specified in the Frequency, as measured from the previous performance or as measured from the time a specified condition of the Frequency is met. For Frequencies specified as "once," the above interval extension does not apply. If a Completion Time requires periodic performance on a "once per . . ." basis, the above Frequency extension applies to each performance after the initial performance. Exceptions to this RSR are stated in the individual RSRs.
RSR 12.0.3	If it is discovered that a RSR was not performed within its specified Frequency, then compliance with the requirement to declare the REC not met may be delayed, from the time of discovery, up to 24 hours or up to the limit of the specified Frequency, whichever is greater. This delay period is permitted to allow performance of the RSR. A risk evaluation shall be performed for any Surveillance delayed greater than 24 hours and the risk impact shall be managed. If the RSR is not performed within the delay period, the REC must immediately be declared not met, and the applicable Condition(s) must be entered. When the RSR is performed within the delay period and the RSR is not met, the REC must immediately be declared not met, and the applicable Condition(s) must be entered.

(continued)

12.0 RSR APPLICABILITY (continued)

RSR 12.0.4	Entry into a MODE or other specified condition in the Applicability of a REC shall not be made unless the REC's RSRs have been met within their specified Frequency. This provision shall not prevent entry into MODES or other specified conditions in the Applicability that are required to comply with ACTIONS or that are part of a shutdown of the unit. RSR 12.0.4 is only applicable for entry into a MODE or other specified condition in the Applicability in MODES 1, 2, and 3.
RSR 12.0.5	RSRs shall apply to each unit individually, unless otherwise indicated.

12.1 NOT USED

INTENTIONALLY BLANK

12.2 INSTRUMENTATION

12.2.1 Radioactive Liquid Effluent Monitoring Instrumentation.

REC 12.2.1 The Radioactive Liquid Effluent Instrumentation channels in Table R12.2.1-1 shall be OPERABLE with their alarm/trip setpoints to ensure that the limits of REC 12.3.1 are not exceeded.

APPLICABILITY: When flow is present in the system.

ACTIONS

----------NOTE----------

1. Separate Condition entry is allowed for each instrument channel.
2. For instruments 3.a and 3.b, initiating radioactive releases via the affected pathway is not allowed unless the associated instrument is OPERABLE.

CONDITION	REQUIRED ACTION	COMPLETION TIME
A. One or more required instrument channels inoperable due to its alarm/trip setpoint less conservative than required.	A.1 Suspend the release of radioactive liquid effluents monitored by the instrument channel. OR A.2 Enter the Condition referenced in Table R12.2.1-1 for the instrument channel.	Immediately Immediately
B. One or more required instrument channels inoperable for reasons other than Condition A.	B.1 Enter the Condition referenced In Table R12.2.1-1 for the instrument channel.	Immediately

(continued)

ACTIONS

CONDITION	REQUIRED ACTION	COMPLETION TIME
C. As required by Required Action A.2 or B.1 and referenced in Table R12.2.1-1.	C.1 Perform RSR 12.3.1.1 on at least two independent samples of the tanks contents.	Prior to each release
	AND	
	C.2 Verify the release rate calculations and discharge valve line-up independently with at least two qualified members of the technical staff.	Prior to each release
	AND	
	C.3 Return instrument channel to OPERABLE status.	14 days
D. Required Action and associated Completion Time of Condition C not met.	D.1 Suspend release of radioactive effluents via this pathway.	Immediately
E. As required by Required Action A.2 or B.1 and referenced in Table R12.2.1-1.	E.1 Analyze affected effluent grab samples for principal gamma emitters and I-131 at an LLD as specified in Table R12.3.1-2.	Once per 8 hours
	AND	
	E.2 Restore the instrument channel to OPERABLE status.	30 days

(continued)

ACTIONS

CONDITION	REQUIRED ACTION	COMPLETION TIME
F. As required by Required Action A.2 or B.1 and referenced in Table R12.2.1-1.	F.1 ----------NOTE---------- Pump curves for instrument 3.a, or known valve positions for instrument 3.b, may be used to estimate flow. ---------- Estimate the flow rate for the release in progress via the affected pathway.	Once per 4 hours
G. ----------NOTE---------- Required Action G.1 shall be completed if this Condition is entered. ---------- Required Action C.3 or E.2 and associated Completion Time not met.	G.1 Explain why the inoperability was not corrected in a timely manner in the next Radioactive Effluent Release Report.	In accordance with Technical Specification 5.6.3.

SURVEILLANCE REQUIREMENTS

SURVEILLANCE		FREQUENCY
RSR 12.2.1.1	Perform SOURCE CHECK.	Prior to each release
RSR 12.2.1.2	Perform CHANNEL FUNCTIONAL TEST.	Prior to each Release
RSR 12.2.1.3	Perform CHANNEL CHECK.	24 hours
RSR 12.2.1.4	Perform SOURCE CHECK.	31 days
RSR 12.2.1.5	Perform CHANNEL FUNCTIONAL TEST. Except for Instrument 3.b, the test shall also demonstrate that the instrument indicates measured levels above the alarm/trip setpoint and that the control room alarm annunciates and the affected pathway automatically isolates, as applicable, under the following conditions: a. Loss of power, b Downscale failure, or c. Controls not set in Operate or High Voltage mode.	92 days
RSR 12.2.1.6	Perform CHANNEL CALIBRATION.	18 months
RSR 12.2.1.7	Perform CHANNEL CALIBRATION	24 months

Table R12.2.1-1 (page 1 of 2)
Radioactive Liquid Effluent Monitoring Instrumentation

INSTRUMENT	REQUIRED CHANNELS PER INSTRUMENT	CONDITION REFERENCED FROM REQUIRED ACTION A.2 AND B.1	SURVEILLANCE REQUIREMENTS
1. Gamma Scintillation Monitor providing Alarm and Automatic Termination of Release			
a. Liquid Radwaste Effluents Line	1	C	RSR 12.2.1.1 RSR 12.2.1.3 RSR 12.2.1.5 RSR 12.2.1.7[(ε)]
2. Gamma Scintillation Monitors providing Alarm but not providing Automatic Termination of Release			
a. Service Water Effluent Line (Unit 1)	1	E	RSR 12.2.1.4 RSR 12.2.1.3 RSR 12.2.1.5 RSR 12.2.1.7[(ε)]
b. Service Water Effluent Line (Unit 2)	1	E	RSR 12.2.1.4 RSR 12.2.1.3 RSR 12.2.1.5 RSR 12.2.1.7[(ε)]
c. RHR Service Water (Line A) Effluent Line (Unit 1)	1	E	RSR 12.2.1.4 RSR 12.2.1.3 RSR 12.2.1.5 RSR 12.2.1.7[(ε)]
d. RHR Service Water (Line B) Effluent Line (Unit 1)	1	E	RSR 12.2.1.4 RSR 12.2.1.3 RSR 12.2.1.5 RSR 12.2.1.7[(a)]
e. RHR Service Water (Line A) Effluent Line (Unit 2)	1	E	RSR 12.2.1.4 RSR 12.2.1.3 RSR 12.2.1.5 RSR 12.2.1.7[(a)]
f. RHR Service Water (Line B) Effluent Line (Unit 2)	1	E	RSR 12.2.1.4 RSR 12.2.1.3 RSR 12.2.1.5 RSR 12.2.1.7[(a)]

(continued)

[(a)] The initial CHANNEL CALIBRATION shall be performed using one or more of the reference radioactive standards certified by the National Institute of Standards and Technology (NIST) or using standards that have been obtained from suppliers that participate in measurement assurance activities with NIST. These standards shall permit calibrating the system over its intended range of energy and measurement range. For subsequent CHANNEL CALIBRATION, the initial reference radioactive standards or radioactive sources that have been related to the initial calibration shall be used, in order to demonstrate linearity of the original calibration. This transfer calibration, combined with signal inputs, satisfies channel calibration and functional test requirements as implemented by station procedures.

Table R12.2.1-1 (page 2 of 2)
Radioactive Liquid Effluent Monitoring Instrumentation

INSTRUMENT	REQUIRED CHANNELS PER IINSTRUMENT	CONDITION REFERENCED FROM REQUIRED ACTION A.2 AND B.1	SURVEILLANCE REQUIREMENTS
3. Flow Rate Measurement Devices			
a. Liquid Radwaste Effluent Line	1	F	RSR 12.2.1.2 RSR 12.2.1.3 RSR 12.2.1.7
b. Cooling Pond Blowdown Pipe[(b)]	1	F	RSR 12.2.1.3 RSR 12.2.1.5 RSR 12.2.1.6

[(b)] Same as River Discharge Blowdown Pipe.

12.2 INSTRUMENTATION

12.2.2 Radioactive Gaseous Effluent Monitoring Instrumentation

REC 12.2.2 The Radioactive Gaseous Effluent Instrumentation channels in Table R12.2.2-1 shall be OPERABLE with their alarm/trip setpoints set to ensure that the limits of REC 12.4.1 are not exceeded.

APPLICABILITY: According to Table R12.2.2-1

ACTIONS

----------NOTE----------
Separate condition entry is allowed for each instrument channel.

CONDITION	REQUIRED ACTION	COMPLETION TIME
A. One or more required instrument channels inoperable due to its alarm/trip setpoint less conservative than required.	A.1 Suspend the release of radioactive gaseous effluents monitored by the instrument channel. OR A.2 Enter the Condition referenced in Table R12.2.2-1 for the instrument channel.	Immediately Immediately
B. One or more required instrument channels inoperable for reasons other than Condition A.	B.1 Enter the Condition referenced in Table R12.2.2-1 for the instrument channel.	Immediately

(continued)

ACTIONS

CONDITION	REQUIRED ACTION	COMPLETION TIME
C. As required by Required Action A.2 or B.1 and referenced in Table R12.2.2-1.	C.1 Place instrument channel in trip.	1 hour
D. As required by Required Action A.2 or B.1 and referenced in Table R12.2.2-1.	D.1 Obtain grab samples. AND D.2 Analyze grab samples for noble gas emitters. AND D.3 Restore instrument channel to OPERABLE status.	Once per 8 hours Within 24 hours following each grab sample 30 days
E. As required by Required Action A.2 or B.1 and referenced in Table R12.2.2-1.	E.1 Obtain grab samples. AND E.2 Analyze grab samples for noble gas emitters at an LLD as specified in Table R12.4.1-1. AND E.3 Restore instrument channel to OPERABLE status.	Once per 8 hours Within 24 hours following each grab sample 30 days
F. As required by Required Action A.2 or B.1 and referenced in Table R12.2.2-1.	F.1 Establish CONTINUOUS SAMPLING with auxiliary sampling equipment as required in Table R12.4.1-1. AND F.2 Restore instrument channel to OPERABLE status.	4 hours 30 days

(continued)

ACTIONS

CONDITION	REQUIRED ACTION	COMPLETION TIME
G. As required by Required Action A.2 or B.1 and referenced in Table R12.2.2-1.	G.1 Estimate flow rate. AND G.2 Restore instrument channel to OPERABLE status.	Once per 4 hours 30 days
H. As required by Required Action A.2 or B.1 and referenced in Table R12.2.2-1.	H.1 Verify offgas treatment system not bypassed. AND H.2.1 Verify at least one Instrument 1.a channel OPERABLE. OR H.2.2 Verify Required Actions for Condition D are met. AND H.3 Obtain and analyze grab samples. AND H.4 Restore instrument channel to OPERABLE status.	Immediately Immediately Immediately Once per 4 hours. 30 days
I. ----------NOTE---------- Required Action I.1 shall be completed if this Condition is entered. ---------- Required Action and associated Completion Time of Required Action D.3, E.3, F.2, or G.2 or H.4 not met.	I.1 Explain in the next Radioactive Effluent Release Report why the inoperability was not corrected within the time specified.	In accordance with Technical Specification 5.6.3.

SURVEILLANCE REQUIREMENTS

SURVEILLANCE		FREQUENCY
RSR 12.2.2.1	Perform CHANNEL CHECK.	24 hours
RSR 12.2.2.2	Perform SOURCE CHECK.	24 hours
RSR 12.2.2.3	----------NOTE---------- For Instruments 4.b and 4.c, not required to be performed until 7 days after Standby Gas Treatment is placed in operation. ---------- Perform CHANNEL CHECK.	7 days
RSR 12.2.2.4	Perform SOURCE CHECK.	31 days
RSR 12.2.2.5	Perform CHANNEL FUNCTIONAL TEST. For Instruments 3.a (log monitor only) and 1.a, the test shall also demonstrate that the control room alarm annunciates and the automatic isolation capability of the affected pathway, as applicable, under the following conditions: a. Upscale, b. Inoperative, or c. Downscale	92 days
RSR 12.2.2.6	Perform CHANNEL FUNCTIONAL TEST. The test shall also demonstrate that the instrument indicates measured levels above the alarm setpoint and that the control room alarm annunciates on a Loss of Counts condition.	92 days
RSR 12.2.2.7	Perform CHANNEL CALIBRATION	24 months

Table R12.2.2-1 (page 1 of 2)
Radioactive Gaseous Effluent Monitoring Instrumentation

INSTRUMENT[a]	APPLICABLE MODES OR OTHER SPECIFIED CONDITIONS	REQUIRED CHANNELS PER INSTRUMENT	CONDITION REFERENCED FROM REQUIRED ACTION A.2 AND B.1	SURVEILLANCE REQUIREMENTS
1. Main Condenser Offgas Treatment System Effluent Monitoring System				
a. Noble Gas Activity Monitor – Providing Alarm and Automatic Termination of Release (Post-Treat)	(b)	2	C, if only one required channel inoperable D, if both required channels inoperable	RSR 12.2.2.1 RSR 12.2.2.2 RSR 12.2.2.5 RSR 12.2.2.7[e]
2. Main Stack Monitoring System				
a. Noble Gas Activity Monitor (Low or Mid Range WRGM)	(c)	1	E	RSR 12.2.2.1 RSR 12.2.2.4 RSR 12.2.2.6 RSR 12.2.2.7[d]
b. Iodine Sampler (Grab Sampler)	(c)	1	F	RSR 12.2.2.3
c. Particulate Sampler (Grab Sampler)	(c)	1	F	RSR 12.2.2.3
d. Effluent System Flow Rate Monitor	(c)	1	G	RSR 12.2.2.1 RSR 12.2.2.5 RSR 12.2.2.7
e. Sampler Flow Rate Monitor (Low/Mid/Hi)	(c)	1	G	RSR 12.2.2.1 RSR 12.2.2.5 RSR 12.2.2.7

(Continued)

(a) Equipment Part Numbers (EPN) are provided in Table R12.2.2-2.
(b) During effluent releases via this pathway.
(c) At all times.
(d) The initial CHANNEL CALIBRATION shall be performed using one or more of the referenced radioactive standards certified by the National Institute of Standards and Technology (NIST) or using standards that have been obtained from suppliers that participate in measurement assurance activities with NIST. These standards shall permit calibrating the system over its intended range of energy and measurement range. For subsequent CHANNEL CALIBRATIONS, the initial reference radioactive standards or radioactive sources that have been related to the initial calibration shall be used.
(e) The initial CHANNEL CALIBRATION shall be performed using one or more of the reference radioactive standards certified by the National Institute of Standards and Technology (NIST) or using standards that have been obtained from suppliers that participate in measurement assurance activities with NIST. These standards shall permit calibrating the system over its intended range of energy and measurement range. For subsequent CHANNEL CALIBRATION, the initial calibration shall be used, in order to demonstrate linearity of the original calibration. This transfer calibration, combined with signal inputs, satisfies channel calibration and functional test requirements as implemented by station procedures.

Table R12.2.2-1 (page 2 of 2)
Radioactive Gaseous Effluent Monitoring Instrumentation

INSTRUMENT[a]	APPLICABLE MODES OR OTHER SPECIFIED CONDITIONS	REQUIRED CHANNELS PER INSTRUMENT	CONDITION REFERENCED FROM REQUIRED ACTION A.2 AND B.1	SURVEILLANCE REQUIREMENTS
3. Condenser Air Ejector Radioactivity Monitor (Prior to Input to Holdup System)				
a. Noble Gas Activity Monitor	(f)	1	H	RSR 12.2.2.1 RSR 12.2.2.4 RSR 12.2.2.5 RSR 12.2.2.7[d]
4. Standby Gas Treatment (SGT) Monitoring System				
a. Noble Gas Activity Monitor (Low or Mid Range WRGM)	(g)	1	E	RSR 12.2.2.1 RSR 12.2.2.4 RSR 12.2.2.6 RSR 12.2.2.7[d]
b. Iodine Sampler (Grab Sampler)	(g)	1	F	RSR 12.2.2.3
c. Particulate Sampler (Grab Sampler)	(g)	1	F	RSR 12.2.2.3
d. Effluent System Flow Rate Monitor	(g)	1	G	RSR 12.2.2.1 RSR 12.2.2.5 RSR 12.2.2.7
e. Sampler Flow Rate Monitor (Low/Mid/Hi)	(g)	1	G	RSR 12.2.2.1 RSR 12.2.2.5 RSR 12.2.2.7

(a) Equipment Part Numbers (EPN) are provided in Table R12.2.2-2.
(d) *The initial CHANNEL CALIBRATION shall be performed using one or more of the referenced radioactive standards* certified by the National Institute of Standards and Technology (NIST) or using standards that have been obtained from suppliers that participate in measurement assurance activities with NIST. These standards shall permit calibrating the system over its intended range of energy and measurement range. For subsequent CHANNEL CALIBRATIONS, the initial reference radioactive standards or radioactive sources that have been related to the initial calibration shall be used.
(f) During operation of the main condenser air ejector.
(g) During operation of SGT.

Table R12.2.2-2 (page 1 of 2)
Radioactive Gaseous Effluent Monitoring Instrumentation Applicability

INSTRUMENT	EPNS OF APPLICABLE EQUIPMENT
A. Unit 1 Applicable Instruments	
1. Main Condenser Offgas Treatment System Effluent Monitoring System	
a. Noble Gas Activity Monitor – Providing Alarm and Automatic Termination of Release	1D18-N903A, K901A, K601A, R601 1D18-N903B, K901B, K601B, R601
2. Main Stack Monitoring System	
a. Noble Gas Activity Monitor (Low or Mid Range WRGM)	0D18-N514, R517, R518 Low Range 0D18-N515, R517, R518 Mid Range
b. Iodine Sampler (Grab Sampler)	
c. Particulate Sampler (Grab Sampler)	
d. Effluent System Flow Rate Monitor	0FT-VR019, 0FY-VR019 AND 019A, 0FR-VR019, 0D18-K510, 0D18-R518
e. Sampler Flow Rate Monitor (Low/Mid/Hi)	0D18-N527, 0D18-N528, 0D18-R518 Low 0D18-N530, 0D18-N531, 0B18-R518 Mid/Hi
3. Concenser Air Ejector Radioactivity Monitor (Prior to Input to Holdup System)	
a. Noble Gas Activity Monitor	1D18-N002, K613, R604, or 1D18-N012, K600, R605
4. Standby Gas Treatment (SGT) Monitoring System	
a. Noble Gas Activity Monitor (Low/Mid Range WRGM)	0D18-N511, R515, R516 Low Range 0D18-N512, R515, R516 Mid Range
b. Iodine Sampler (Grab Sampler)	
c. Particulate Sampler (Grab Sampler)	
d. Effluent System Flow Rate Monitor	1FT-VG009, 1FY-VG009, 1FR-VG-009
e. Sampler Flow Rate Monitor (Low/Mid/Hi)	0D18-N521, 0D18-N522, 0D18-R516 Low 0D18-N524, 0D18-N525, 0B18-R516 Mid/Hi

(Continued)

Table R12.2.2-2 (page 2 of 2)
Radioactive Gaseous Effluent Monitoring Instrumentation Applicability

INSTRUMENT	EPNS OF APPLICABLE EQUIPMENT
B. Unit 2 Applicable Instruments	
1. Main Condenser Offgas Treatment System Effluent Monitoring System	
a. Noble Gas Activity Monitor – Providing Alarm and Automatic Termination of Release	2D18-N903A, K901A, K601A, R601 2D18-N903B, K901B, K601B, R601
2. Main Stack Monitoring System	
a. Noble Gas Activity Monitor (Low or Mid Range WRGM)	0D18-N514, R517, R518 Low Range 0D18-N515, R517, R518 Mid Range
b. Iodine Sampler (Grab Sampler)	
c. Particulate Sampler (Grab Sampler)	
d. Effluent System Flow Rate Monitor	0FT-VR019, 0FY-VR019 AND 019A, 0FR-VR019, 0D18-K510, 0D18-R518
e. Sampler Flow Rate Monitor (Low/Mid/Hi)	0D18-N527, 0D18-N528, 0D18-R518 Low 0D18-N530, 0D18-N531, 0B18-R518 Mid/Hi
3. Condenser Air Ejector Radioactivity Monitor (Prior to Input to Holdup System)	
a. Noble Gas Activity Monitor	2D18-N002, K613, R604, or 2D18-N012, K600, R605
4. Standby Gas Treatment (SGT) Monitoring System	
a. Noble Gas Activity Monitor (Low/Mid Range WRGM)	0D18-N511, R515, R516 Low Range 0D18-N512, R515, R516 Mid Range
b. Iodine Sampler (Grab Sampler)	
c. Particulate Sampler (Grab Sampler)	
d. Effluent System Flow Rate Monitor	2FT-VG009, 2FY-VG009, 2FR-VG-009
e. Sampler Flow Rate Monitor (Low/Mid/Hi)	0D18-N521, 0D18-N522, 0D18-R516 Low 0D18-N524, 0D18-N525, 0B18-R516 Mid/Hi

12.3 LIQUID EFFLUENTS

12.3.1 Liquid Effluent Concentration

REC 12.3.1 The concentration of radioactive material released from the site to areas at or beyond the SITE BOUNDARY shall be limited to:

a. 10 times the concentration specified in 10 CFR 20.1001-20.2402 Appendix B, Table 2, Column 2 for radionuclides other than dissolved or entrained noble gases; and

b. the values listed in Table R12.3.1-1 for total activity concentration for all dissolved or entrained noble gases.

APPLICABILITY: At all times.

ACTIONS

CONDITION	REQUIRED ACTION	COMPLETION TIME
A. Concentration of radioactive material released to areas at or beyond the SITE BOUNDARY not within limits.	A.1 Initiate action to restore the concentration to within limits.	Immediately
B. Requirements of RSR 12.3.1.4 not met.	B.1 Enter Condition A of Technical Requirements Manual Section 3.7.d.	Immediately

SURVEILLANCE REQUIREMENTS

SURVEILLANCE		FREQUENCY
RSR 12.3.1.1	Determine radioactivity content of each radioactive liquid waste batch by sampling and analysis in accordance with Table R12.3.1-2.	In accordance with the Radioactive Liquid Waste Sampling and Analysis Program.
RSR 12.3.1.2	Perform post-release analysis of samples composited from batch releases in accordance with Table R12.3.1-2.	In accordance with the Radioactive Liquid Waste Sampling and Analysis Program.
RSR 12.3.1.3	Determine radioactivity concentration of liquids discharged from continuous release points by sampling and analysis in accordance with Table R12.3.1-2.	In accordance with the Radioactive Liquid Waste Sampling and Analysis Program.

(Continued)

SURVEILLANCE REQUIREMENTS

RSR 12.3.1.4	----------NOTE---------- Not required to be performed until 7 days after the start of addition if tank(s) is empty at the beginning of the addition. ---------- Verify the quantity of radioactive material of each outside temporary tank is low enough to ensure that in the event of an uncontrolled release of the tanks contents, the resulting concentration would be less than the REC limits.	7 days when radioactive material is being added to the tank(s). <u>AND</u> Once within 7 days after each completion of addition of radioactive material to the tank(s).

Table R12.3.1-1

ALLOWABLE CONCENTRATION (AC) OF DISSOLVED OR ENTRAINED NOBLE GASES RELEASED FROM THE SITE TO UNRESTRICTED AREAS IN LIQUID WASTE

NUCLIDE	ALLOWABLE CONCENTRATION (μCi/ml)*
Kr-85m	2×10^{-4}
Kr-85	5×10^{-4}
Kr-87	4×10^{-5}
Kr-88	9×10^{-5}
Ar-41	7×10^{-5}
Xe-131m	7×10^{-4}
Xe-133m	5×10^{-4}
Xe-133	6×10^{-4}
Xe-135m	2×10^{-4}
Xe-135	2×10^{-4}

* Computed from Equation 20 of ICRP Publication 2 (1959), adjusted for infinite cloud submersion in water, and R = 0.01 rem/week, density = 1.0 g/cc and Pw/Pt = 1.0.

Table R12.3.1-2 (Page 1 of 4)

RADIOACTIVE LIQUID WASTE SAMPLING AND ANALYSIS PROGRAM

LIQUID RELEASE TYPE	SAMPLING FREQUENCY[g]	MINIMUM ANALYSIS FREQUENCY[g]	TYPE OF ACTIVITY ANALYSIS	LOWER LIMIT OF DETECTION (LLD)[a] (μCi/ml)
A. Batch Waste Release Tanks[d]	Prior to each release, Each Batch	Prior to each release, Each Batch	Principal Gamma Emitters[f]	$5x10^{-7}$
			I-131	$1x10^{-6}$
	Prior to each release, Each Batch	31 days Composite [b]	H-3	$1x10^{-5}$
			Gross Alpha	$1x10^{-7}$
	Prior to each release, Each Batch	92 days Composite [b]	Sr-89, Sr-90	$5x10^{-8}$
			Fe-55	$1x10^{-6}$
	Prior to each release, One Batch per 31 days	31 days	Dissolved & Entrained Gases (Gamma Emitters)	$1x10^{-5}$
B. Plant Continuous Releases[e] Cooling Pond Blowdown	CONTINUOUS[c]	7 days Composite [c]	I-131	$1x10^{-6}$
			Principal Gamma Emitters[f]	$5x10^{-7}$
	31 days Grab Sample	31 days	Dissolved & Entrained Gases (Gamma Emitters)	$1x10^{-5}$
	CONTINUOUS[c]	31 days Composite[c]	H-3	$1x10^{-5}$
			Gross Alpha	$1x10^{-7}$
	CONTINUOUS[c]	92 days Composite[c]	Sr-89, Sr-90	$5x10^{-8}$
			Fe-55	$1x10^{-6}$

Table R12.3.1-2 (Page 2 of 4)

RADIOACTIVE LIQUID WASTE SAMPLING AND ANALYSIS PROGRAM TABLE NOTATION

a. The LLD is the smallest concentration of radioactive material in a sample that will be detected with 95% probability with only 5% probability of falsely concluding that a blank observation represents a "real" signal.

For a particular measurement system, which may include radiochemical separation:

$$LLD = \frac{4.66 S_b}{E \cdot V \cdot 2.22x10^6 \cdot Y \cdot e^{(-\lambda \Delta t)}}$$

Where:

LLD = the a priori lower limit of detection (microcurie per unit mass or volume),

s_b = the standard deviation of the background counting rate or of the counting rate of a blank sample as appropriate (counts per minute),

E = the counting efficiency (counts per transformation),

V = the sample size (units of mass or volume),

2.22×10^6 = the number of transformations per minute per microcurie,

Y = the fractional radiochemical yield, when applicable,

λ= the radioactive decay constant for the particular radionuclide and for composite samples, and

Δt = the elapsed time between the midpoint of sample collection and the time of counting (for plant effluents, not environmental samples). For batch samples taken and analyzed prior to release, Δt is taken to be zero.

The value of s_b used in the calculation of the LLD for a detection system shall be based on the actual observed variance of the background counting rate or of the counting rate of the blank samples (as appropriate) rather than on an unverified theoretically predicted variance. Typical values of E, V, Y, and Δt shall be used in the calculation.

Alternate LLD Methodology

An alternate methodology for LLD determination follows and is similar to the above LLD equation:

$$LLD = \frac{(2.71 + 4.65\sqrt{B}) \cdot Decay}{E \cdot q \cdot b \cdot Y \cdot t \cdot (2.22x10^6)}$$

Table R12.3.1-2 (Page 3 of 4)

RADIOACTIVE LIQUID WASTE SAMPLING AND ANALYSIS PROGRAM TABLE NOTATION

Where:

B = background sum (counts)

E = counting efficiency

q = sample quantity (mass or volume)

b = abundance (if applicable)

Y= fractional radiochemical yield or collection efficiency (if applicable)

t= count time (minutes)

2.22×10^6 = number of disintegrations per minute per microcurie

$2.71 + 4.65\sqrt{B} = k^2 + (2k\sqrt{2}\sqrt{B})$, and k = 1.645

(k=value of the t statistic from the single-tailed t distribution at a significance level of 0.95 and infinite degrees of freedom. This means that the LLD result represents a 95% detection probability with a 5% probability of falsely concluding that the nuclide is present when it is not or that the nuclide is not present when it is.)

Decay = $e^{\lambda\Delta t}[\lambda RT/(1-e^{-\lambda RT})][\lambda T_d/(1-e^{-\lambda T_d})]$ if applicable

λ = radioactive decay constant (units consistent with Δt, RT and T_d)

Δt = "delta t", or the elapsed time between sample collection or the midpoint of sample collection and the time the count is started, depending on the type of sample (units consistent with λ)

RT = elapsed real time, or the duration of the sample count (units consistent with λ)

T_d = sample deposition time, or the duration of analyte collection onto the sample media (units consistent with λ)

The LLD may alternately be determined using installed radioanalytical software, if available. In addition to determining the correct number of channels over which to total the background sum, utilizing the software's ability to perform decay corrections (i.e. during sample collection, from sample collection to start of analysis, and during counting), this alternate method will result in a more accurate determination of the LLD.

It should be recognized that the LLD is defined as a before the fact limit representing the capability of a measurement system and not as an after the fact limit for a particular measurement.

Table R12.3.1-2 (Page 4 of 4)

RADIOACTIVE LIQUID WASTE SAMPLING AND ANALYSIS PROGRAM TABLE NOTATION

b. A composite sample is one in which the quantity of liquid sampled is proportional to the quantity of liquid waste discharged and in which the method of sample employed results in a specimen which is representative of the liquids released.

c. To be representative of the quantities and concentrations of radioactive materials in liquid effluents, samples shall be collected in proportion to the rate of flow of the effluent stream. Prior to analyses, all samples taken for the composite shall be thoroughly mixed in order for the composite sample to be representative of the effluent release.

d. A batch release is the discharge of liquid waste of a discrete volume. Prior to sampling for analyses, each batch shall be isolated, and then thoroughly mixed to assure representative sampling.

e. A continuous release is the discharge of liquid wastes of a non-discrete volume; e.g., from a volume of system that has an input flow during the continuous release.

f. The principal gamma emitters for which the LLD specification applies exclusively are the following radionuclides: Mn-54, Fe-59, Co-58, Co-60, Zn-65, Mo-99, Cs-134, Cs-137, Ce-141, and Ce-144. This list does not mean that only these nuclides are to be detected and reported. Other peaks that are measurable and identifiable, at the 95% confidence level, together with the above nuclides, shall also be identified and reported.

g. The provisions of RSR 12.0.2 and RSR 12.0.3 are applicable to the Radioactive Liquid Waste Sampling and Analysis Program.

12.3 LIQUID EFFLUENTS

12.3.2 Dose from Liquid Effluents

REC 12.3.2 The dose or dose commitment to a MEMBER OF THE PUBLIC from radioactive materials in liquid effluents released, from each reactor unit, from the site shall be limited to:

a. ≤ 1.5 mrem to the total body and ≤ 5.0 mrem to any organ during any calendar quarter; and

b. ≤ 3.0 mrem to the total body and ≤ 10.0 mrem to any organ during any calendar year.

APPLICABILITY: At all times.

ACTIONS

CONDITION	REQUIRED ACTION	COMPLETION TIME
A. ----------NOTE---------- Required Action A.1 shall be completed if this Condition is entered. ---------- Calculated dose not within limits.	A.1 Submit a Report, pursuant to 10CFR50, Appendix I, Section IV.A, to the NRC that identifies causes for exceeding limits, radiological impact on finished drinking water supplies at the nearest downstream drinking water source and defines actions to be taken to reduce releases of radioactive materials in liquid effluents during the remainder of the current calendar quarter and during the subsequent three calendar quarters so that the cumulative dose or dose commitment is within the limits of REC 12.3.2.b.	30 days following the end of the quarter in which the release occurred
B. Calculated dose exceeds two times (2x) the limits.	B.1 Enter Condition A of REC 12.4.7.	Immediately

SURVEILLANCE REQUIREMENTS

SURVEILLANCE		FREQUENCY
RSR 12.3.2.1	----------NOTE---------- Only required to be performed if liquid releases have occurred since the last performance of this RSR. ---------- Calculate cumulative dose contributions from liquid effluents in accordance with the ODCM.	31 days

12.3 LIQUID EFFLUENTS

12.3.3 Liquid Radwaste Treatment Systems

REC 12.3.3. The Liquid Radwaste Treatment System shall:

a. Be OPERABLE; and

b. Be used to reduce the radioactive materials in liquid wastes prior to their discharge when the projected doses due to the liquid effluent, from each reactor unit, from the site would exceed 0.06 mrem to the total body or 0.2 mrem to any organ when averaged over 31 days.

APPLICABILITY: At all times.

ACTIONS

CONDITION	REQUIRED ACTION	COMPLETION TIME
A. Liquid Radwaste Treatment System inoperable.	A.1 Restore Liquid Radwaste Treatment System to OPERABLE status.	31 days
B. ----------NOTE---------- Required Action B.1 shall be completed if this Condition is entered. ---------- Untreated liquid waste release in progress. <u>AND</u> Projected dose not within limits.	B.1 Submit a report to the NRC that includes inoperable equipment or subsystem identification and reason, action taken to restore the inoperable equipment to OPERABLE status, and a summary description of the action(s) taken to prevent recurrence.	30 days
C. ----------NOTE---------- Required Action C.1 shall be completed if this Condition is entered. ---------- Required Action and Associated Completion time of Condition A not met.	C.1 Submit a report to the NRC that includes inoperable equipment or subsystem identification and reason, action taken to restore the inoperable equipment to OPERABLE status, and a summary description of the action(s) taken to prevent recurrence.	30 days

SURVEILLANCE REQUIREMENTS

	SURVEILLANCE	FREQUENCY
RSR 12.3.3.1	----------NOTE---------- Only required to be performed if liquid releases are planned and RSR has not been performed in the last 38 days 18 hours. ---------- Determine projected doses due to liquid releases in accordance with the ODCM methods.	31 days
RSR 12.3.3.2	----------NOTE---------- Not required to be performed if Liquid Radwaste Treatment System has been used to process radioactive liquid effluents in the last 115 days. ---------- Operate the Liquid Radwaste Treatment System equipment for at least 30 minutes.	92 days if a portable (vendor supplied) waste treatment system is being used. <u>AND</u> 180 days if a portable (vendor-supplied) waste treatment system is not being used.

12.4 GASEOUS EFFLUENTS AND TOTAL DOSE

12.4.1 Gaseous Effluent Dose Rates

REC 12.4.1 The dose rate at or beyond the SITE BOUNDARY due to radioactive materials in gaseous effluents released from the site shall be limited to the following:

a. For noble gases, ≤ 500 mrem/year to the total body and ≤ 3000 mrem/year to the skin; and

b. For iodine-131, iodine-133, tritium, and all radionuclides in particulate form with half-lives > 8 days, ≤ 1500 mrem/year to any organ via the inhalation pathway.

APPLICABILITY: At all times.

ACTIONS

CONDITION	REQUIRED ACTION	COMPLETION TIME
A. Dose rate not within limits.	A.1 Initiate action to decrease release rates to maintain dose rates within limits.	Immediately

SURVEILLANCE REQUIREMENTS

SURVEILLANCE		FREQUENCY
RSR 12.4.1.1	Verify the dose rates due to noble gases, iodine-131, iodine-133, tritium, and all radionuclides in particulate form with half lives > 8 days in gaseous effluents is within limits utilizing the methodology and parameters of the ODCM limits by obtaining and analyzing representative samples in accordance with Table R12.4.1-1.	In accordance with the Radioactive Gaseous Waste Sampling and Analysis Program

Table R12.4.1-1 (Page 1 of 4)

RADIOACTIVE GASEOUS WASTE SAMPLING AND ANALYSIS PROGRAM

GASEOUS RELEASE TYPE	SAMPLING FREQUENCY[i]	MINIMUM ANALYSIS FREQUENCY[i]	TYPE OF ACTIVITY ANALYSIS	LOWER LIMIT OF DETECTION (LLD) (µCi/ml)[a]
A. Containment Vent and Purge System[h]	Prior to each release Each Purge[b] Grab Sample	Prior to each release Each Purge[b]	Principal Gamma Emitters[g]	$1x10^{-4}$
			H-3	$1x10^{-6}$
B. Main Vent Stack	31 days[b] Grab Sample	31 days[b]	Principal Gamma Emitters[g]	$1x10^{-4}$
	7 days[b,e] Grab Sample	7 days[b,e]	H-3	$1x10^{-6}$
C. Standby Gas Treatment System	24 hours[c] Grab Sample	24 hours[c]	Principal Gamma Emitters[g]	$1x10^{-4}$
D. Main Vent Stack And Standby Gas Treatment System[c]	CONTINUOUS[f]	7 days[d] Charcoal Sample	I-131	$1x10^{-12}$
			I-133	$1x10^{-10}$
	CONTINUOUS[f]	7 days[d] Particulate Sample	Principal Gamma Emitters[g] (I-131, Others)	$1x10^{-11}$
	CONTINUOUS[f]	31 days Composite Particulate Sample	Gross Alpha	$1x10^{-11}$
	CONTINUOUS[f]	92 days Composite Particulate Sample	Sr-89,Sr-90	$1x10^{-11}$
	CONTINUOUS[f]	Noble Gas Monitor	Noble Gases, Gross Beta or Gamma	$1x10^{-6}$

Table R12.4.1-1 (Page 2 of 4)

RADIOACTIVE GASEOUS WASTE SAMPLING AND ANALYSIS PROGRAM TABLE NOTATION

a. The LLD is the smallest concentration of radioactive material in a sample that will be detected with 95% probability with 5% probability of falsely concluding that a blank observation represents a "real" signal.

For a particular measurement system (which may include radiochemical separation):

$$LLD = \frac{4.66 S_b}{E \cdot V \cdot 2.22x10^6 \cdot Y \cdot e^{(-\lambda \Delta t)}}$$

Where:

LLD	is the "a priori" lower limit of detection as defined above (as microcurie per unit mass or volume),
s_b	is the standard deviation of the background counting rate or of the counting rate of a blank sample as appropriate (as counts per minute),
E	is the counting efficiency (as counts per transformation),
V	is the sample size (in units of mass or volume),
$2.22x10^6$	is the number of transformations per minute per microcurie,
Y	is the fractional radiochemical yield (when applicable),
λ	is the radioactive decay constant for the particular radionuclide, and
Δt	is the elapsed time between midpoint of sample collection and time of counting (for plant effluents, not environmental samples).

The value of s_b used in the calculation of the LLD for a detection system shall be based on the actual observed variance of the background counting rate or of the counting rate of the blank samples (as appropriate) rather than on an unverified theoretically predicted variance. Typical values of E, V, Y, and Δt shall be used in the calculation.

Alternate LLD Methodology

An alternate methodology for LLD determination follows and is similar to the above LLD equation:

$$LLD = \frac{(2.71 + 4.65\sqrt{B}) \cdot Decay}{E \cdot q \cdot b \cdot Y \cdot t \cdot (2.22x10^6)}$$

Table R12.4.1-1 (Page 3 of 4)

RADIOACTIVE GASEOUS WASTE SAMPLING AND ANALYSIS PROGRAM TABLE NOTATION

Where:

B	= background sum (counts)
E	= counting efficiency
q	= sample quantity (mass or volume)
b	= abundance (if applicable)
Y	= fractional radiochemical yield or collection efficiency (if applicable)
t	= count time (minutes)
2.22×10^6	= number of disintegrations per minute per microcurie
$2.71 + 4.65\sqrt{B}$	$= k^2 + (2k\sqrt{2}\sqrt{B})$, and $k = 1.645$

(k=value of the t statistic from the single-tailed t distribution at a significance level of 0.95 and infinite degrees of freedom. This means that the LLD result represents a 95% detection probability with a 5% probability of falsely concluding that the nuclide is present when it is not or that the nuclide is not present when it is.)

Decay	$= e^{\lambda\Delta t}[\lambda RT/(1-e^{-\lambda RT})][\lambda T_d/(1-e^{-\lambda T_d})]$ if applicable
λ	= radioactive decay constant (units consistent with Δt, RT and T_d)
Δt	= "delta t", or the elapsed time between sample collection or the midpoint of sample collection and the time the count is started, depending on the type of sample (units consistent with λ)
RT	= elapsed real time, or the duration of the sample count (units consistent with λ)
T_d	= sample deposition time, or the duration of analyte collection onto the sample media (units consistent with λ)

The LLD may alternately be determined using installed radioanalytical software, if available. In addition to determining the correct number of channels over which to total the background sum, utilizing the software's ability to perform decay corrections (i.e. during sample collection, from sample collection to start of analysis, and during counting), this alternate method will result in a more accurate determination of the LLD.

It should be recognized that the LLD is defined as a before the fact limit representing the capability of a measurement system and not as an after the fact limit for a particular measurement.

b. Sampling and analyses shall also be performed following shutdown, startup, or a thermal power change exceeding 20 percent of RATED THERMAL POWER in 1 hour unless (1) analysis shows that the dose equivalent I-131 concentration in the primary coolant has not increased more than a factor of 5, and (2) the noble gas activity monitor shows that effluent activity has not increased by more than a factor of 3.

Table R12.4.1-1 (Page 4 of 4)

RADIOACTIVE GASEOUS WASTE SAMPLING AND ANALYSIS PROGRAM TABLE NOTATION

c. Whenever there is flow through the SGT. (If SGT is run more than 10 minutes in a 24-hour period then it must be run a minimum of 5 hours. The 5-hour run is required to meet the sample requirements for iodine and particulates.) When SGT equipment is started and shutdown, ensure noble gas iodine and particulate samples are taken.

d. Samples shall be changed at least once per 7 days and the analyses completed within 48 hours after removal from the sampler. Sampling shall also be performed within 24 hours following each shutdown, startup, or thermal power level change exceeding 20% of RATED THERMAL POWER in one hour. This requirement does not apply if 1) analysis shows that the dose equivalent I-131 concentration in the primary coolant has not increased by more than a factor of 5, and 2) the noble gas activity monitor shows that effluent activity has not increased by more than a factor of 3. When samples collected for 24 hours are analyzed, the corresponding LLDs may be increased by a factor of 10.

e. Tritium grab samples shall be taken at least once per 7 days from the plant vent to determine tritium releases in the ventilation exhaust from the spent fuel pool area whenever spent fuel is in the spent fuel pool If there is no spent fuel in the fuel pool, sampling and analysis of tritium grab samples shall be performed at least once per 31 days.

f. The ratio of the sample flow rate to the sampled stream flow rate shall be known for the time period covered by each dose or dose rate calculation made in accordance with RECs 12.4.1, 12.4.2 and 12.4.3.

g. The principal gamma emitters for which the LLD specification applies include the following radionuclides: Kr-87, Kr-88, Xe-133, Xe-133m, Xe-135, and Xe-138 for gaseous emissions and Mn-54, Fe-59, Co-58, Co-60, Zn-65, Mo-99, Cs-134, Cs-137, Ce-141 and Ce-144 for particulate emissions. This list does not mean that only these nuclides are to be detected and reported. Other peaks that are measurable and identifiable, at the 95% confidence level, together with the above nuclides, shall also be identified and reported.

h. The drywell tritium and noble gas sample results are valid for 30 hours from sample time if 1) the drywell radioactivity monitors have not indicated an increase in airborne or gaseous radioactivity, <u>and</u> 2) the drywell equipment and floor drain sump pumps run times have not indicated an increase in leakage in the drywell since the sample was taken, <u>and</u> 3) conditions are such that activity can be calculated for the radionuclide concentration at the time of the release.

If there is any reason to suspect that gaseous radioactivity levels have changed in the drywell that would compromise the calculated, or estimated, radionuclide concentrations at the time of the release, since the last sample (30 hours), a new sample and analyses should be requested prior to starting a drywell purge to meet the intent of providing current analyses to reflect actual activity released to the environment. If a known steady state leakage condition exists in the drywell it is possible to calculate a safe and accurate release package. Final release quantification will be based on calculated radionuclide concentrations at the time of the actual release.

If the drywell is PURGED in accordance with the ODCM definition, both noble gas and tritium analyses must be completed before the purge begins. If the drywell is simply VENTING in accordance with the ODCM definition, no sample is required before venting.

i. The provisions of RSR 12.0.2 and RSR 12.0.3 are applicable to the Radioactive Gaseous Waste Sampling and Analysis Program.

12.4 GASEOUS EFFLUENTS AND TOTAL DOSE

12.4.2 Dose from Noble Gases

REC 12.4.2 The air dose due to noble gases in gaseous effluents released from each reactor unit from the site shall be limited to the following:

a. For gamma radiation, ≤ 5 mrad during any calendar quarter and ≤ 10 mrad during any calendar year; and

b. For beta radiation, ≤ 10 mrad during any calendar quarter and ≤ 20 mrad during any calendar year.

APPLICABILITY: At all times.

ACTIONS

CONDITION	REQUIRED ACTION	COMPLETION TIME
A. ----------NOTE---------- Required Action A.1 shall be completed if this Condition is entered. ---------- Calculated air dose not within limits.	A.1 Submit a report to the NRC, pursuant to 10CFR50 Appendix I Section IV.A, that identifies causes for exceeding limits, defines corrective actions to be taken to reduce the releases, and proposed corrective actions to assure that subsequent releases are within limits.	30 days following the end of the quarter in which the release occurred
B. Calculated air dose exceeds two times (2x) the limits.	B.1 Enter Condition A of REC 12.4.7.	Immediately

SURVEILLANCE REQUIREMENTS

SURVEILLANCE	FREQUENCY
RSR 12.4.2.1 Determine cumulative dose contributions for the current calendar quarter and current calendar year in accordance with the ODCM.	31 days

12.4 GASEOUS EFFLUENTS AND TOTAL DOSE

12.4.3 Dose From Iodine -131, Iodine -133, Tritium, and Radioactive Materials in Particulate Form

REC 12.4.3 The dose to a MEMBER OF THE PUBLIC from iodine-131, iodine-133, tritium and all radionuclides in particulate form, with half-lives > 8 days, in gaseous effluents released from each reactor unit, to areas at and beyond the SITE BOUNDARY shall be limited to:

a. ≤ 7.5 mrem to any organ during any calendar quarter; and

b. ≤ 15 mrem to any organ during any calendar year.

APPLICABILITY: At all times.

ACTIONS

CONDITION	REQUIRED ACTION	COMPLETION TIME
A. ----------NOTE---------- Required Action A.1 shall be completed if this Condition is entered. ---------- Calculated dose not within limits.	A.1 Submit a report to the NRC, pursuant to 10CFR50 Appendix I Section IV.A, that identifies causes for exceeding limits, defines corrective actions to be taken to reduce the releases, and proposed corrective actions to assure that subsequent releases are within limits.	30 days following the end of the quarter in which the release occurred
B. Calculated dose exceeds two times (2x) the limits.	B.1 Enter Condition A of REC 12.4.7.	Immediately

SURVEILLANCE REQUIREMENTS

SURVEILLANCE		FREQUENCY
RSR 12.4.3.1	Determine cumulative dose contributions for the current calendar quarter and calendar year for iodine-131, iodine-133, tritium, and radionuclides in particulate form with half-lives greater than 8 days in accordance with the methodology and parameters in the ODCM.	31 days

12.4 GASEOUS EFFLUENTS AND TOTAL DOSE

12.4.4 GASEOUS RADWASTE TREATMENT SYSTEM

REC 12.4.4 The GASEOUS RADWASTE (OFF-GAS) TREATMENT SYSTEM shall be OPERABLE and in operation.

APPLICABILITY: During Main Condenser Air Ejector system operation.

ACTIONS

CONDITION	REQUIRED ACTION	COMPLETION TIME
A. GASEOUS RADWASTE TREATMENT SYSTEM inoperable. OR GASEOUS RADWASTE TREATMENT SYSTEM not in operation.	A.1 Restore system to OPERABLE status. AND A.2 Place system in operation.	7 days
B. ----------NOTE---------- Required Action B.1 shall be completed if this Condition is entered. ---------- Required action and Associated Completion Time not met.	B.1 Submit a report to the NRC that includes defective equipment or subsystem identification and inoperability cause, actions taken to restore the inoperable equipment to OPERABLE status, and summary description of actions taken to prevent a recurrence.	30 days

SURVEILLANCE REQUIREMENTS

SURVEILLANCE		FREQUENCY
RSR 12.4.4.1	Verify the GASEOUS RADWASTE TREATMENT SYSTEM is in operation.	7 days

12.4 GASEOUS EFFLUENTS AND TOTAL DOSE

12.4.5 VENTILATION EXHAUST TREATMENT SYSTEM

REC 12.4.5 The appropriate portions of the VENTILATION EXHAUST TREATMENT SYSTEM shall;

a. BE OPERABLE; and

b. be used to reduce radioactive materials in gaseous waste prior to their discharge when the projected doses from each reactor unit from the site would exceed 0.3 mrem to any organ, when average over 31 days.

APPLICABILITY: At all times.

----------NOTE----------
Separate Condition entry is allowed for each VENTILATION EXHAUST TREATMENT system pathway.

ACTIONS

CONDITION	REQUIRED ACTION	COMPLETION TIME
A. One or more required VENTILATION EXHAUST TREATMENT SYSTEMS inoperable.	A.1 Restore system to OPERABLE status.	31 days
B. ----------NOTE---------- Required Action B.1 shall be completed if this condition is entered. ---------- Untreated gaseous waste release in progress. <u>AND</u> Projected dose not within limits.	B.1 Submit a report to the NRC that includes inoperable equipment or subsystem identification and reason for inoperability, actions taken to restore the inoperable equipment to OPERABLE status, and summary description of actions taken to prevent a recurrence.	30 days

(continued)

ACTIONS

CONDITION	REQUIRED ACTION	COMPLETION TIME
C. ----------NOTE---------- Required Action C.1 shall be completed if this Condition is entered. ---------- Required Action and associated Completion Time of Condition A not met.	C.1 Submit a report to the NRC that includes inoperable equipment or subsystem identification and reason for inoperability, actions taken to restore the inoperable equipment to OPERABLE status, and summary description of actions taken to prevent a recurrence.	30 days

SURVEILLANCE REQUIREMENTS

SURVEILLANCE		FREQUENCY
RSR 12.4.5.1	Project doses due to gaseous releases from the site in accordance with the ODCM.	31 days
RSR 12.4.5.2	----------NOTE---------- Not required to be performed if the VENTILATION EXHAUST TREATMENT SYSTEM has been used to process gaseous effluents in the last 115 days. ---------- OPERATE each required VENTILATION EXHAUST TREATMENT SYSTEM equipment for at least 30 minutes.	92 days

12.4 GASEOUS EFFLUENTS AND TOTAL DOSE

12.4.6 MARK II Containment

REC 12.4.6 VENTING or PURGING of the containment drywell shall be:

a. through the Primary Containment Vent and Purge System, or

b. through the Standby Gas Treatment (SGT) System.

APPLICABILITY: During drywell VENTING or PURGING.

ACTIONS

CONDITION	REQUIRED ACTION	COMPLETION TIME
A. Above requirements not met.	A.1 Suspend all drywell VENTING and PURGING.	Immediately

SURVEILLANCE REQUIREMENTS

SURVEILLANCE		FREQUENCY
RSR 12.4.6.1	Verify containment drywell is aligned for VENTING or PURGING through the Primary Containment Vent and Purge System or the SGT System.	12 hours
RSR 12.4.6.2	----------NOTE---------- Only required to be met when in MODES 1, 2, or 3. ---------- Verify: a. Both SGT trains are OPERABLE, and b. Only one of the SGT System trains to be used for PURGING.	Prior to PURGING through the SGT System.

12.4 GASEOUS EFFLUENTS AND TOTAL DOSE

12.4.7 Total Dose

REC 12.4.7 The dose or dose commitment to any MEMBER OF THE PUBLIC due to releases of radioactivity and radiation from all uranium fuel cycle sources over 12 consecutive months shall be limited to:

a. ≤ 25 mrem to the total body; and

b. ≤ 75 mrem to the thyroid; and

c. ≤ 25 mrem to any other organ.

APPLICABILITY: At all times.

ACTIONS

CONDITION	REQUIRED ACTION	COMPLETION TIME
A. ----------NOTE---------- Required Action A.1 and A.2 shall be completed if this Condition is entered. ---------- As required by Required Action B.1 of REC 12.3.2, 12.4.2, or 12.4.3. OR Calculated Total Dose not within limits.	A.1 Submit a report to the NRC (Director, Nuclear Reactor Regulation) that defines the corrective action to be taken to reduce subsequent releases to prevent recurrence of exceeding the limits to include estimates of radiation exposure to a MEMBER OF THE PUBLIC from uranium fuel cycle sources, including all effluent pathways and direct radiation, for a 12 consecutive month period that includes the release(s) covered by this report. AND	30 days (continued)

ACTIONS

CONDITION	REQUIRED ACTION	COMPLETION TIME
A. (continued)	A.2 ----------NOTE---------- Only applicable if the release condition resulting in violation of 40 CFR 190 has not been corrected. ---------- Submit a request for a variance in accordance with 40 CFR 190, including the specified information of 40 CFR 190.11.	30 days

SURVEILLANCE REQUIREMENTS

SURVEILLANCE	FREQUENCY
RSR 12.4.7.1 Determine cumulative dose contributions from direct radiation and liquid and gaseous effluents in accordance with the ODCM.	31 days

12.4 GASEOUS EFFLUENTS AND TOTAL DOSE

12.4.8 Main Condenser

REC 12.4.8 The release rate of the sum of the activities from the noble gases measured prior to the holdup line shall be limited to $\leq 3.4 \times 10^5$ µCi/sec after 30 minutes decay.

APPLICABILITY: MODE 1,
MODES 2 and 3 with any steam line not isolated and steam jet air ejectors (SJAE) in operation.

ACTIONS

CONDITION	REQUIRED ACTION	COMPLETION TIME
A. Release rate of the sum of the activities from noble gases prior to the holdup line not within the limits.	A.1 Restore the release rate to within limit.	72 hours
B. Required Action and associated Completion Time not met.	B.1 Isolate all main steam lines.	12 hours
	OR	
	B.2 Isolate the SJAE.	12 hours
	OR	
	B.3.1 MODE 3	12 hours
	AND	
	B.3.2 MODE 4	36 hours

SURVEILLANCE REQUIREMENTS

SURVEILLANCE		FREQUENCY
RSR 12.4.8.1	Monitor the noble gas radioactivity rate prior to the holdup line in accordance with the ODCM and Table R12.2.2-1	CONTINUOUSLY
RSR 12.4.8.2	----------NOTE---------- Not required to be performed until 31 days after any Main Steam line not isolated and SJAE in operation. ---------- Verify the release rate of the sum of the activities from noble gases prior to the holdup line is within limits by performing an isotopic analysis of a representative sample of gases taken prior to the holdup line.	Once within 4 hours after a ≥50% increase in the nominal steady state fission gas release from the primary coolant, as indicated by the off gas pre-treatment Noble Gas Activity Monitor, after factoring out increases due to changes in THERMAL POWER level AND 31 days

12.4 GASEOUS EFFLUENTS AND TOTAL DOSE

12.4.9 Dose Limits for MEMBERS OF THE PUBLIC

REC 12.4.9 Operations shall be conducted such that:

a. Total Effective Dose Equivalent (TEDE) to individual MEMBERS OF THE PUBLIC does not exceed 100 mrem/year; and

b. The dose in any unrestricted area from external sources does not exceed 2 mrem in any one hour.

APPLICABILITY: At all times.

ACTIONS

CONDITION	REQUIRED ACTION	COMPLETION TIME
A. ----------NOTE---------- Required Action A.1 shall be completed if this Condition is entered. ---------- Dose limit of REC Item a. exceeded.	A.1 Submit a report to the NRC in accordance with 10 CFR 20.2203.	30 days
B. ----------NOTE---------- Required Action B.1 shall be completed if this Condition is entered. ---------- Dose limit of REC Item b. exceeded.	B.1 Submit a report to the NRC in accordance with 10 CFR 20.2203.	30 days

SURVEILLANCE REQUIREMENTS

SURVEILLANCE		FREQUENCY
RSR 12.4.9.1	Calculate the TEDE to individual MEMBERS OF THE PUBLIC in accordance with the ODCM.	12 months
RSR 12.4.9.2	Determine and/or evaluate direct radiation exposures in unrestricted areas.	12 months

12.5 RADIOLOGICAL ENVIRONMENTAL MONITORING PROGRAM

12.5.1 Radiological Environmental Monitoring Program (REMP)

REC 12.5.1 The REMP shall be conducted as specified in Table R12.5.1-1.

APPLICABILITY: At all times.

ACTIONS

CONDITION	REQUIRED ACTION	COMPLETION TIME
A. ----------NOTE---------- Required Action A.2 shall be completed if this Condition is entered. ---------- Sample type or location(s) required by Table R12.5.1-1 permanently unavailable.	A.1 Initiate action to identify suitable, alternative sampling media and/or specific locations for obtaining replacement samples for the pathway of interest and add them to the REMP. Delete locations from which samples are unavailable. AND A.2 Prepare and submit a controlled version of the ODCM, in the next Annual Radiological Environmental Operating Report (REOR) including revised figures and tables reflecting the new location(s) with supporting information identifying the sample unavailability cause and justification of the new sampling location(s).	Immediately In accordance with Technical Specification 5.6.2

(continued)

ACTIONS

CONDITION	REQUIRED ACTION	COMPLETION TIME
B. ----------NOTE---------- Required Action B.1 shall be completed if this Condition is entered. ---------- Level of radioactivity as the result of plant effluents in an environmental sampling medium at a specified location exceeds the reporting levels of Table R12.5.1-2 when averaged over any calendar quarter.	B.1 Submit a report to the NRC that identifies the cause(s) for exceeding the limits and defines the corrective actions to be taken to reduce radioactive effluents so that the potential annual dose to a MEMBER OF THE PUBLIC is less than the calendar year reporting level of REC 12.3.2, 12.4.2 or 12.4.3. The methodology and parameters used to estimate the potential annual dose to a MEMBER OF THE PUBLIC shall be indicated in this report.	30 days
C. ----------NOTE---------- Required Action C.1 shall be completed if this Condition is entered. ---------- More than one radionuclide in Table R12.5.1-2 detected in the sampling medium. AND $\frac{C_1}{RL_1} + \frac{C_2}{RL_2} + \ldots \geq 1.0$ where; C = concentration RL = reporting level.	C.1 Submit a report to the NRC that identifies the cause(s) for exceeding the limits and defines the corrective actions to be taken to reduce radioactive effluents so that the potential annual dose to a MEMBER OF THE PUBLIC is less than the calendar year reporting level of REC 12.3.2, 12.4.2 or 12.4.3. The methodology and parameters used to estimate the potential annual dose to a MEMBER OF THE PUBLIC shall be indicated in this report.	30 days

(continued)

ACTIONS

CONDITION	REQUIRED ACTION	COMPLETION TIME
D. ----------NOTE---------- Required Action D.1 and D.2 shall be completed if this Condition is entered. ---------- Radionuclides other than those in Table R12.5.1-2 are detected. AND The potential annual dose to a MEMBER OF THE PUBLIC from all radionuclides is greater than or equal to the calendar year limits of REC 12.3.2, 12.4.2, or 12.4.3.	D.1 ----------NOTE---------- Only required when the measured levels of radioactivity are the result of plant effluents. ---------- Submit a report to the NRC that identifies the cause(s) for exceeding the limits and defines the corrective actions to be taken to reduce radioactive effluents so that the potential annual dose to a MEMBER OF THE PUBLIC is less than the calendar year reporting level. The methodology and parameters used to estimate the potential annual dose to a MEMBER OF THE PUBLIC shall be indicated in this report. AND D.2 ----------NOTE---------- Only required when the radionuclides detected are not the result of plant effluents. ---------- Describe the condition in the next Annual REOR.	30 days In accordance with Technical Specification 5.6.2.

(continued)

ACTIONS

CONDITION	REQUIRED COMPENSATORY MEASURE	COMPLETION TIME
E. ----------NOTE---------- Required Action E.1 shall be completed if this Condition is entered. ---------- RSR 12.5.1.1 not met.	E.1 Prepare and submit to the NRC, in the next Annual REOR, a description of the reasons for not conducting the program as required and the plans for preventing a recurrence.	In accordance with Technical Specification 5.6.2.

SURVEILLANCE REQUIREMENTS

SURVEILLANCE		FREQUENCY
RSR 12.5.1.1	----------NOTES---------- 1. Deviations to the sampling schedule for the following reasons may occur and the RSR still be considered met provided the deviations are described in the next Annual REOR: a. specimens are unobtainable due to hazardous conditions, seasonal unavailability, or malfunction of sampling equipment, or b. a person or business who participates in the program goes out of business or can no longer provide samples, or c. a contractor omission which is corrected as soon as discovered. 2. Malfunctioning equipment shall be corrected/replaced and replacement suppliers shall be found, as applicable, as soon as practicable. ----------	
	Collect and analyze samples in accordance with Table R12.5.1-1 and the ODCM to the detection capabilities required by Table R12.5.1-3.	In accordance with the Radiological Environmental Monitoring Program

Table R12.5.1-1 (Page 1 of 5)

RADIOLOGICAL ENVIRONMENTAL MONITORING PROGRAM

EXPOSURE PATHWAY AND/ OR SAMPLE	NUMBER OF REPRESENTATIVE SAMPLES AND SAMPLE LOCATIONS[1]	SAMPLING AND COLLECTION FREQUENCY[11]	TYPE AND FREQUENCY OF ANALYSIS[11]
1. Airborne Radioiodine and Particulates	Samples from a total of eight locations: a. Indicator- Near Field Four samples from locations within 4.0 km (2.5 mi) in different sectors. b. Indicator- Far Field Four additional locations within 4.0 to 10 km (2.5 to 6.2 mi) in different sectors. c. Control One sample from a control location within 10 to 30 km (6.2 to 18.6 mi).	CONTINUOUS sampler operation with particulate sample collection once per 7 days, or more frequently if required due to dust loading, and radioiodine canister collection once per 14 days.	Radioiodine Canister: I-131 analysis once per 14 days on near field samples and control[2] samples. Particulate Sampler: Gross beta analysis following once per 7 day filter change[3] and gamma isotopic analysis[4] once per 92 days on composite filters by location on near field and control[2] samples.

(continued)

Table R12.5.1-1 (Page 2 of 5)

RADIOLOGICAL ENVIRONMENTAL MONITORING PROGRAM

EXPOSURE PATHWAY AND/ OR SAMPLE	NUMBER OF REPRESENTATIVE SAMPLES AND SAMPLE LOCATIONS[1]	SAMPLING AND COLLECTION FREQUENCY[11]	TYPE AND FREQUENCY OF ANALYSIS[11]
2. Direct Radiation[5]	Forty routine monitoring stations, either with a thermoluminescent dosimeter (TLD) or with one instrument for measuring dose rate continuously, placed as follows: a. Indicator- Inner Ring (100 Series TLD) One in each meteorological sector, in the general area of the SITE BOUNDARY (within 0.1 to 2.0 miles; 0.2 to 3.2 km); b. Indicator- Outer Ring (200 Series TLD) One in each meteorological sector, within 4.8 to 10 km (3 to 6.2 mi); c. Other (300 Series TLD) One at each Airborne location given in part 1.a. and 1.b. The balance of the TLDs to be placed at special interest locations beyond the Restricted Area where either a MEMBER OF THE PUBLIC or Exelon Nuclear employees have routine access. d. Control One at each airborne control location given in part 1.c.	92 days	Gamma dose on each TLD once per 92 days.

(continued)

Table R12.5.1-1 (Page 3 of 5)

RADIOLOGICAL ENVIRONMENTAL MONITORING PROGRAM

EXPOSURE PATHWAY AND/ OR SAMPLE	NUMBER OF REPRESENTATIVE SAMPLES AND SAMPLE LOCATIONS[1]	SAMPLING AND COLLECTION FREQUENCY[11]	TYPE AND FREQUENCY OF ANALYSIS[11]
3. Waterborne a. Ground/ Well	a. Indicator Samples from two sources only if likely to be affected.[6]	92 days	Gamma isotopic[4] and tritium analysis once per 92 days.
b. Drinking[7]	a. Indicator One Sample from each community drinking water supply that could be affected by the station discharge within 10 km (6.2 mi) downstream of discharge.	Grab samples once per 7 days.	Gross beta and gamma isotopic analyses[4] on once per 31 day composite; tritium analysis on once per 92 day composite. I-131 on each composite when calculated dose for water consumption > 1 mrem/year.
c. Surface Water[7]	If no community water supply (Drinking Water) exists within 10 km downstream of discharge then surface water sampling shall be performed. a. Indicator One sample downstream	Grab samples once per 7 days.	Gross beta and gamma isotopic analyses[4] on once per 31 day composite; tritium analysis on once per 92 day composite.
d. Control Sample[7]	a. Control One surface sample upstream of discharge.	Grab samples once per 7 days.	Gross beta and gamma isotopic analyses[4] on once per 31 day composite; tritium analysis on once per 92 day composite.
e. Sediment	a. Indicator At least one sample from downstream[7] area within 10 km (6.2 mi).	184 days	Gamma isotopic analysis[4] once per 184 days.

(continued)

Table R12.5.1-1 (Page 4 of 5)
RADIOLOGICAL ENVIRONMENTAL MONITORING PROGRAM

EXPOSURE PATHWAY AND/ OR SAMPLE	NUMBER OF REPRESENTATIVE SAMPLES AND SAMPLE LOCATIONS[1]	SAMPLING AND COLLECTION FREQUENCY[11]	TYPE AND FREQUENCY OF ANALYSIS[11]
4. Ingestion a. Milk [8]	a. Indicator Samples from milking animals from a maximum of three locations within 10 km (6.2 mi) distance. b. Control One sample from milking animals at a control location within 10 to 30 km (6.2 to 18.6 mi).	Once per 14 days when animals are on pasture (May through October), once per 31 days at other times (November through April).	Gamma isotopic[4] and I-131[9] analysis on each sample.
b. Fish	a. Indicator Representative samples of commercially and recreationally important species in discharge area, and representative samples from the LaSalle Lake. b. Control Representative samples of commercially and recreationally important species in control locations upstream of discharge.	Twice per 12 months.	Gamma isotopic analysis[4] on edible portions
c. Food Products	a. Indicator Two representative samples from the principal food pathways grown in each of four major quadrants within 10 km (6.2 mi), if available: At least one root vegetable sample[10] At least one broad leaf vegetable (or vegetation)[10] b. Control Two representative samples similar to indicator samples grown within 15 to 30 km (9.3 to 18.6 mi).	12 months	Gamma isotopic[4] and I-131 analysis on each sample.

Table R12.5.1-1 (Page 5 of 5)

RADIOLOGICAL ENVIRONMENTAL MONITORING PROGRAM

TABLE NOTATIONS

(1) Specific parameters of distance and direction from the centerline of the midpoint of the two units and additional description where pertinent, shall be provided for each and every sample location in Table R12.5.1-1, except for vegetation. For vegetation, due to location variability year to year, the parameters of distance and direction shall be provided in the Annual Environmental Operating Report.

(2) Far field samples are analyzed when the respective near field sample results are inconsistent with previous measurements and radioactivity is confirmed as having its origin in airborne effluents from the station, or at the discretion of the ODCM Specialist.

(3) Airborne particulate sample filters shall be analyzed for gross beta radioactivity 24 hours or more after sampling to allow for radon and thoron daughter decay. If gross beta activity in air particulate samples is greater than 10 times the yearly mean of control samples, gamma isotopic analysis shall be performed on the individual samples.

(4) Gamma isotopic analysis means the identification and quantification of gamma emitting radionuclides that may be attributable to the effluents from the station.

(5) One or more instruments, such as a pressurized ion chamber, for measuring and recording dose rate continuously may be used in place of, or in addition to, integrating dosimeters. Film badges shall not be used as dosimeters for measuring direct radiation. The 40 locations is not an absolute number. The number of direct radiation monitoring stations may be reduced according to geographical limitations; e.g., if a station is adjacent to a lake, some sectors may be over water thereby reducing the number of dosimeters that could be placed at the indicated distances. The frequency of analysis or readout for TLD systems will depend upon the characteristics of the specific system used and should be selected to obtain optimum dose information with minimal fading.

(6) Groundwater samples shall be taken when this source is tapped for drinking or irrigation purposes in areas where the hydraulic gradient or recharge properties are suitable for contamination.

(7) The "downstream" sample shall be taken in an area beyond but near the mixing zone. The "upstream sample" shall be taken at a distance beyond significant influence of the discharge. Upstream samples in an estuary must be taken far enough upstream to be beyond the station influence.

(8) If milking animals are not found in the designated indicator locations, or if the owners decline to participate in the REMP, all milk sampling may be discontinued.

(9) I-131 analysis means the analytical separation and counting procedure are specific for this radionuclide.

(10) One sample shall consist of a volume/weight of sample large enough to fill contractor specified container.

(11) The provisions of RSR 12.0.2 and RSR 12.0.3 are not applicable to the REMP.

Table R12.5.1-2

REPORTING LEVELS FOR RADIOACTIVITY CONCENTRATIONS IN ENVIRONMENTAL SAMPLES
REPORTING LEVELS

ANALYSIS	WATER (pCi/l)	AIRBORNE PARTICULATE OR GASES (pCi/m^3)	FISH (pCi/kg, wet)	MILK (pCi/l)	FOOD PRODUCTS (pCi/kg, wet)
H-3	20,000(1)				
Mn-54	1,000		30,000		
Fe-59	400		10,000		
Co-58	1,000		30,000		
Co-60	300		10,000		
Zn-65	300		20,000		
Zr-Nb-95	400				
I-131	2(2)	0.9		3	100
Cs-134	30	10	1,000	60	1,000
Cs-137	50	20	2,000	70	2,000
Ba-La-140	200			300	

(1) For drinking water samples. This is 40 CFR Part 141 value. If no drinking water pathway exists, a value of 30,000 pCi/l may be used.
(2) If no drinking water pathway exists, a value of 20 pCi/l may be used.

Table R12.5.1-3

DETECTION CAPABILITIES FOR ENVIRONMENTAL SAMPLE ANALYSIS[a]

LOWER LIMIT OF DETECTION (LLD)[b]

ANALYSIS	WATER (pCi/l)	AIRBORNE PARTICULATE OR GASES (pCi/m^3)	FISH (pCi/kg, wet)	MILK (pCi/l)	FOOD PRODUCTS (pCi/kg, wet)	SEDIMENT/SOIL (pCi/kg, dry)
Gross Beta	4	0.01				
H-3	2,000					
Mn-54	15		130			
Fe-59	30		260			
Co-58,60	15		130			
Zn-65	30		260			
Zr-95	30					
Nb-95	15					
I-131	1[c]	0.07		1	60	
Cs-134	15	0.05	130	15	60	150
Cs-137	18	0.06	150	18	80	180
Ba-140	60			60		
La-140	15			15		

(a) All peaks identified at the 95% confidence level, shall also be analyzed and reported.
(b) Most restrictive ODCM LLD requirement or technical requirement. The reported minimum detectable concentration (MDC) shall be ≤ these values.
(c) If no drinking water pathway exists, a value of 15 pCi/l may be used (NUREG 1301/1302)

12.5 RADIOLOGICAL ENVIRONMENTAL MONITORING PROGRAM

12.5.2 Land Use Census

REC 12.5.2 A Land Use Census shall be conducted and shall identify within a distance of 10 km (6.2 miles) the location in each of the 16 meteorological sectors of the nearest milk animal, the nearest residence, and an enumeration of livestock. For dose calculation, a garden will be assumed at the nearest residence.

----------NOTES----------

1. The 16 meteorological sectors requirement may be reduced according to geographical limitations; e.g. at a lake site where some sectors will be over water.
2. The nearest industrial facility shall also be documented if closer than the nearest residence.

APPLICABILITY: At all times.

ACTIONS

CONDITION	REQUIRED ACTION	COMPLETION TIME
A. ----------NOTE---------- Required Action A.1 and A.2 shall be completed if this Condition is entered. ---------- Land use census identifies a location which yields a calculated dose or dose commitment, via the same exposure pathway, that is at least 20% greater than at a location from which samples are currently being obtained in accordance with REC 12.5.1.	A.1 Add the new location to the Radiological Environmental Monitoring Program (REMP). AND	30 days

(continued)

ACTIONS

CONDITION	REQUIRED ACTION	COMPLETION TIME
A. (continued)	A.2 ----------NOTE---------- The sampling location(s), excluding the control location, having the lowest calculated dose or dose commitment(s), via the same exposure pathway, may be deleted from the REMP after October 31 of the year in which Land Use Census was conducted. ---------- Submit the documentation for a change in the ODCM in the next Annual Radiological Environmental Operating Report and include the revised figures and tables for the ODCM reflecting the new location(s) with information supporting the change in sampling locations.	 In accordance with Technical Specification 5.6.2.

SURVEILLANCE REQUIREMENTS

SURVEILLANCE		FREQUENCY
RSR 12.5.2.1	Conduct a land use census during the growing season, between June 1 and October 1, using information that will provide the best results, such as by a door-to-door survey, aerial survey, or by consulting local agriculture authorities. The results of the census shall be included in the Annual Radiological Environmental Operating Report.	--------NOTE-------- RSR 12.0.2 and 12.0.3 are not applicable. ---------- 12 months

12.5 RADIOLOGICAL ENVIRONMENTAL MONITORING PROGRAM

12.5.3 Inter-Laboratory Comparison Program

REC 12.5.3 Analyses shall be performed on radioactive materials supplied as part of an Interlaboratory Comparison Program that is traceable to NIST.

APPLICABILITY: At all times.

ACTIONS

CONDITION	REQUIRED ACTION	COMPLETION TIME
A. ----------NOTE---------- Required Action A.1 shall be completed if this Condition is entered. ---------- Requirements of the REC not met.	A.1 Report corrective actions to prevent recurrence to the NRC in the next Annual Radiological Environmental Operating Report.	In accordance with Technical Specification 5.6.2

SURVEILLANCE REQUIREMENTS

SURVEILLANCE		FREQUENCY
RSR 12.5.3	Include a summary of the results of the Interlaboratory Comparison Program in the Annual Radiological Environmental Operating Report.	In accordance with Technical Specification 5.6.2

12.5 RADIOLOGICAL ENVIRONMENTAL MONITORING PROGRAM

12.5.4 Meteorological Monitoring Program (NOT APPLICABLE)

12.6 REPORTING REQUIREMENTS

12.6.1 Annual Radiological Environmental Operating Report

12.6.1.1 Routine Annual Radiological Environmental Operating Report covering the operation of the Units during the previous calendar year shall be submitted by May 15 of each year. The report shall include summaries, interpretations, and an analysis of trends of the results of the radiological environmental monitoring program for the report period. The material provided shall be consistent with the objectives outlined in the Offsite Dose Calculation Manual, and in 10 CFR 50, Appendix I, Sections IV.B.2, IV.B.3, and IV.c. It should include, as found appropriate, a comparison of preoperational studies with operational controls or with previous environmental surveillance reports, and an assessment of the observed impacts of the plant operation on the environment. A single submittal may be made for a multiple unit station. The submittal should combine sections common to all units at the station.

12.6.1.2 The Annual Radiological Environmental Operating Report shall include the results of all radiological environmental samples and of all environmental radiation measurements taken during the period pursuant to the locations specified in the tables and figures in Part II, Section 6 of the ODCM, as well as summarized and tabulated results of these analyses and measurements in the format of the table in the Radiological Assessment Branch Technical Position, Revision 1, November 1979. In the event that some individual results are not available for inclusion with the report, the report shall be submitted noting and explaining the reasons for the missing results. The missing data shall be submitted as soon as possible in a supplementary report.

12.6.1.3 The reports shall also include the following: a summary description of the Radiological Environmental Monitoring Program; legible maps covering all sampling locations keyed to a table giving distances and directions from the midpoint between the two units; reasons for not conducting the Radiological Environmental Monitoring Program as required by REC 12.5.1, and discussion of all deviations from the sampling schedule of Table R12.5.1-1; a Table of Missed Samples and a Table of Sample Anomalies for all deviations from the sampling schedule of ODCM Part II, Table 6.1-1; discussion of environmental sample measurements that exceed the reporting levels of Table R12.5.1-2 but are not the result of plant effluents; discussion of all analyses in which the LLD required by Table R12.5.1-3 was not achievable; results of the Land Use Census required by REC 12.5.2; and the results of licensee participation in an Interlaboratory Comparison Program and the corrective actions being taken if the specified program is not being performed as required by REC 12.5.3.

(continued)

12.6 REPORTING REQUIREMENTS

12.6.1 Annual Radiological Environmental Operating Report (continued)

12.6.1.4 The Annual Radiological Environmental Operating Report shall also include an annual summary of hourly meteorological data collected over the previous year. This annual summary may be either in the form of an hour-by-hour listing on magnetic tape of wind speed, wind direction, atmospheric stability, and precipitation (if measured), or in the form of joint frequency distributions of wind speed, wind direction, and atmospheric stability. In lieu of submission with the Annual Radiological Environmental Operating Report, the licensee has the option of retaining the summary of required meteorological data on site in a file that shall be provided to the NRC upon request.

12.6.1.5 The Annual Radiological Environmental Operating Report shall also include an assessment of the radiation doses due to the radioactive liquid and gaseous effluents released from the unit or station during the previous calendar year. This report shall also include an assessment of radiation doses to the most likely exposed MEMBER OF THE PUBLIC from reactor releases and other nearby uranium fuel cycle sources, including doses from primary effluent pathways and direct radiation, for the previous calendar year. The assessment of radiation doses shall be performed in accordance with the methodology and parameters in the ODCM and in compliance with 10 CFR 20 and 40 CFR 190, "Environmental Radiation Protection Standards for Nuclear Power Operation."

12.6 REPORTING REQUIREMENTS

12.6.2 Annual Radioactive Effluent Release Report

12.6.2.1 The radioactive effluent release reports covering the operation of the unit during the previous calendar year of operation shall be submitted in accordance with 10 CFR 50.36a prior to May 1 of each year. The report shall include a summary of the quantities of radioactive liquid and gaseous effluent and solid waste released from the unit. The material provided shall be consistent with the objectives outlined in the ODCM and the PROCESS CONTROL PROGRAM and in conformance with 10 CFR 50.36a and 10 CFR 50, Appendix I, Section IV.B.1. A single submittal may be made for a multiple unit station. The submittal should combine those sections that are common to all units at the station; however, for units with separate radwaste systems, the submittal shall specify the releases of radioactive material from each unit.

12.6.2.2 The radioactive effluent release reports shall include a summary of the quantities of radioactive liquid and gaseous effluents and solid waste released from the unit as outlined in Regulatory Guide 1.21, "Measuring, Evaluating and Reporting Radioactivity in Solid Wastes and Releases of Radioactive Materials in Liquid and Gaseous Effluents from Light-Water-Cooled Nuclear Power Plants," Revision 1, June 1974, with data summarized on a quarterly basis following the format of Appendix B thereof.

12.6.2.3 The radioactive effluent release report shall include the following information for each type of solid waste shipped offsite during the report period:

1. Container volume,
2. Total curie quantity (specify whether determined by measurement or estimate),
3. Principal radionuclides (specify whether determined by measurement or estimate),
4. Type of waste (e.g., spent resin, compacted dry waste, evaporator bottoms),
5. Type of container (e.g., LSA, Type A, Type B, Large Quantity), and
6. Solidification agent (e.g., cement, urea formaldehyde).

(continued)

12.6 REPORTING REQUIREMENTS

12.6.2 Radioactive Effluent Release Report (continued)

12.6.2.4 The radioactive effluent release reports shall include unplanned releases from the site to unrestricted areas of radioactive materials in gaseous and liquid effluents on a quarterly basis.

12.6.2.5 The radioactive effluent release reports shall include any changes to the PROCESS CONTROL PROGRAM (PCP) made during the reporting period.

12.6.2.6 The radioactive effluent release reports shall include a description of licensee initiated major changes to the radioactive waste treatment systems (liquid, gaseous and solid), as described in Section 12.6.3.)

12.6 REPORTING REQUIREMENTS

12.6.3 Offsite Dose Calculation Manual (ODCM)

12.6.3.1 The ODCM is common to LaSalle Unit 1 and LaSalle Unit 2. The ODCM shall contain the methodology and parameters used in the calculation of offsite doses resulting from radioactive gaseous and liquid effluents, in the calculation of gaseous and liquid effluent monitoring alarm and trip setpoints, and in the conduct of the radiological environmental monitoring program; and

12.6.3.2 The ODCM shall also contain the radioactive effluent controls and radiological environmental monitoring activities, and descriptions of the information that should be included in the Annual Radiological Environmental Operating, and Radioactive Effluent Release Reports required by Technical Specifications 5.6.2 and 5.6.3.

12.6.3.3 Licensee-initiated changes to the ODCM:

a. Shall be documented and records of reviews performed shall be retained as required by the Quality Assurance (QA) Manual. This documentation:

   1. Shall contain sufficient information to support the change(s) together with the appropriate analyses or evaluations justifying the change(s); and

   2. Shall contain a determination that the change(s) maintain the level of radioactive effluent control required by 10 CFR 20.1302, 40 CFR Part 190, 10 CFR 50.36a, and 10 CFR Part 50, Appendix I, and not adversely impact the accuracy or reliability of effluent, dose, or setpoint calculations.

   3. Shall become effective after approval of the Plant Manager.

   4. Shall be submitted to the NRC in the form of a complete, legible copy of the entire ODCM as a part of or concurrent with the Radioactive Effluent Release Report for the period of the report in which any change to the ODCM was made. Each change shall be identified by markings in the margin of the affected pages, clearly indicating the area of the page that was changed, and shall indicate the date (i.e., month and year) the change was implemented.

12.6 REPORTING REQUIREMENTS

12.6.4 Major Changes to Radioactive Waste Treatment Systems (Liquid and Gaseous)

12.6.4.1 Licensee initiated major changes to the radioactive waste treatment systems (liquid and gaseous):

a. Shall be reported to the Commission in the Radioactive Effluent Release Report for the period in which the evaluation was reviewed by the Plant Operations Review Committee (PORC). The discussion of each change shall contain:

1. A summary of the evaluation that led to the determination that the change could be made in accordance with 10 CFR 50.59;

2. Sufficient detailed information to totally support the reason for the change without benefit or additional or supplemental information;

3. A detailed description of the equipment, components and processes involved and the interfaces with other plant systems;

4. An evaluation of the change which shows the predicted releases of radioactive materials in liquid and gaseous effluents waste that differ from those previously predicted in the license application and amendments thereto;

5. An evaluation of the change which shows the expected maximum exposures to individual in the unrestricted area and to the general population that differ from those previously estimated in the license application and amendments thereto;

6. A comparison of the predicted releases of radioactive materials, in liquid and gaseous effluents, to the actual releases for the period to when the changes are to be made;

7. An estimate of the exposure to plant operating personnel as a result of the change; and

8. Documentation of the fact that the change was reviewed and found acceptable by the PORC.

b. Shall become effective upon review and acceptance by the PORC.

BASES

General

It is expected that releases of radioactive material in effluents will be kept at small fractions of the limits specified in Section 20.1302 of 10 CFR, Part 20. At the same time, the licensee is permitted the flexibility of operation, compatible with consideration of health and safety, to assure that the public is provided a dependable source of power even under unusual operating conditions which may temporarily result in releases higher than such small fractions, but still within the limits specified in Section 20.1302 of 10 CFR, Part 20. It is expected that in using this operational flexibility under unusual operating conditions the licensee will exert his best efforts to keep levels of radioactive material in effluents as low as practicable.

B 12.0 OFFSITE DOSE CALCULATION MANUAL (ODCM) RADIOLOGICAL EFFLUENT CONTROL (REC) APPLICABILITY

BASES

RECs	REC 12.0.1 through REC 12.0.6 establish the general requirements applicable to all RECs in Sections 12.1 through 12.5 and apply at all times, unless otherwise stated.
REC 12.0.1	REC 12.0.1 establishes the Applicability statement within each individual REC as the requirement for when the REC is required to be met (i.e., when the unit is in the MODES or other specified conditions of the Applicability statement of each Requirement).
REC 12.0.2	REC 12.0.2 establishes that upon discovery of a failure to meet a REC, the associated ACTIONS shall be met. The Completion Time of each Required Action for an ACTIONS Condition is applicable from the point in time that an ACTIONS Condition is entered. The Required Actions establish those remedial measures that must be taken within specified Completion Times when the requirements of a REC are not met. This Requirement establishes that: a. Completion of the Required Actions within the specified Completion Times constitutes compliance with a REC; and b. Completion of the Required Actions is not required when a REC is met within the specified Completion Time, unless otherwise specified. There are two basic types of Required Actions. The first type of Required Action specifies a time limit in which the REC must be met. This time limit is the Completion Time to restore an inoperable system or component to OPERABLE status or to restore variables to within specified limits. If this type of Required Action is not completed within the specified Completion Time, a shutdown may be required to place the unit in a MODE or condition in which the REC is not applicable. (Whether stated as a Required Action or not, correction of the entered Condition is an action that may always be considered upon entering ACTIONS.) The second type of Required

(continued)

BASES

REC 12.0.2 (continued)

Action specifies the remedial measures that permit continued operation of the unit that is not further restricted by the Completion Time. In this case, compliance with the Required Actions provides an acceptable level of safety for continued operation.

Completing the Required Actions is not required when a REC is met or is no longer applicable, unless otherwise stated in the individual RECs.

The nature of some Required Actions of some Conditions necessitates that, once the Condition is entered, the Required Actions must be completed even though the associated Condition no longer exists. The individual REC's ACTIONS specify the Required Actions where this is the case. An example of this is in REC 12.4.2, "Dose from Noble Gases."

The Completion Times of the Required Actions are also applicable when a system or component is removed from service intentionally. The reasons for intentionally relying on the ACTIONS include, but are not limited to, performance of Surveillances, preventive maintenance, corrective maintenance, or investigation of operational problems. Entering ACTIONS for these reasons must be done in a manner that does not compromise safety. Intentional entry into ACTIONS should not be made for operational convenience. Additionally, if intentional entry into ACTIONS would result in redundant equipment being inoperable, alternatives should be used instead. Doing so limits the time both subsystems/divisions of a function are inoperable and limits the time conditions exist which may result in REC 12.0.3 being entered. Individual RECs may specify a time limit for performing a RSR when equipment is removed from service or bypassed for testing. In this case, the Completion Times of the Required Actions are applicable when this time limit expires, if the equipment remains removed from service or bypassed.

When a change in MODE or other specified condition is required to comply with Required Actions, the unit may enter a MODE or other specified condition in which another REC becomes applicable. In this case, the Completion Times of the associated Required Actions would apply from the point in time that the new REC becomes applicable and the ACTIONS Condition(s) are entered.

(continued)

BASES (continued)

REC 12.0.3

REC 12.0.3 establishes the actions that must be implemented when a REC is not met and:

a. An associated Required Action and Completion Time is not met and no other Condition applies; or

b. The condition of the unit is not specifically addressed by the associated ACTIONS. This means that no combination of Conditions stated in the ACTIONS can be made that exactly corresponds to the actual condition of the unit. Sometimes, possible combinations of Conditions are such that entering REC 12.0.3 is warranted; in such cases, the ACTIONS specifically state a Condition corresponding to such combinations and also that REC 12.0.3 be entered immediately.

Upon entering REC 12.0.3, 1 hour is allowed to implement appropriate compensatory actions and verify the plant is not in an unanalyzed condition or that a required safety function is not compromised. Within 12 hours, Shift Operations Superintendent or designee approval of the compensatory actions and the plan for exiting REC 12.0.3 must be obtained. The use and interpretation of specified times to complete the actions of REC 12.0.3 are consistent with the discussion of Section 1.3, Completion Times.

The actions required in accordance with REC 12.0.3 may be terminated and REC 12.0.3 exited if any of the following occurs:

a. The REC is now met.

b. A Condition exists for which the Required Actions have now been performed.

c. ACTIONS exist that do not have expired Completion Times. These Completion Times are applicable from the point in time that the Condition is initially entered and not from the time REC 12.0.3 is exited.

(continued)

BASES

REC 12.0.3 (continued)

In MODES 1, 2, and 3, REC 12.0.3 provides actions for Conditions not covered in other Requirements. The requirements of REC 12.0.3 do not apply in MODES 4 and 5 because the unit is already in the most restrictive Condition. The requirements of REC 12.0.3 do not apply in other specified conditions of the Applicability (unless in MODE 1, 2, or 3) because the ACTIONS of individual RECs sufficiently define the remedial measures to be taken.

REC 12.0.4

REC 12.0.4 establishes limitations on changes in MODES or other specified conditions in the Applicability when an REC is not met. It precludes placing the unit in a MODE or other specified condition stated in that Applicability (e.g., Applicability desired to be entered) when the following exist:

a. Unit conditions are such that the requirements of the REC would not be met in the Applicability desired to be entered; and

b. Continued noncompliance with the REC requirements, if the Applicability were entered, would result in the unit being required to exit the Applicability desired to be entered to comply with the Required Actions.

Compliance with Required Actions that permit continued operation of the unit for an unlimited period of time in a MODE or other specified condition provides an acceptable level of safety for continued operation. This is without regard to the status of the unit before or after the MODE change. Therefore, in such cases, entry into a MODE or other specified condition in the Applicability may be made in accordance with the provisions of the Required Actions. The provisions of this REC should not be interpreted as endorsing the failure to exercise the good practice of restoring systems or components to OPERABLE status before entering an associated MODE or other specified condition in the Applicability.

The provisions of REC 12.0.4 shall not prevent changes in MODES or other specified conditions in the Applicability that are required to comply with ACTIONS. In addition, the provisions of REC 12.0.4 shall not prevent

(continued)

BASES

REC 12.0.4 (continued)

changes in MODES or other specified conditions in the Applicability that result from any unit shutdown.

Exceptions to REC 12.0.4 are stated in the individual RECs. The exceptions allow entry into MODES or other specified conditions in the Applicability when the associated ACTIONS to be entered do not provide for continued operation for an unlimited period of time. Exceptions may apply to all the ACTIONS or to a specific Required Action of a REC.

Surveillances do not have to be performed on the associated inoperable equipment (or on variables outside the specified limits), as permitted by RSR 12.0.1. Therefore, changing MODES or other specified conditions while in an ACTIONS Condition, either in compliance with REC 12.0.4, or where an exception to REC 12.0.4 is stated, is not a violation of RSR 12.0.1 or RSR 12.0.4 for those Surveillances that do not have to be performed due to the associated inoperable equipment. However, RSRs must be met to ensure OPERABILITY prior to declaring the associated equipment OPERABLE (or variable within limits) and restoring compliance with the affected REC.

REC 12.0.4 is only applicable when entering MODE 3 from MODE 4, MODE 2 from MODE 3 or 4, or MODE 1 from MODE 2. Furthermore, REC 12.0.4 is applicable when entering any other specified condition in the Applicability only while operating in MODE 1, 2, or 3. The requirements of REC 12.0.4 do not apply in MODES 4 and 5, or in other specified conditions of the Applicability (unless in MODE 1, 2, or 3) because the ACTIONS of individual Requirements sufficiently define the remedial measures to be taken.

REC 12.0.5

REC 12.0.5 establishes the allowance for restoring equipment to service under administrative controls when it has been removed from service or declared inoperable to comply with ACTIONS. The sole purpose of this Requirement is to provide an exception to REC 12.0.2 (e.g., to not comply with the applicable Required Action(s)) to allow the performance of required testing to demonstrate:

a. The OPERABILITY of the equipment being returned to service; or

(continued)

BASES

REC 12.0.5 (continued)

b. The OPERABILITY of other equipment.

The administrative controls ensure the time the equipment is returned to service in conflict with the requirements of the ACTIONS is limited to the time absolutely necessary to perform the required testing to demonstrate OPERABILITY. This Requirement does not provide time to perform any other preventive or corrective maintenance.

An example of demonstrating the OPERABILITY of other equipment is taking an inoperable channel or trip system out of the tripped condition to prevent the trip function from occurring during the performance of required testing on another channel in the other trip system. A similar example of demonstrating the OPERABILITY of other equipment is taking an inoperable channel or trip system out of the tripped condition to permit the logic to function and indicate the appropriate response during the performance of required testing on another channel in the same trip system.

REC 12.0.6

REC 12.0.6 establishes the applicability of each REC to both Unit 1 and Unit 2 operation. Whenever a requirement applies to only one unit, or is different for each unit, this will be identified in the appropriate section of the REC (e.g., Applicability, RSR, etc.) with parenthetical reference, Notes, or other appropriate presentation within the body of the requirement.

B 12.0 ODCM RADIOLOGICAL SURVEILLANCE REQUIREMENT (RSR) APPLICABILITY

BASES

RSRs

RSR 12.0.1 through RSR 12.0.5 establish the general requirements applicable to all Requirements in 12.1 through 12.5 and apply at all times, unless otherwise stated.

RSR 12.0.1

RSR 12.0.1 establishes the requirement that RSRs must be met during the MODES or other specified conditions in the Applicability for which the requirements of the REC apply, unless otherwise specified in the individual RSRs. This REC is to ensure that RSRs are performed to verify the OPERABILITY of systems and components, and that variables are within specified limits. Failure to meet a RSR within the specified Frequency, in accordance with RSR 12.0.2, constitutes a failure to meet a REC.

Systems and components are assumed to be OPERABLE when the associated RSRs have been met. Nothing in this RSR, however, is to be construed as implying that systems or components are OPERABLE when:

a. The systems or components are known to be inoperable, although still meeting the RSRs; or

b. The requirements of the RSR(s) are known to be not met between required RSR performances.

RSR do not have to be performed when the unit is in a MODE or other specified condition for which the requirements of the associated REC are not applicable, unless otherwise specified.

Unplanned events may satisfy the requirements (including applicable acceptance criteria) for a given RSR. In this case, the unplanned event may be credited as fulfilling the performance of the RSR.

(continued)

BASES

RSR 12.0.1 (continued)

RSRs, including RSRs invoked by Required Actions, do not have to be performed on inoperable equipment because the ACTIONS define the remedial measures that apply. RSRs have to be met and performed in accordance with RSR 12.0.2, prior to returning equipment to OPERABLE status.

Upon completion of maintenance, appropriate post maintenance testing is required to declare equipment OPERABLE. This includes ensuring applicable RSRs are not failed and their most recent performance is in accordance with RSR 12.0.2. Post maintenance testing may not be possible in the current MODE or other specified conditions in the Applicability due to the necessary unit parameters not having been established. In these situations, the equipment may be considered OPERABLE provided testing has been satisfactorily completed to the extent possible and the equipment is not otherwise believed to be incapable of performing its function. This will allow operation to proceed to a MODE or other specified condition where other necessary post maintenance tests can be completed.

RSR 12.0.2

RSR 12.0.2 establishes the requirements for meeting the specified Frequency for RSRs and any Required Action with a Completion Time that requires the periodic performance of the Required Action on a "once per..." interval.

RSR 12.0.2 permits a 25% extension of the interval specified in the Frequency. This extension facilitates RSR scheduling and considers plant operating conditions that may not be suitable for conducting the RSR (e.g., transient conditions or other ongoing RSR or maintenance activities).

The 25% extension does not significantly degrade the reliability that results from performing the RSR at its specified Frequency. This is based on the recognition that the most probable result of any particular RSR being performed is the verification of conformance with the RSRs.

As stated in RSR 12.0.2, the 25% extension also does not apply to the initial portion of a periodic Completion Time that requires performance on a "once per..." basis. The 25% extension applies to each performance after the initial performance. The initial performance of the Required Action,

(continued)

BASES

RSR 12.0.2 (continued)

whether it is a particular RSR or some other remedial action, is considered a single action with a single Completion Time. One reason for not allowing the 25% extension to this Completion Time is that such an action usually verifies that no loss of function has occurred by checking the status of redundant or diverse components or accomplishes the function of the inoperable equipment in an alternative manner.

The provisions of RSR 12.0.2 are not intended to be used repeatedly merely as an operational convenience to extend RSR intervals (other than those consistent with refueling intervals) or periodic Completion Time intervals beyond those specified.

RSR 12.0.3

RSR 12.0.3 establishes the flexibility to defer declaring affected equipment inoperable or an affected variable outside the specified limits when a RSR has not been completed within the specified Frequency. A delay period of up to 24 hours or up to the limit of the specified Frequency, whichever is greater, applies from the point in time it is discovered that the RSR has not been performed in accordance with RSR 12.0.2, and not at the time that the specified Frequency was not met. This delay period provides adequate time to complete RSRs that have been missed. This delay period permits the completion of a RSR before complying with Required Actions or other remedial measures that might preclude completion of the RSR.

The basis for this delay period includes consideration of unit conditions, adequate planning, availability of personnel, the time required to perform the RSR, the safety significance of the delay in completing the required RSR, and the recognition that the most probable result of any particular RSR being performed is the verification of conformance with the requirements.

When a RSR with a Frequency based not on time intervals, but upon specified unit conditions, operating situations, or requirements of regulations (e.g., prior to each release, or in accordance with the Radioactive Liquid Waste Sampling and Analysis Program, etc.) is discovered to not have been

(continued)

BASES

RSR 12.0.3 (continued)

performed when specified, RSR 12.0.3 allows for the full delay period of up to the specified Frequency to perform the RSR. However, since there is not a time interval specified, the missed RSR should be performed at the first reasonable opportunity.

RSR 12.0.3 provides a time limit for, and allowances for the performance of, RSRs that become applicable as a consequence of MODE changes imposed by Required Actions.

Failure to comply with specified Frequencies for RSRs is expected to be an infrequent occurrence. Use of the delay period established by RSR 12.0.3 is a flexibility which is not intended to be used as an operational convenience to extend RSR intervals. While up to 24 hours or the limit of the specified Frequency is provided to perform the missed RSR, it is expected that the missed RSR will be performed at the first reasonable opportunity. The determination of the first reasonable opportunity should include consideration of the impact on plant risk (from delaying the RSR as well as any plant configuration changes required or shutting the plant down to perform the RSR) and impact on any analysis assumptions, in addition to unit conditions, planning, availability of personnel, and the time required to perform the RSR. This risk impact should be managed through the program in place to implement 10 CFR 50.65(a)(4) and its implementation guidance, NRC Regulatory Guide 1.182, "Assessing and Managing Risk Before Maintenance Activities at Nuclear Power Plants." This Regulatory Guide addresses consideration of temporary and aggregate risk impacts, determination of risk management action thresholds, and risk management action up to and including plant shutdown. The missed RSR should be treated as an emergent condition as discussed in the Regulatory Guide. The risk evaluation may use quantitative, qualitative, or blended methods. The degree of depth and rigor of the evaluation should be commensurate with the importance of the component. Missed RSRs for important components should be analyzed quantitatively. If the results of the risk evaluation determine the risk increase is significant, this evaluation should be used to determine the safest course of action. All missed RSRs will be placed in the station's Corrective Action Program.

(continued)

BASES

RSR 12.0.3 (continued)

If a RSR is not completed within the allowed delay period, then the equipment is considered inoperable or the variable then is considered outside the specified limits and the Completion Times of the Required Actions for the applicable REC Conditions begin immediately upon expiration of the delay period. If a RSR is failed within the delay period, then the equipment is inoperable, or the variable is outside the specified limits and the Completion Times of the Required Actions for the applicable REC Conditions begin immediately upon the failure of the RSR.

Completion of the RSR within the delay period allowed by this RSR, or within the Completion Time of the ACTIONS, restores compliance with RSR 12.0.1.

RSR 12.0.4

RSR 12.0.4 establishes the requirement that all applicable RSRs must be met before entry into a MODE or other specified condition in the Applicability.

This RSR ensures that system and component OPERABILITY requirements and variable limits are met before entry into MODES or other specified conditions in the Applicability for which these systems and components ensure safe operation of the unit.

The provisions of this RSR should not be interpreted as endorsing the failure to exercise the good practice of restoring systems or components to OPERABLE status before entering an associated MODE or other specified condition in the Applicability.

However, in certain circumstances, failing to meet a RSR will not result in RSR 12.0.4 restricting a MODE change or other specified condition change. When a system, subsystem, division, component, device, or variable is inoperable or outside its specified limits, the associated RSR(s) are not required to be performed per RSR 12.0.1 which states that RSRs do not have to be performed on inoperable equipment. When equipment is inoperable, RSR 12.0.4 does not apply to the associated RSR(s) since the requirement for the RSR(s) to be performed is removed. Therefore, failing to perform the RSRs within the specified Frequency, on equipment that is inoperable, does not result in a RSR 12.0.4 restriction to changing MODES or other specified conditions of the Applicability. However, since the REC is not met in this instance, REC 12.0.4 will govern any restrictions that may (or may not) apply to MODE or other specified condition changes.

(continued)

BASES

RSR 12.0.4 (continued)

The provisions of RSR 12.0.4 shall not prevent changes in MODES or other specified conditions in the Applicability that are required to comply with ACTIONS. In addition, the provisions of RSR 12.0.4 shall not prevent changes in MODES or other specified conditions in the Applicability that result from any unit shutdown.

The precise requirements for performance of RSRs are specified such that exceptions to RSR 12.0.4 are not necessary. The specific time frames and conditions necessary for meeting the RSRs are specified in the Frequency, in the RSR, or both. This allows performance of RSRs when the prerequisite condition(s) specified in a RSR procedure require entry into the MODE or other specified condition in the Applicability of the associated REC prior to the performance or completion of a RSR. A RSR that could not be performed until after entering the REC Applicability would have its Frequency specified such that it is not "due" until the specific conditions needed are met. Alternately, the RSR may be stated in the form of a Note as not required (to be met or performed) until a particular event, condition, or time has been reached. Further discussion of the specific formats of RSRs' annotation is found in Section 1.4, Frequency.

RSR 12.0.4 is only applicable when entering MODE 3 from MODE 4, MODE 2 from MODE 3 or 4, or MODE 1 from MODE 2. Furthermore, RSR 12.0.4 is applicable when entering any other specified condition in the Applicability only while operating in MODE 1, 2, or 3. The requirements of RSR 12.0.4 do not apply in MODES 4 and 5, or in other specified conditions of the Applicability (unless in MODE 1, 2, or 3) because the ACTIONS of individual Controls sufficiently define the remedial measures to be taken.

RSR 12.0.5

RSR 12.0.5 establishes the applicability of each RSR to both Unit 1 and Unit 2 operation. Whenever a requirement applies to only one unit, or is different for each unit, this will be identified with parenthetical reference, Notes, or other appropriate presentation within the RSR.

B 12.1 NOT USED

INTENTIONALLY BLANK

B 12.2 INSTRUMENTATION

B 12.2.1 Radioactive Liquid Effluent Monitoring Instrumentation

BASES

The radioactive liquid effluent monitoring instrumentation is provided to monitor and control, as applicable, the releases of radioactive materials in liquid effluents during actual or potential releases of liquid effluents. The alarm/trip setpoints for these instruments shall be calculated in accordance with the procedures in the ODCM to ensure that the alarm/trip will occur prior to exceeding the limits of RECS. The OPERABILITY and use of this instrumentation is consistent with the requirements of General Design Criteria 60, 63, and 64 of Appendix A to 10 CFR Part 50.

B 12.2 INSTRUMENTATION

B 12.2.2 Radioactive Gaseous Effluent Monitoring Instrumentation

BASES

The radioactive gaseous effluent monitoring instrumentation is provided to monitor and control, as applicable, the releases of radioactive materials in gaseous effluents during actual or potential releases of gaseous effluents. The alarm/trip setpoints for these instruments shall be calculated in accordance with the procedures in the ODCM to ensure that the alarm/trip will occur prior to exceeding the limits of RECS.

B 12.3 LIQUID EFFLUENTS

B 12.3.1 Liquid Effluent Concentration

BASES

This control is provided to ensure that the concentration of radioactive materials released in liquid waste effluents from the site will be less than ten (10) times the concentration levels specified in Appendix B, Table 2, Column 2 to 10 CFR 20.1001-2402. This limitation provides additional assurance that the levels of radioactive materials in bodies of water outside the site will result in exposure within (1) the Section II.A design objectives of Appendix I, 10 CFR 50, to an individual, and (2) the limits of 10 CFR 20.1301 to the population. In addition, this limit is associated with 40 CFR 141 which states concentration limits at the nearest downstream potable water supply. The results of the analyses of RSR 12.3.1.1, 12.3.1.2, and 12.3.1.3 shall be used with the calculational methods in the ODCM to assure that the concentrations at the point of release are maintained within the limits of this REC. Refer to Technical Specification 5.5.9.b for the definition of an outside temporary tank.

B.12.3 LIQUID EFFLUENTS

B 12.3.2 Dose From Liquid Effluents

BASES

This control is provided to implement the requirements of Sections II.A, III.A and IV.A of Appendix I, 10 CFR Part 50. The REC implements the guides set forth in Section II.A of Appendix I. The ACTION statements provide the required operating flexibility and at the same time implement the guides set forth in Section IV.A of Appendix I to assure that the releases of radioactive material in liquid effluents will be kept "as low as is reasonably achievable." Also, for fresh water sites with drinking water supplies which can be potentially affected by plant operations, there is reasonable assurance that the operation of the facility will not result in radionuclide concentrations in the finished drinking water that are in excess of the requirements of 40 CFR 141. The dose calculations in the ODCM implement the requirements in Section III.A of Appendix I that conformance with the guides of Appendix I be shown by calculational procedures based on models and data, such that the actual exposure of an individual through appropriate pathways is unlikely to be substantially underestimated. The equations specified in the ODCM for calculating the doses due to the actual release rates of radioactive materials in liquid effluents are consistent with the methodology provided in Regulatory Guide 1.109, "Calculation of Annual Doses to Man from Routine Releases of Reactor Effluents for the Purpose of Evaluating Compliance with 10 CFR Part 50, Appendix I," Revision 1, October 1977 and Regulatory Guide 1.113, "Estimating Aquatic Dispersion of Effluents from Accidental and Routine Reactor Releases for the Purpose of Implementing Appendix I," April 1977.

This control applies to the release of radioactive materials in liquid effluents from each reactor at the site. For units with shared radwaste treatment systems, the liquid effluents from the shared systems are proportioned among the units sharing that system.

B 12.3 LIQUID EFFLUENTS

B 12.3.3 Liquid Radwaste Treatment Systems

BASES

The OPERABILITY of the liquid radwaste treatment system ensures that this system will be available for use whenever liquid effluents require treatment prior to release to the environment. The requirement that the appropriate portions of this system be used when specified provides assurance that the releases of radioactive materials in liquid effluents will be kept "as low as is reasonably achievable." A system bypass allows connection to portable waste treatment equipment. This enables the efficient processing of liquid radwaste through the use of state-of-the-art radwaste processing technology. The portable radwaste treatment system may be used in lieu of various portions of the liquid radwaste treatment system. When a portable waste treatment is not used, RSR 12.3.3.2 may be extended to 180 days. This control implements the requirements of 10 CFR Part 50.36a. General Design Criterion 50 of Appendix A to 10 CFR Part 50 and the design objective given in Section II.0 of Appendix I to 10 CFR Part 50. The specified limits governing the use of appropriate portions of the liquid radwaste treatment system were specified as a suitable fraction of the dose design objectives set forth in Section II.A of Appendix I, 10 CFR Part 50, for liquid effluents. This specification implements Technical Specification Section 5.5.4.f for liquid effluents.

B 12.4 GASEOUS EFFLUENTS AND TOTAL DOSE

B 12.4.1 Gaseous Effluent Dose Rates

BASES

This control is provided to ensure that the dose at any time at the site boundary from gaseous effluents from all units on the site will be within the annual dose limits of RECS for unrestricted areas. These limits provide reasonable assurance that radioactive material discharged in gaseous effluents will not result in the exposure of an individual in an unrestricted area, either within or outside the site boundary exceeding the limits specified in 10 CFR 20.1301. For individuals who may at times be within the site boundary, the occupancy of the individual will be sufficiently low to compensate for any increase in the atmospheric diffusion factor above that for the site boundary. The specified release rate limits restrict, at all times, the corresponding gamma and beta dose rates above background to an individual at or beyond the site boundary to less than or equal to a dose rate of 500 mrem/year to the total body or to less than or equal to a dose rate of 3000 mrem/year to the skin. These release rate limits also restrict, at all times, the corresponding thyroid dose rate above background via the inhalation pathway to less than or equal to a dose rate of 1500 mrem/year.

This control applies to the release of radioactive effluents in gaseous effluents from all reactors at the site. For units within shared radwaste treatment systems, the gaseous effluents from the shared system are proportioned among the units sharing that system.

B 12.4 GASEOUS EFFLUENTS AND TOTAL DOSE

B 12.4.2 Dose from Noble Gases

BASES

This control is provided to implement the requirements of Sections II.B, III.A and IV.A of Appendix I, 10 CFR Part 50. The Operability Requirements are the guides set forth in Section II.B of Appendix I. The ACTION statements provide the required operating flexibilit and at the same time implement the guides set forth in Section IV.A of Appendix I to assure that the releases of radioactive material in gaseous effluents will be kept "as low as is reasonably achievable." The Surveillance Requirements implement the requirements in Section III.A of Appendix I that conformance with the guides of Appendix I be shown by calculational procedures based on models and data such that the actual exposure of an individual through appropriate pathways is unlikely to be substantially underestimated. The dose calculations established in the ODCM for calculating the doses due to the actual release rates of radioactive noble gases in gaseous effluents are consistent with the methodology provided in Regulatory Guide 1.109, "Calculation of Annual Doses to Man fror Routine Releases of Reactor Effluents for the Purpose of Evaluating Compliance with 10 CFR Part 50, Appendix I, "Revision 1, October 1977 and Regulatory Guide 1.111, "Methods for Estimating Atmospheric Transport and Dispersion of Gaseous Effluents in Routine Releases from Light-Water Cooled Reactors," Revision 1, July 1977. The ODCM equations provided for determining the air doses at the site boundary are based upon the historical average atmospheric conditions.

B 12.4 GASEOUS EFFLUENTS AND TOTAL DOSE

B 12.4.3 Dose from Iodine-131, Iodine-133, Tritium and Radioactive Materials in Particulate Form

BASES

The control is provided to implement the requirements of Sections II.C, III.A and IV.A of Appendix I, 10 CFR Part 50. The operability requirements are the guides set forth in Section II.C of Appendix I. The ACTION statements provide the required operating flexibility and at the same time implement the guides set forth in Section IV.A of Appendix I to assure that the releases of radioactive materials in gaseous effluents will be kept "as low as is reasonably achievable." The ODCM calculational methods specified in the Surveillance Requirements implement the requirements in Section III.A of Appendix I that conformance with the guides of Appendix I be shown by calculational procedures based on models and data, such that the actual exposure of an individual through appropriate pathways is unlikely to be substantially underestimated. The ODCM calculational methods for calculating the doses due to the actual release rates of the subject materials are consistent with the methodology provided in Regulatory Guide 1.109, "Calculation of Annual Doses to Man from Routine Releases of Reactor Effluents for the Purpose of Evaluating Compliance with 10 CFR Part 50, Appendix I, "Revision 1, October 1977 and Regulatory Guide 1.111, "Methods for Estimating Atmospheric Transport and Dispersion of Gaseous Effluents in Routine Releases from Light-Water-Cooled Reactors," Revision 1, July 1977. These equations also provide for determining the actual doses based upon the historical average atmospheric conditions. The release rate specifications for radioiodines, radioactive materials in particulate form and radionuclides other than noble gases are dependent on the existing radionuclide pathways to man, in the unrestricted area. The pathways which were examined in the development of these calculations were: 1) individual inhalation of airborne radionuclides, 2) deposition of radionuclides onto green leafy vegetation with subsequent consumption by man, 3) deposition onto grassy areas where milk animals and meat producing animals graze with consumption of the milk and meat by man, and 4) deposition on the ground with subsequent exposure of man.

B 12.4 GASEOUS EFFLUENTS AND TOTAL DOSE

B 12.4.4 GASEOUS RADWASTE TREATMENT (OFF-GAS) SYSTEM

BASES

The OPERABILITY of the GASEOUS RADWASTE TREATMENT SYSTEM ensures that the system will be available for use whenever gaseous effluents require treatment prior to release to the environment. The requirement that the appropriate portions of these systems be used, when specified, provides reasonable assurance that the releases of radioactive materials in gaseous effluents will be kept "as low as is reasonably achievable". This specification implements the requirements of 10 CFR Part 50.36a, General Design Criterion 60 of Appendix A to 10 CFR Part 50, and the design objectives given in Section II.0 of Appendix I to 10 CFR Part 50. The specified limits governing the use of appropriate portions of the systems were specified as a suitable fraction of the dose design objectives set forth in Sections II.B and II.C of Appendix I, 10 CFR Part 50, for gaseous effluents.

B 12.4 GASEOUS EFFLUENTS AND TOTAL DOSE

B 12.4.5 VENTILATION EXHAUST TREATMENT SYSTEM

BASES

The OPERABILITY of the VENTILATION EXHAUST TREATMENT SYSTEM ensures that the system will be available for use whenever gaseous effluents require treatment prior to release to the environment. The requirement that the appropriate portions of these systems be used, when specified, provides reasonable assurance that the releases of radioactive materials in gaseous effluents will be kept "as low as is reasonably achievable". This specification implements the requirements of 10 CFR Part 50.36a, General Design Criterion 60 of Appendix A to 10 CFR Part 50, and the design objectives given in Section II.0 of Appendix I to 10 CFR Part 50. The specified limits governing the use of appropriate portions of the systems were specified as a suitable fraction of the dose design objectives set forth in Sections II.B and II.C of Appendix I, 10 CFR Part 50, for gaseous effluents. This control implements Technical Specification 5.5.4.f for gaseous effluents.

B 12.4 GASEOUS EFFLUENTS AND TOTAL DOSE

B 12.4.6 MARK II CONTAINMENT

BASES

This control provides reasonable assurance that releases from drywell purging operations will not exceed the annual dose limits of 10 CFR 20 for unrestricted areas.

B 12.4 GASEOUS EFFLUENTS AND TOTAL DOSE

B 12.4.7 Total Dose

BASES

This control is provided to meet the dose limitations of 40 CFR 190. The specification requires the preparation and submittal of a report whenever the calculated doses from plant radioactive effluents exceed twice the design objective doses of Appendix I. For sites containing up to 4 reactors, it is highly unlikely that the resultant dose to a member of the public will exceed the dose limits of 40 CFR 190 if the individual reactors remain within the reporting requirement level. The report will describe a course of action that should result in the limitation of dose to a member of the public for 12 consecutive months to within the 40 CFR 190 limits. For the purpose of the report, it may be assumed that the dose commitment to the member of the public from other uranium fuel cycle sources is negligible, with the exception that dose contributions from other nuclear fuel cycle facilities at the same site or within a radius of 5 miles must be considered. If the dose to any member of the public is estimated to exceed the requirements of 40 CFR 190, the report with a request for a variance (provided the release conditions resulting in violation of 40 CFR 190 have not already been corrected), in accordance with the provisions of 40 CFR 190.11, is considered to be a timely request and fulfills the requirements of 40 CFR 190 until NRC staff action is completed. The variance only relates to the limits of 40 CFR 190, and does not apply in any way to the requirements for dose limitation of 10 CFR Part 20, as addressed in other sections of the RECS. An individual is not considered a member of the public during any period in which he/she is engaged in carrying out any operation that is part of the nuclear fuel cycle.

B 12.4 GASEOUS EFFLUENTS AND TOTAL DOSE

B 12.4.8 Main Condenser

BASES

This control provides reasonable assurance that the releases from the main condenser will not exceed the requirements of the LaSalle Technical Specifications 3.7.6. In addition, a sample is required within 4 hours if the increase is not due to thermal power changes. If the cause is known and not fuel related and less than 1 hour in duration, then no sample is required. [This is based on a letter from W. R. Huntington to Operating Engineers, Shift Engineers and F.R. Lawless, dated May 24, 1984.]

B 12.4 GASEOUS EFFLUENTS AND TOTAL DOSE

B 12.4.9 Dose Limits for MEMBERS OF THE PUBLIC

BASES

This control applies to direct exposure of radioactive materials as well as radioactive materials released in gaseous and liquid effluents. 10 CFR 20.1301 sets forth the 100 mrem/year dose limit to members of the public; 2 mrem in any one-hour limit in the unrestricted area; and reiterates that the licensee is also required to meet the 40 CFR 190 standards. 10 CFR 20.1302 provides options to determine compliance to 10 CFR 20.1301. Compliance to the above operability requirement is based on 10 CFR 20, 40 CFR 190 and LaSalle Station Technical Specification 5.5.4.g. The Effluents Program shall implement monitoring, sampling, and analysis of radioactive liquid and gaseous effluents in accordance with 10 CFR 20.1302 and with the methodology and parameters of the ODCM.

B 12.5 RADIOLOGICAL ENVIRONMENTAL MONITORING PROGRAM

B 12.5.1 Radiological Environmental Monitoring Program

BASES

The Radiological Environmental Monitoring Program required by this section provides representative measurements of radiation and of radioactive materials in those exposure pathways and for those radionuclides that lead to the highest potential radiation exposures of MEMBERS OF THE PUBLIC resulting from the station operation. This monitoring program implements Section IV.B.2 of Appendix I to 10 CFR Part 50 and thereby supplements the radiological effluent monitoring program by verifying that the measurable concentrations of radioactive materials and levels of radiation are not higher than expected on the basis of the effluent measurements and the modeling of the environmental exposure pathways. Guidance for this monitoring program is provided by the Radiological Assessment Branch Technical Position on Environmental Monitoring. The initially specified monitoring program will be effective for at least the first 3 years of commercial operation. Following this period, program changes may be initiated based on operational experience.

The required detection capabilities for environmental sample analyses are tabulated in terms of the lower limits of detection (LLDs). The LLDs required by Table R 12.5.1-3 are considered optimum for routine environmental measurements in industrial laboratories. It should be recognized that the LLD is defined as a before the fact limit representing the capability of a measurement system and not as an after the fact limit for a particular measurement.

Detailed discussion of the LLD, and other detection limits, can be found in HASL Procedures Manual, HASL-300 (revised annually), Currie, LA., "Limits for Qualitative Detection and Quantitative Determination - Application to Radiochemistry," Anal. Chem. 40, 586-93 (1968), and Hartwell, J.K., "Detection Limits for Radioanalytical Counting Techniques," Atlantic Richfield Hanford Company Report ARH-SA-215 (June 1975).

Table R12.5.1-1 requires "one sample of each community drinking water supply downstream of the plant within 10 kilometers." Drinking water supply is defined as water taken from rivers, lakes, or reservoirs (not well water) that is used for drinking.

B 12.5 RADIOLOGICAL ENVIRONMENTAL MONITORING PROGRAM

B 12.5.2 Land Use Census

BASES

This control is provided to ensure that changes in the use of areas at and beyond the SITE BOUNDARY are identified and that modifications to the Radiological Environmental Monitoring Program given in the ODCM are made if required by the results of this census. This census satisfies the requirements of Section IV.B.3 of Appendix I to 10 CFR Part 50. An annual garden census will not be required since the licensee will assume that there is a garden at the nearest residence in each sector for dose calculations.

B 12.5 RADIOLOGICAL ENVIRONMENTAL MONITORING PROGRAM

B 12.5.3 Interlaboratory Comparison Program

BASES

The requirement for participation in an Interlaboratory Comparison Program is provided to ensure that independent checks on the precision and accuracy of the measurements of radioactive material in environmental samples matrices are performed as part of the quality assurance program for environmental monitoring in order to demonstrate that the results are valid for the purposes of Section IV.B.2 of Appendix I to 10 CFR Part 50.

B 12.5 RADIOLOGICAL ENVIRONMENTAL MONITORING PROGRAM

B 12.5.4 Meteorological Monitoring Program (NOT APPLICABLE)

OFFSITE DOSE CALCULATION MANUAL

PART II

LASALLE STATION
Units 1 and 2

Revison 0

1.0 INTRODUCTION - ODCM GENERAL INFORMATION

The Offsite Dose Calculation Manual (ODCM) presents a discussion of the following:

- The basic concepts applied in calculating offsite doses from plant effluents.
- The regulations and requirements for the ODCM and related programs.
- The methodology and parameters for the offsite dose calculations to assess impact on the environment and compliance with regulations.

The methodology detailed in this manual is intended for the calculation of radiation doses during routine (i.e., non-accident) conditions. The calculations are normally performed using a computer program. Manual calculations may be performed in lieu of the computer program.

The dose effects of airborne radioactivity releases predominately depend on meteorological conditions (wind speed, wind direction, and atmospheric stability). For airborne effluents, the dose calculations prescribed in this manual are based on historical average atmospheric conditions. This methodology is appropriate for estimating annual average dose effects and is stipulated in the Bases Section of the Radiological Effluents Controls (RECS).

1.1 Structure of the ODCM

Part I of the ODCM is considered to be the Radiological Effluents Controls (RECS), and contains the former Radiological Effluent Technical Specifications that have been removed from the Technical Specifications. Part I is organized as follows:

1- Definitions
2- Not Used
3- Controls
4- Surveillance Requirements
(Note: Sections 3 and 4 are presented together as 3/4)
   0. Control and Surveillance Requirements
   1. Radioactive Liquid Effluent Monitoring Instrumentation
   2. Radioactive Gaseous Effluent Monitoring Instrumentation
   3. Radioactive Liquid Effluents
   4. Radioactive Gaseous Effluents
   5. Total Dose
   6. Radiological Environmental Monitoring Program
   7. Land Use Census
   8. Inter-Laboratory Comparison Program
   9. Meteorological Monitoring Program
5- Bases
6- Administrative Requirements

Part II of the ODCM is considered to be the Offsite Dose Calculation Manual (ODCM), and contains methods, equations, assumptions, and parameters for calculation of radiation doses from plant effluents. Part II is organized as follows:

1- Introduction
2- Instrumentation and Systems
3- Liquid Effluents
4- Gaseous Effluents
5- Total Dose
6- Radiological and Environmental Monitoring Program

1.2 Regulations

This section serves to illustrate the regulations and requirements that define and are applicable to the ODCM. Any information provided in the ODCM concerning specific regulations are not a substitute for the regulations as found in the Code of Federal Regulations (CFR) or Technical Specifications.

1.2.1 Code of Federal Regulations

Various sections of the Code of Federal Regulations (CFR) require nuclear power stations to be designed and operated in a manner that limits the radiation exposure to members of the public. These sections specify limits on offsite radiation doses and on effluent radioactivity concentrations and they also require releases of radioactivity to be "As Low As Reasonably Achievable". These requirements are contained in 10CFR20, 10CFR50 and 40CFR190. In addition, 40CFR141 imposes limits on the concentration of radioactivity in drinking water provided by the operators of public water systems.

- <u>10CFR20, Standards for Protection Against Radiation</u>

  This revision of the ODCM addresses the requirements of 10CFR20. The 10CFR20 dose limits are summarized in Table 1 - 1.

- <u>Design Criteria (Appendix A of 10CFR50)</u>

  Section 50.36 of 10CFR50 requires that an application for an operating license include proposed Technical Specifications. Final Technical Specifications for each station are developed through negotiation between the applicant and the NRC. The Technical Specifications are then issued as a part of the operating license, and the licensee is required to operate the facility in accordance with them.

  Section 50.34 of 10CFR50 states that an application for a license must state the principal design criteria of the facility. Minimum requirements are contained in Appendix A of 10CFR50.

- ALARA Provisions (Appendix I of 10CFR50)

  Sections 50.34a and 50.36a of 10CFR50 require that the nuclear plant design and the station RECS have provisions to keep levels of radioactive materials in effluents to unrestricted areas "As Low As Reasonably Achievable" (ALARA). Although 10CFR50 does not impose specific limits on releases, Appendix I of 10CFR50 does provide numerical design objectives and suggested limiting conditions for operation. According to Section I of Appendix I of 10CFR50, design objectives and limiting conditions for operation, conforming to the guidelines of Appendix I "shall be deemed a conclusive showing of compliance with the "As Low As Reasonably Achievable" requirements of 10CFR50.34a and 50.36a."

  An applicant must use calculations to demonstrate conformance with the design objective dose limits of Appendix I. The calculations are to be based on models and data such that the actual radiation exposure of an individual is "unlikely to be substantially underestimated" (see 10CFR50 Appendix I, Section III.A.1).

  The guidelines in Appendix I call for an investigation, corrective action and a report to the NRC whenever the calculated dose due to the radioactivity released in a calendar quarter exceeds one-half of an annual design objective. The guidelines also require a surveillance program to monitor releases, monitor the environment and identify changes in land use.

- 40CFR190, Environmental Radiation Protection Standards for Nuclear Power Operations

  Under an agreement between the NRC and the EPA, the NRC stipulated to its licensees in Generic Letter 79-041 that "Compliance with Radiological Effluent Technical Specifications (RETS), NUREG-0473 (Rev.2) for BWR's, implements the LWR provisions to meet 40CFR190". (See Reference 103 and 49.)

  The regulations of 40CFR190 limit radiation doses received by members of the public as a result of operations that are part of the uranium fuel cycle. Operations must be conducted in such a manner as to provide reasonable assurance that the annual dose equivalent to any member of the public due to radiation and to planned discharges of radioactive materials does not exceed the following limits:

  - 25 mrem to the total body
  - 75 mrem to the thyroid
  - 25 mrem to any other organ

An important difference between the design objectives of 10CFR50 and the limits of 40CFR190 is that 10CFR50 addresses only doses due to radioactive effluents. 40CFR190 limits doses due to effluents and to radiation sources maintained on site. See Section 1.2.4 for further discussion of the differences between the requirements of 10CFR50 Appendix I and 40CFR190.

- 40CFR141, National Primary Drinking Water Regulations

  The following radioactivity limits for community water systems were established in the July, 1976 Edition of 40CFR141:

  - Combined Ra-226 and Ra-228: $\leq$ 5 pCi/L.
  - Gross alpha (particle activity including Ra-226 but excluding radon and uranium): $\leq$ 15 pCi/L.
  - The average annual concentration of beta particle and photon radioactivity from man-made radionuclides in drinking water shall not produce an annual dose equivalent to the total body or any internal organ greater than 4 mrem/yr.

  The regulations specify procedures for determining the values of annual average radionuclide concentration that produce an annual dose equivalent of 4 mrem. Radiochemical analysis methods are also specified. The responsibility for monitoring radioactivity in a community water system falls on the supplier of the water. The LaSalle Station has requirements related to 40CFR141 in the RECS.

1.2.2 Radiological Effluent Technical Standards

The Radiological Effluent Technical Standards (RETS) were formerly a subset of the Technical Specifications. They implement provisions of the Code of Federal Regulations aimed at limiting offsite radiation dose. The NRC published Standard RETS for BWRs (Reference 3) as guidance to assist in the development of technical specifications. These documents have undergone frequent minor revisions to reflect changes in plant design and evolving regulatory concerns. The RETS have been removed from the Technical Specifications and placed in the ODCM as the RECS (see Reference 90). The RECS are similar but not identical to the guidance of the Standard Radiological Effluent Technical Specifications.

1.2.3 Offsite Dose Calculation Manual

The NRC in Generic Letter 89-01 defines the ODCM as follows (not verbatim) (see Reference 90):

> The Offsite Dose Calculation Manual (ODCM) shall contain the methodology and parameters used in the calculation of offsite doses resulting from radioactive gaseous and liquid effluents, in the calculation of gaseous and liquid effluent monitoring Alarm/Trip Setpoints, and in the conduct of the Radiological Environmental Monitoring Program. The ODCM shall also contain (1) the Radioactive Effluent Controls and Radiological Environmental Monitoring Programs and (2) descriptions of the Information that should be included in the Annual Radiological Environmental Operating and Annual Radioactive Effluent Release Reports.

Additional requirements for the content of the ODCM are contained throughout the text of the RECS.

1.2.4 Overlapping Requirements

In 10CFR20, 10CFR50 and 40CFR190, there are overlapping requirements regarding offsite radiation dose and dose commitment to the total body. In 10CFR20.1301, the total effective dose equivalent (TEDE) to a member of the public is limited to 100 mrem per calendar year. In addition, Appendix I to 10CFR50 establishes design objectives on annual total body dose or dose commitment of 3 mrem per reactor for liquid effluents and 5 mrem per reactor for gaseous effluents (see 10CFR50 Appendix I, Sections II.A and II.B.2(a)). Finally, 40CFR190 limits annual total body dose or dose commitment to a member of the public to 25 mrem due to all uranium fuel cycle operations.

While these dose limits/design objectives appear to overlap, they are different and each is addressed separately by the RETS. Calculations are made and reports are generated to demonstrate compliance to all regulations. Refer to Table 1 - 1 and Table 1 - 2 for additional information regarding instantaneous effluent limits, design objectives and regulatory compliance.

1.2.5 Dose Receiver Methodology

Table 1 - 2 lists the location of the dose recipient and occupancy factors, if applicable. Dose is assessed at the location in the unrestricted area where the combination of existing pathways and receptor age groups indicates the maximum potential exposures. The dose calculation methodology is consistent with the methodology of Regulatory Guide 1.109 (Reference 6) and NUREG 0133 (Reference 14). Dose is therefore calculated to a maximum individual. The maximum individual is characterized as "maximum" with regard to food consumption, occupancy and other usage of the area in the vicinity of the plant site. Such a "maximum individual" represents reasonable deviation from the average for the population in general. In all physiological and metabolic respects, the maximum individual is assumed to have those characteristics that represent averages for their corresponding age group. Thus, the dose calculated is very conservative compared to the "average" (or typical) dose recipient who does not go out of the way to maximize radioactivity uptakes and exposure.

Table 1 - 1
Regulatory Dose Limit Matrix

REGULATION	DOSE TYPE		DOSE LIMIT(s)		ODCM Section
Airborne Releases:			(quarterly)	(annual)	
10CFR50 App. I[3]	Gamma Dose to Air due to Noble Gas Radionuclides (per reactor unit)		5 mrad	10 mrad	4.2.2.1
	Beta Dose to Air Due to Noble Gas Radionuclides (per reactor unit)		10 mrad	20 mrad	4.2.2.2
	Organ Dose Due to Specified Non-Noble Gas Radionuclides (per reactor unit)		7.5 mrem	15 mrem	4.2.3
	Total Body and Skin Dose (if air dose is exceeded)	Total Body	2.5 mrem	5 mrem	4.2.2.3
		Skin	7.5 mrem	15 mrem	4.2.2.4
Technical Specifications	Total Body Dose Rate Due to Noble Gas Radionuclides (instantaneous limit, per site)		500 mrem/yr		4.2.1.1
	Skin Dose Rate Due to Noble Gas Radionuclides (instantaneous limit, per site)		3,000 mrem/yr		4.2.1.2
	Organ Dose Rate Due to Specified Non-Noble Gas Radionuclides (instantaneous limit, per site)		1,500 mrem/yr		4.2.1.3
Liquid Releases:			(quarterly)	(annual)	
10CFR50 App. I[3]	Whole (Total) Body Dose (per reactor unit)		1.5 mrem	3 mrem	3.4
	Organ Dose (per reactor unit)		5 mrem	10 mrem	3.4
Technical Specifications	The concentration of radioactivity in liquid effluents released to unrestricted areas		Ten times the values listed in 10CFR20 Appendix B; Table 2, Column 2, and in note 5 below for Noble Gases		3.2
Total Doses [1]:					
10 CFR 20.1301 (a)(1)	Total Effective Dose Equivalent [4]		100 mrem/yr		5.2
10CFR20.1301 (d) And 40CFR190	Total Body Dose		25 mrem/yr		5.2
	Thyroid Dose		75 mrem/yr		5.2
	Other Organ Dose		25 mrem/yr		5.2
Other Limits [2]:					
40CFR141	Total Body Dose Due to Drinking Water From Public Water Systems		4 mrem/yr		3.4
	Organ Dose Due to Drinking Water From Public Water Systems		4 mrem/yr		3.4

1 These doses are calculated considering all sources of radiation and radioactivity in effluents.
2 These limits are not directly applicable to nuclear power stations. They are applicable to the owners or operators of public water systems. However, the LaSalle RECS requires assessment of compliance with these limits.
3 Note that 10CFR50 provides design objectives, not limits.
4 Compliance with 10CFR20.1301(a)(1) is demonstrated by compliance with 40CFR190. Note that it may be necessary to address dose from on-site activity by members of the public as well.
5 Kr-85m, Kr-85, Kr-87, Kr-88, Ar-41, Xe-131m, Xe-133m, Xe-133, Xe-135m and Xe-135 allowable concentration is 2E-4, 5E-4, 4E-5, 9E-5, 7E-5, 7E-4, 5E-4, 6E-4, 2E-4 and 2E-4 µCi/ml, respectively, computed from Equation 17 of ICRP Publication 2 adjusted for infinite cloud submersion in water, and R = 0.01 rem/wk, ρ_w = 1.0 g/cm3, and P_w/P_t = 1.0.

Table 1 - 2
Dose Assessment Receivers

Dose Component or Pathway	Location; Occupancy if Different than 100%
"Instantaneous" dose rates from airborne radioactivity	Unrestricted area boundary location that results in the maximum dose rate
"Instantaneous" concentration limits in liquid effluents	Point where liquid effluents enter the unrestricted area
Annual average concentration limits for liquid effluents	Point where liquid effluents enter the unrestricted area
Direct dose from contained sources	Receiver spends part of this time in the controlled area and the remainder at his residence or fishing nearby; occupancy factor is considered and is site-specific.
Direct dose from airborne plume	Receiver is at the unrestricted area boundary location that results in the maximum dose.
Dose due to radioiodines, tritium and particulates with half-lives greater than 8 days for inhalation, ingestion of vegetation, milk and meat, and ground plane exposure pathways.	Receiver is at the location in the unrestricted area where the combination of existing pathways and receptor age groups indicates the highest potential exposures.
Ingestion dose from drinking water	The drinking water pathway is considered as an additive dose component in this assessment only if the public water supply serves the community immediately adjacent to the plant.
Ingestion dose from eating fish	The receiver eats fish from the receiving body of water
Total Organ Doses	Summation of ingestion/inhalation doses
Total Dose	Summation of above data (Note it may also be necessary to address dose from on-site activity by members of the public.)

Figure 1 - 1 illustrates some of the potential radiation exposure pathways to humans due to routine operation of a nuclear power station.

Figure 1 - 1
Radiation Exposure Pathways to Humans

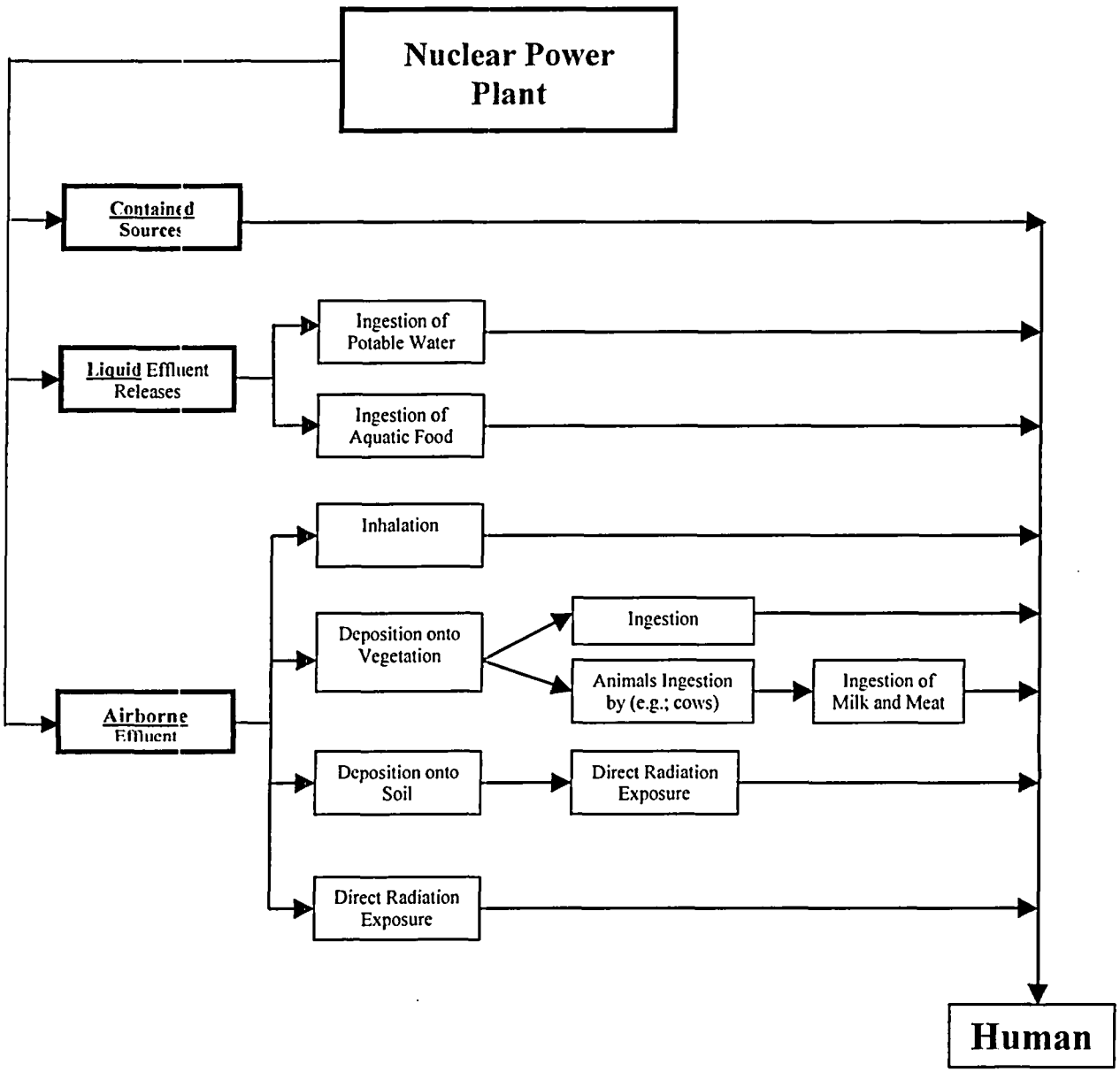

1.3 Offsite Dose Calculation Parameters

This section contains offsite dose calculation parameter factors, or values not specific only to one of the gas, liquid, or total dose chapters. Additional parameters are provided in the Sections 2, 4 and 5 of the ODCM.

10CFR50 Dose Commitment Factors

With the exception of H-3, the dose commitment factors for 10CFR50 related calculations are exactly those provided in Regulatory Guide 1.109 (Reference 6). The following table lists the parameters and the corresponding data tables in the RG 1.109:

PATHWAY	ADULT	TEENAGER	CHILD	INFANT
Inhalation	RG 1.109: Table E-7	RG 1.109: Table E-8	RG 1.109: Table E-9	RG 1.109: Table E-10
Ingestion	RG 1.109: Table E-11	RG 1.109: Table E-12	RG 1.109: Table E-13	RG 1.109: Table E-14

These tables are contained in Regulatory Guide 1.109 (Reference 6). Each table (E-7 through E-14) provides dose factors for seven organs for each of 73 radionuclides, and Table E-5 lists Miscellaneous Dose Assessment Factors - Consumption Parameters. For radionuclides not found in these tables, dose factors will be derived from ICRP 2 (Reference 50) or NUREG-0172 (Reference 51). The values for H-3 are taken from NUREG-4013 (Reference 107).

1.4 References

The references listed below were transferred from the previous ODCM revision that was common to all former Commonwealth Edison nuclear stations. The references not applicable to LaSalle Station have been deleted, however the numbering has been preserved for ease of reference management throughout the ODCM document; therefore, reference numbering is not sequential.

3. U.S. Nuclear Regulatory Commission, Standard Radiological Effluent Technical Specifications for Boiling Water Reactors, NUREG-0473, Rev. 3, Draft, September 1982 (frequently revised).

4. U.S. Nuclear Regulatory Commission, Measuring, Evaluating, and Reporting Radioactivity in Solid Wastes and Releases of Radioactive Materials in Liquid and Gaseous Effluents from Light-Water-Cooled Nuclear Power Plants, Regulatory Guide 1.21. Revision 1, June 1974.

5. U.S. Nuclear Regulatory Commission, Onsite Meteorological Programs, Regulatory Guide 1.23, Safety Guide 23, February 17, 1972.

6. U.S. Nuclear Regulatory Commission, Calculation of Annual Doses to Man from Routine Releases of Reactor Effluents for the Purpose of Evaluating Compliance with 10 CFR Part 50 Appendix I, Regulatory Guide 1.109, Rev. 1, October 1977.

7. U.S. Nuclear Regulatory Commission, Methods for Estimating Atmospheric Transport and Dispersion of Gaseous Effluents in Routine Releases from Light-Water-Cooled Reactors, Regulatory Guide 1.111, Rev. 1, July 1977.

8. U.S. Nuclear Regulatory Commission, Calculation of Releases of Radioactive Materials in Gaseous and Liquid Effluents from Light-Water-Cooled Power Reactors, Regulatory Guide 1.112, Rev. 0-R, April 1976; reissued May 1977.

9. U.S. Nuclear Regulatory Commission, Estimating Aquatic Dispersion of Effluents from Accidental and Routine Reactor Releases for the Purpose of Implementing Appendix I, Regulatory Guide 1.113, Rev. 1, April 1977.

10. U.S. Nuclear Regulatory Commission, Programs for Monitoring Radioactivity in the Environs of Nuclear Power Plants, Regulatory Guide 4.1, Rev. 1, April 1975.

11. U.S. Nuclear Regulatory Commission, Preparation of Environmental Reports for Nuclear Power Stations, Regulatory Guide 4.2, Rev. 2, July 1976.

12. U.S. Nuclear Regulatory Commission, Environmental Technical Specifications for Nuclear Power Plants, Regulatory Guide 4.8, Rev. 1, December 1975. (See also the related Radiological Assessment Branch Technical Position, Rev. 1, November 1979.)

13. U.S. Nuclear Regulatory Commission, Quality Assurance for Radiological Monitoring Programs (Normal Operations)--Effluent Streams and the Environment, Regulatory Guide 4.15, Rev. 1, February 1979.

14. U.S. Nuclear Regulatory Commission, Preparation of Radiological Effluent Technical Specifications for Nuclear Power Plants, edited by J. S. Boegli et al. NUREG-0133, October 1978.

15. U.S. Nuclear Regulatory Commission, XOQDOQ: Computer Program for the Meteorological Evaluation of Routine Effluent Releases at Nuclear Power Stations, J. F. Sagendorf et al. NUREG/CR-2919, PNL-4380, September 1982.

16. U.S. Nuclear Regulatory Commission, Radiological Assessment, edited by J. E. Till and H. R. Meyer, NUREG/CR-3332, ORNL-5968, September 1983.

17. U.S. Nuclear Regulatory Commission, Standard Review Plan, NUREG-0800, July 1981.

18. U.S. Atomic Energy Commission, Meteorology and Atomic Energy 1968, edited by D. H. Slade, TID-21940, July 1968.

19. U.S. Atomic Energy Commission, Plume Rise, G. A. Briggs, TID-25075, 1969.

20. U.S. Atomic Energy Commission, The Potential Radiological Implications of Nuclear Facilities in the Upper Mississippi River Basin in the Year 2000, WASH 1209, January 1973.

21. U.S. Atomic Energy Commission, HASL Procedures Manual, Health and Safety Laboratory, HASL-300 (revised annually).

22. U.S. Department of Energy, Models and Parameters for Environmental Radiological Assessments, edited by C. W. Miller, DOE/TIC-11468, 1984.

23. U.S. Department of Energy, Atmospheric Science and Power Production, edited by D. Randerson, DOE/TIC-27601, 1984.

24. U.S. Environmental Protection Agency, Workbook of Atmospheric Dispersion Estimates, D. B. Turner, Office of Air Programs Publication No. AP-26, 1970.

25. U.S. Environmental Protection Agency, 40CFR190 Environmental Radiation Protection Requirements for Normal Operations of Activities in the Uranium Fuel Cycle, Final Environmental Statement, EPA 520/4-76-016, November 1, 1976.

26. U.S. Environmental Protection Agency, Environmental Analysis of the Uranium Fuel Cycle, EPA-520/9-73-003-C, November 1973.

27. American Society of Mechanical Engineers, Recommended Guide for the Prediction of the Dispersion of Airborne Effluents, 1973.

28. Eisenbud, M., Environmental Radioactivity, 3rd Edition, (Academic Press, Orlando, FL, 1987).

29. Glasstone, S., and Jordan, W. H., Nuclear Power and Its Environmental Effects (American Nuclear Society, LaGrange Park, IL, 1980).

30. International Atomic Energy Agency, Generic Models and Parameters for Assessing the Environmental Transfer of Radionuclides from Routine Releases, Safety Series, No. 57, 1982.

31. National Council on Radiation Protection and Measurements, Radiological Assessment: Predicting the Transport, Bioaccumulation, and Uptake by Man of Radionuclides Released to the Environment, NCRP Report No. 76, March 15, 1984.

32. American National Standards Institute, Guide to Sampling Airborne Radioactive Materials in Nuclear Facilities, ANSI N13.1-1969, February 19, 1969.

33. Institute of Electrical and Electronics Engineers, Specification and Performance of On-Site Instrumentation for Continuously Monitoring Radioactivity in Effluents, ANSI N13.10-1974, September 19, 1974.

34. American National Standards Institute, Testing and Procedural Specifications for Thermoluminescence Dosimetry (Environmental Applications), ANSI N545-1975, August 20, 1975.

35. American Nuclear Insurers, Effluent Monitoring, ANI/MAELU Engineering Inspection Criteria for Nuclear Liability Insurance, Section 5.1, Rev. 2, October 24, 1986.

36. American Nuclear Insurers, Environmental Monitoring, ANI/MAELU Engineering Inspection Criteria for Nuclear Liability Insurance, Section 5.2, Rev. 1, March 23, 1987.

37. American Nuclear Insurers, Environmental Monitoring Programs, ANI/MAELU Information Bulletin 86-1, June 9, 1986.

38. Cember, H., Introduction to Health Physics, 2nd Edition (Pergamon Press, Elmsford, NY 1983).

39. Electric Power Research Institute, Guidelines for Permanent BWR Hydrogen Water Chemistry Installations--1987 Revision, EPRI NP-5283-SR-A, Special Report, September 1987.

40. Commonwealth Edison Company, Information Relevant to Keeping Levels of Radioactivity in Effluents to Unrestricted Areas As Low As Reasonably Achievable, LaSalle County Station, Units 1 and 2, June 4, 1976.

41. U.S. Nuclear Regulatory Commission, Branch Technical Position, Radiological Assessment Branch, Revision 1, November 1979. (This is a branch position on Regulatory Guide 4.8.)

44. U.S. Nuclear Regulatory Commission, Calculation of Releases of Radioactive Materials in Gaseous and Liquid Effluents from Boiling Water Reactors (BWR-GALE Code), NUREG-0016, April 1976.

45. Sargent & Lundy, N-16 Skyshine from BWR Turbine Systems and Piping, NSLD Calculation No. D2-2-85, Rev. 0, 2/1/85.

47. Sargent & Lundy Calculation ATD-0139, Rev. 0, N-16 Skyshine Ground Level Dose from LaSalle Turbine Systems and Piping, July 28, 1992.

49. U.S. Nuclear Regulatory Commission, Methods for Demonstrating LWR Compliance with the EPA Uranium Fuel Cycle Standard (40 CFR Part 190), NUREG-0543, February 1980.

50. International Commission on Radiological Protection, Report of Committee Two on Permissible Dose for Internal Radiation, Recommendations of the International Commission on Radiological Protection, ICRP Publication 2, 1959.

51. U.S. Nuclear Regulatory Commission, Age-Specific Radiation Dose Commitment Factors for a One-Year Chronic Intake, Battelle Pacific Northwest Laboratories, NUREG-0172, 1977.

52. W. C. Ng, Transfer Coefficients for Prediction of the Dose to Man via the Forage-Cow-Milk Pathway from Radionuclides Released to the Biosphere, UCRL-51939.

53. E. C. Eimutis and M. G. Konicek, Derivations of Continuous Functions for the Lateral and Vertical Atmospheric Dispersion Coefficients, Atmospheric Environment 6, 859 (1972).

54. D. C. Kocher, Editor, Nuclear Decay Data for Radionuclides Occurring in Routine Releases from Nuclear Fuel Cycle Facilities, ORNL/NUREG/TM-102, August 1977.

55. R. L. Heath, Gamma-Ray Spectrum Catalog, Aerojet Nuclear Co., ANCR-1000-2, third or subsequent edition.

56. S. E. Thompson, Concentration Factors of Chemical Elements in Edible Aquatic Organisms, UCRL-50564, Rev. 1, 1972.

57. U.S. Nuclear Regulatory Commission, Instruction Concerning Risks from Occupational Radiation Exposure, Regulatory Guide 8.29, July 1981.

60. Sargent & Lundy Calculation ATD-0173, Rev. 0, 9/21/92, Annual Dose to Members of the Public Due to the LaSalle IRSF.

68. Sargent & Lundy Calculation ATD-0183, Rev. 0, 9/25/92, Dose Information Around LaSalle DAW Sea/Land Van Storage Area.

70. D. C. Kocher, Radioactivity Decay Data Tables, DOE/TIC-11026, 1981.

71. J. C. Courtney, A Handbook of Radiation Shielding Data, ANS/SD-76/14, July 1976.

75. Sargent & Lundy, METWRSUM, S&L Program Number 09.5.187-1.0.

76. Sargent & Lundy, Comments on CECo ODCM and List of S&L Calculations, Internal Office Memorandum, P. N. Derezotes to G. R. Davidson, November 23, 1988.

77. Sargent & Lundy, AZAP, A Computer Program to Calculate Annual Average Offsite Doses from Routine Releases of Radionuclides in Gaseous Effluents and Postaccident X/Q Values, S&L Program Number 09.8.054-1.7.

78. National Oceanic and Atmospheric Administration, A Program for Evaluating Atmospheric Dispersion from a Nuclear Power Station, J. F. Sagendorf, NOAA Technical Memorandum ERL ARL-42, Air Resources Laboratory, Idaho Falls, Idaho, May 1974.

79. G. P. Lahti, R. S. Hubner, and J. C. Golden, Assessment of Gamma-Ray Exposures Due to Finite Plumes, Health Physics 41, 319 (1981).

80. National Council of Radiation Protection and Measurements, Ionizing Radiation Exposure of the Population of the United States, NCRP Report No. 93, September 1, 1987.

82. W. R. Van Pelt (Environmental Analysts, Inc.), Letter to J. Golden (Exelon Nuclear) dated January 3, 1972.

83. Electric Power Research Institute, Radiological Effects of Hydrogen Water Chemistry, EPRI NP-4011, May 1985.

84. U.S. Nuclear Regulatory Commission, Draft Generic Environmental Impact Statement on Uranium Milling, NUREG-0511, April 1979.

85. U.S. Environmental Protection Agency, Environmental Analysis of the Uranium Fuel Cycle, Part I - Fuel Supply, EPA-520/9-73-003-B, October 1973.

86. U.S. Nuclear Regulatory Commission, Final Generic Environmental Statement on the Use of Recycle Plutonium in Mixed Oxide Fuel in Light Water Cooled Reactors, NUREG-0002, August 1976.

87. U.S. Nuclear Regulatory Commission, Demographic Statistics Pertaining to Nuclear Power Reactor Sites, NUREG-0348, Draft, December 1977.

88. Nuclear News 31, Number 10, Page 69 (August 1988).

89. General Electric Company, Irradiated Fuel Storage at Morris Operation, Operating Experience Report, January 1972 through December 1982, K. J. Eger, NEDO-20969B.

90. U.S. Nuclear Regulatory Commission, Generic Letter 89-01, "Guidance For The Implementation of Programmatic Controls For RETS In The Administrative Controls Section of Technical Specifications and the Relocation of Procedural Details of Current RETS to the Offsite Dose Calculation Manual or Process Control Program", January 1989.

92. NRC Safety Evaluation Report (SER)/Idaho Notional Engineering Laboratory Technical Evaluation Report (TER) of the Commonwealth Edison Offsite Dose Calculation Manual (ODCM), Revision O.A, December 2, 1991.

93. Federal Guidance Report 11

95. U.S. Nuclear Regulatory Commission, Standards for Protection Against Radiation (10CFR20).

96. U.S. Nuclear Regulatory Commission, Licensing of Production and Utilization Facilities (10CFR50).

97. Federal Register, Vol. 57, No. 169, Monday, August 31, 1992, page 39358.

98. Miller, Charles W., Models and Parameters for Environmental Radiological Assessments, U.S. Dept. of Energy, DE8102754, 1984, pages 32, 33, 48, and 49.

99. Kocher, D. C., "Dose-Rate Conversion Factors For External Exposure To Photons and Electrons", Health Physics Vol. 45, No. 3 (September), pp. 665-686, 1983.

100. U.S. Department of Health, Education and Welfare Public Health Service, Radiological Health Handbook, January 1970.

101. ODCM Bases and Reference Document, rev.0, November 1998.

103. U.S. Nuclear Regulatory Commission, Generic Letter 79-041, September 17, 1979.

104. Federal Register, Vol. 56, No. 98, Tuesday, May 21, 1991, page 23374, column 3.

106. U.S. Nuclear Regulatory Commission, Offsite Dose Calculation Manual Guidance: Standard Radiological Effluent Controls for Boiling Water Reactors, NUREG-1302, April 1991.

107. U.S. Nuclear Regulatory Commission, LADTAP II - Technical Reference and Users Guide, NUREG-4013, April 1986.

Table 1 - 3
Miscellaneous Dose Assessment Factors: Environmental Parameters

Parameter	Value	Comment	Equation	Basis[a]
f_g	0.76		4-11, 4-12	A
f_L	1.0		4-11, 4-12	A
f_p	1.0		4-13, 4-15	A
f_s	1.0		4-13, 4-15	A
t_b	262,800 hrs	30 years	4-9	C
t_f	48 hrs	Cow Milk Pathway	4-13	A
t_f	480 hrs	Cow Meat Pathway	4-15	A
t_h	1440 hrs	60 days for produce	4-11	A
t_h	2160 hrs	90 days for produce	4-13, 4-15	A
t_L	24 hrs	1 day for leafy vegetables	4-11	A
Q_F	50 Kg/day		4-13, 4-14, 4-15, 4-16	B
r	1.0	For Iodines	4-11, 4-13, 4-15	A
r	0.2	For Particulates	4-11, 4-13, 4-15	A
Y_p	0.7 Kg/m^2		4-13, 4-15	A
Y_s	2.0 Kg/m^2		4-13, 4-15	A
Y_v	2.0 Kg/m^2		4-11	A
λ_w	0.0021 hr^1		4-11, 4-13, 4-15	A
H	8 gm/m^3	Absolute Atmospheric Humidity	4-12, 4-14, 4-16	D

[a]Basis key:

A: Reference 6, Table E-15.
B: Reference 6, Table E-3.
C: The parameter t_b is taken as the midpoint of plant operating life (based upon an assumed 60 year plant operating lifetime).
D: Reference 14, Section 5.3.1.3.

Table 1 - 4
Stable Element Transfer Data

Element	F_f Meat (d/kg)	F_M(Cow) Milk (d/L)	Reference
H	1.2E-02	1.0E-02	6
Be	1.5E-03	3.2E-03	Footnote 1
C	3.1E-02	1.2E-02	6
F	2.9E-03	1.4E-02	Footnote 2
Na	3.0E-02	4.0E-02	6
Mg	1.5E-03	3.2E-03	Footnote 1
Al	1.5E-02	1.3E-03	Footnote 3
P	4.6E-02	2.5E-02	6
Cl	2.9E-03	1.4E-02	Footnote 2
Ar	NA	NA	NA
K	1.8E-02	7.2E-03	16
Ca	1.6E-03	1.1E-02	16
Sc	2.4E-03	7.5E-06	Footnote 4
Ti	3.4E-02	5.0E-06	Footnote 5
V	2.8E-01	1.3E-03	Footnote 6
Cr	2.4E-03	2.2E-03	6
Mn	8.0E-04	2.5E-04	6
Fe	4.0E-02	1.2E-03	6
Co	1.3E-02	1.0E-03	6
Ni	5.3E-02	6.7E-03	6
Cu	8.0E-03	1.4E-02	6
Zn	3.0E-02	3.9E-02	6
Ga	1.5E-02	1.3E-03	Footnote 3
Ge	9.1E-04	9.9E-05	Footnote 7
As	1.7E-02	5.0E-04	Footnote 8
Se	7.7E-02	1.0E-03	Footnote 9
Br	2.9E-03	2.2E-02	F_f Footnote 2;F_M from Ref. 16
Kr	NA	NA	NA
Rb	3.1E-02	3.0E-02	6
Sr	6.0E-04	8.0E-04	6
Y	4.6E-03	1.0E-05	6
Zr	3.4E-02	5.0E-06	6
Nb	2.8E-01	2.5E-03	6
Mo	8.0E-03	7.5E-03	6
Tc	4.0E-01	2.5E-02	6
Ru	4.0E-01	1.0E-06	6
Rh	1.5E-03	1.0E-02	6
Pd	5.3E-02	6.7E-03	Footnote 10
Cd	3.0E-02	2.0E-02	Footnote 11
In	1.5E-02	1.3E-03	Footnote 3
Sn	9.1E-04	9.9E-05	Footnote 7
Sb	5.0E-03	2.0E-05	98
Ag	1.7E-02	5.0E-02	6
Te	7.7E-02	1.0E-03	6
I	2.9E-03	6.0E-03	6
Xe	NA	NA	NA
Cs	4.0E-03	1.2E-02	6
Ba	3.2E-03	4.0E-04	6
La	2.0E-04	5.0E-06	6
Ce	1.2E-03	1.0E-04	6
Pr	4.7E-03	5.0E-06	6
Nd	3.3E-03	5.0E-06	6

Table 1 - 4 Cont'd)
Stable Element Transfer Data

Element	F_f Meat (d/kg)	F_M (Cow) Milk (d/L)	Reference
Pm	2.9E-04	2.0E-05	16
Sm	2.9E-04	2.0E-05	16
Eu	2.9E-04	2.0E-05	16
Gd	2.9E-04	2.0E-05	16
Dy	2.9E-04	2.0E-05	16
Er	2.9E-04	2.0E-05	16
Tm	2.9E-04	2.0E-05	16
Yb	2.9E-04	2.0E-05	16
Lu	2.9E-04	2.0E-05	16
Hf	3.4E-02	5.0E-06	Footnote 5
Ta	2.8E-01	1.3E-03	F_M - Ref.16; F_f -Footnote 6
W	1.3E-03	5.0E-04	6
Re	1.0E-01	1.3E-03	F_M - Ref.16; F_f -Footnote 12
Os	2.2E-01	6.0E-04	Footnote 13
Ir	7.3E-03	5.5E-03	Footnote 14
Pt	5.3E-02	6.7E-03	Footnote 10
Au	1.3E-02	3.2E-02	Footnote 15
Hg	3.0E-02	9.7E-06	F_M - Ref.16; F_f -Footnote 11
Tl	1.5E-02	1.3E-03	F_M - Ref.16; F_f -Footnote 3
Pb	9.1E-04	9.9E-05	98
Bi	1.7E-02	5.0E-04	98
Ra	5.5E-04	5.9E-04	98
Th	1.6E-06	5.0E-06	98
U	1.6E-06	1.2E-04	98
Np	2.0E-04	5.0E-06	6
Am	1.6E-06	2.0E-05	98

Notes:

1. NA = It is assumed that noble gases are not deposited on the ground.
2. Elements listed are those considered for 10CFR20 assessment and compliance.

Footnotes:

There are numerous F_f and F_M values that were not found in published literature. In these cases, the periodic table was used in conjunction with published values. The periodic table was used based on a general assumption that elements have similar characteristics when in the same column of the periodic table. The values of elements in the same column of the periodic table, excluding atomic numbers 58-71 and 90-103, were averaged then assigned to elements missing values located in the same column of the periodic table. This method was used for all columns where there were missing values except column 3A, where there was no data, hence, the average of column 2B and 4A were used.

1. Values obtained by averaging Reference 6 values of Ca, Sr, Ba and Ra.
2. F_f value obtained by assigning the Reference 6 value for I. F_M value obtained by averaging I (Ref. 6) and Br (Ref.16).
3. F_f values obtained by averaging Zn (Ref.6) and Pb (Ref. 98); there were no values for elements in the same column; an average is taken between values of columns 2B and 4A on the periodic table. F_M values obtained by using the value for Tl from Reference 16.
4. Values obtained by averaging Reference 6 values of Y and La.
5. Values obtained by assigning the Reference 6 value for Zr.
6. F_f values obtained from Ref. 6 value for Nb. F_M values obtained by averaging values for Nb (Ref.6) and Ta (Ref. 16).
7. Values obtained from the Reference 6 values for Pb.
8. Values obtained from the Reference 6 values for Bi.
9. Values obtained from the Reference 6 values for Te.
10. Values obtained from the Reference 6 values for Ni.
11. F_f values obtained from Ref. 6 values for Zn. F_M values obtained by averaging the Reference 6 values for Zn and Hg.
12. Values obtained by averaging Reference 6 values for Mn, Tc, Nd and Reference 98 value for U.
13. Values obtained by averaging Reference 6 values from Fe and Ru.
14. Values obtained by averaging Reference 6 values from Co and Rh.
15. Values obtained by averaging Reference 6 values from Cu and Ag.

Figure 1 – 2
Unrestricted Area Boundary

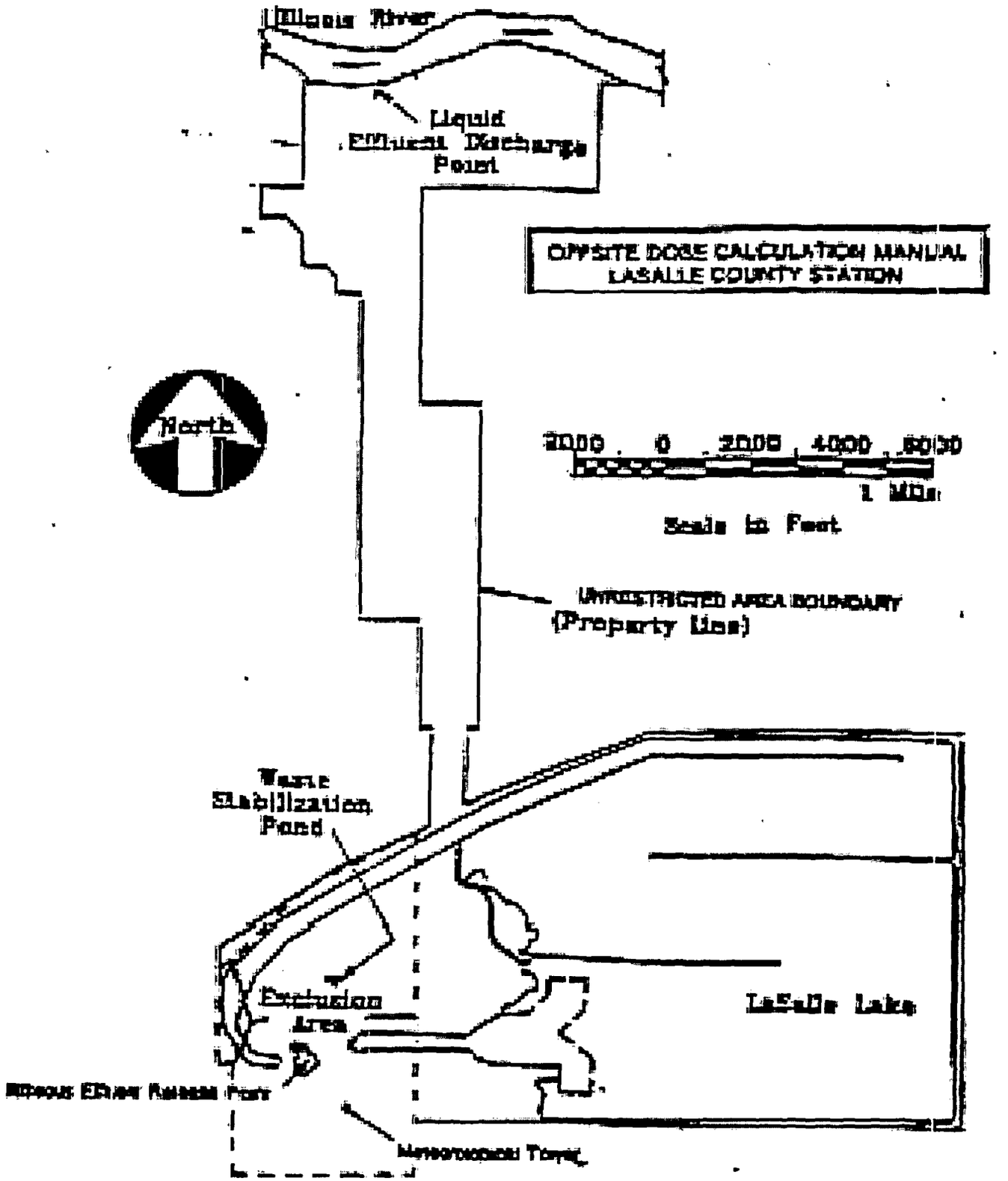

Figure 1 – 3
Restricted Area Boundary

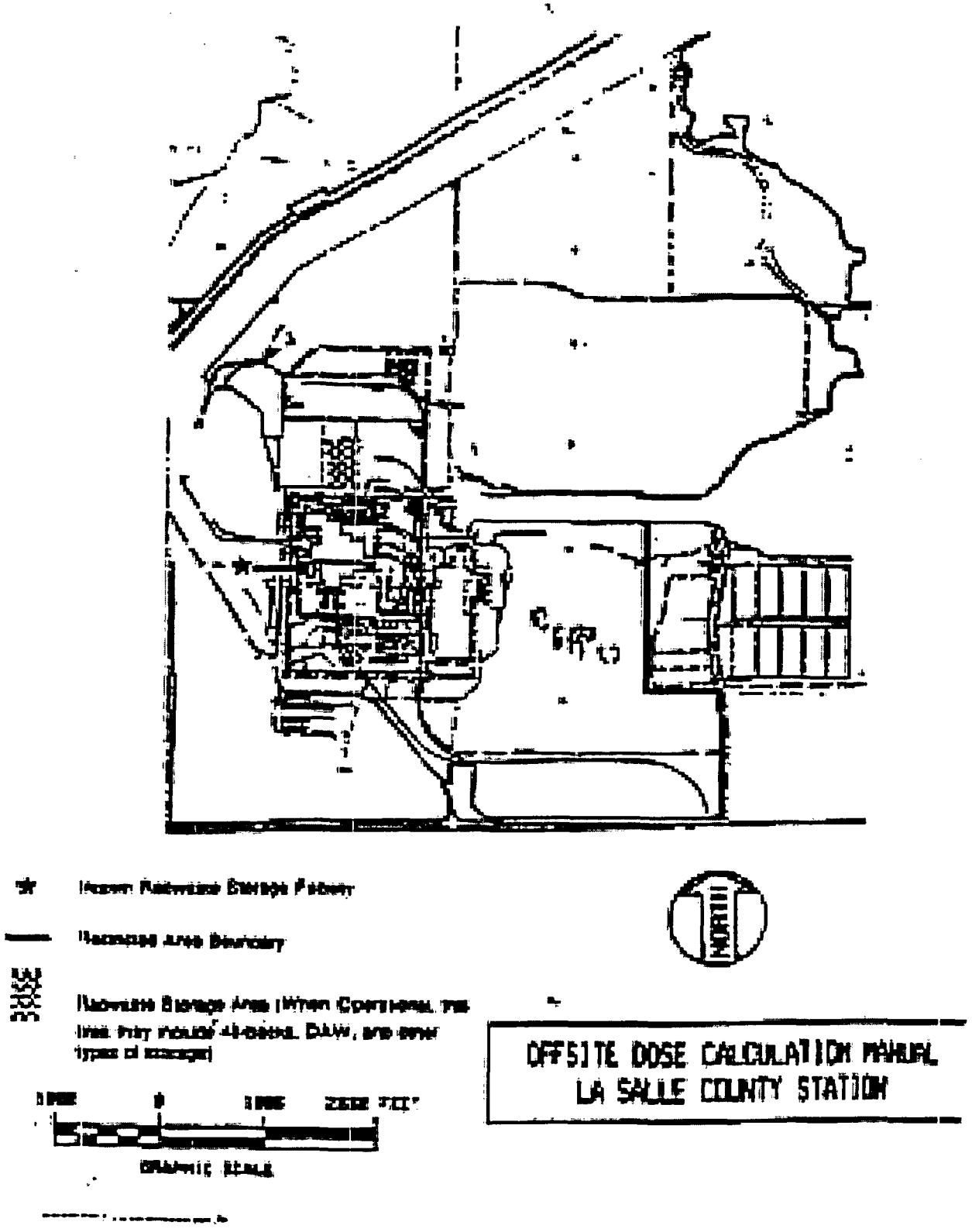

2.0 INSTRUMENATATION AND SYSTEMS

2.1 Liquid Releases

A simplified liquid radwaste and liquid effluent flow diagram are provided in Figures 2-2 and 2-3.

The liquid radwaste treatment system is designed and installed to reduce radioactive liquid effluents by collecting the liquids, providing for retention or holdup, and providing for treatment by filter or demineralizer for the purpose of reducing the total radioactivity prior to release to the environment. The system is described in Section 11.2.2 of the LaSalle UFSAR.

2.1.1 Radwaste Discharge Tanks

There are two discharge tanks (1(2)WF05T, 25,000 gallons each) which receive water for discharge to the Illinois River via the cooling lake blowdown.

2.1.2 Cooling Pond Blowdown

Cooling Pond Blowdown is the liquid discharge line to the Illinois River. The Cooling Pond Blowdown has a flow monitoring device as well as a compositor to meet the sampling requirements of Part I RECS Table R12.3.1-2.

2.2 Radiation Monitors

2.2.1 Liquid Radwaste Effluent Monitor

Monitor 0D18-K907 monitors all releases from the release tanks. On hi-hi alarm the monitor automatically initiates closure of valve 0WL067 and trips the radwaste discharge pump to terminate the release.

Pertinent information on the monitor and associated control devices is provided in LaSalle UFSAR Section 11.5.2.3.3.

2.2.2 Service Water Effluent Monitors

Monitors 1/(2)D18-K912 continuously monitor the service water effluent. On high alarm service water discharge may be terminated manually. No control device is initiated by these monitors.

Pertinent information on these monitors is provided in LaSalle UFSAR

2.2.3 RHR Heat Exchanger Cooling Water Effluent Monitors

Instrument channels 1/(2)D18-N906/8 continuously monitor the RHR heat exchanger cooling water effluent. On high alarm the operating loop may be terminated manually and the redundant loop brought on line. No control device is initiated by these monitors.

Pertinent information on these monitors is provided in LaSalle UFSAR Section 11.5.2.3.4.

2.3 Liquid Radiation Effluent Monitors Alarm and Trip Setpoints

Alarm and trip setpoints of liquid effluent monitors at the principal release points are established to ensure that the limits of RECS are not exceeded in the unrestricted area.

2.3.1 Liquid Radwaste Effluent Monitor

The monitor setpoint is found by solving equation (2-1) for the total isotopic activity.

$$P < K \times [\text{Ó } C_{iT} / \text{Ó } (C_{iT} / 10 \times DWC_i)] \times [(F_d + F_{r\,max})/F_{r\,max}] \qquad (2\text{-}1)$$

P	Release Setpoint	[cpm]
K	[Ó (K_i x C_i x W_i)/ Ó C_{Ti}]	[cpm/µCi/ml]
K_i	Counting efficiency for radionuclide I	[cpm/µCi/ml]
W_i	Weighting Factor	
C	Concentration of radionuclide i in the release tank.	[µCi/ml]
F	Maximum Release Tank Discharge Flow Rate The maximum flow rate is 45 gpm.	[gpm]
DWC	Derived Water Concentration of radionuclide i	[µCi/ml]
	The concentration of radionuclide i given in Appendix B, Table 2, Column 2 to 10CFR20.1001-2402.	
10	Multiplier associated with the limits specified in Part I RECS 12.3.1.	
F	Dilution Flow	[gpm]

2.3.2 Service Water Effluent Monitors

The monitor setpoint is established at two times the background count rate (not to exceed 10000 cpm).

2.3.3 RHR Heat Exchanger Cooling Water Monitors

The monitor setpoint is established at two times the background count rate (not to exceed 10000 cpm).

2.3.4 Discharge Flow Rates

2.3.4.1 Release Tank Discharge Flow Rate

Prior to each batch release, a grab sample is obtained.

The results of the analysis of the sample determine the discharge rate of each batch as follows:

$F_{rmax} = 0.1 \times [F_d / \acute{O} (C_i / 10xDWC_i)]$ (2-2)

The summation is over radionuclides i.

0.1 Reduction factor for conservatism.

F_{max} The maximum permitted flow rate from the radwaste discharge tank.

F_d Dilution Flow [gpm]

C_i Concentration of Radionuclide i in the Release Tank [µCi/mL]

The concentration of radioactivity in the radwaste discharge tank based on measurements of a sample drawn from the tank.

DWC_i Maximum Permissible Concentration of Radionuclide i [µCi/ml]

The concentration of radionuclide i given in Appendix B, Table 2, Column 2 to 10CFR20.1001-2402.

10 Multiplier associated with the limits specified in Part I RECS 12.3.1.

MF Multiplication Factor

$F_{max} 0.5 < F_{rmax} < 5$; MF = 5

$5 < F_{max}$

MF = 7.5

Recommended Release Tank Flow Rate.

$F_{r\,rec} = F_r\,max \times MF$ (2-3)

F_{rrec} recommended discharge flow rate (gpm)

$F_{r\,max}$ maximum permitted discharge flow rate (gpm)

MF multiplication factor.

2.3.4.2 Release Limits

Release limits are determined from RECS. Calculated maximum permissible discharge rates are divided by 10 for conservatism and to ensure that release concentrations are well below applicable derived water concentrations (DWC).

2.3.4.3 Release Mixture

For the liquid radwaste effluent monitor the release mixture used for the setpoint determination is the radionuclide mix identified in the grab sample isotopic analysis plus four additional radionuclides. The additional radionuclides are H-3, Fe-59, Sr-89, and Sr-90. The quantities to be added are obtained from the most current analysis for these four radionuclides.

For all other liquid effluent monitors no release mixture is used because the setpoint is established at "two times background."

2.3.4.4 Liquid Dilution Flow Rates

A conservative maximum blowdown flowrate of 20,000 gpm is used for all radwaste discharge calculations unless actual blowdown flow is determined to be less.

2.3.4.5 Conversion Factors

The readout for the liquid radwaste effluent monitor is in CPM. The calibration constant is based on the detector sensitivity to Cs-137/Ba-137 and an energy response curve.

2.3.5 Allocation of Effluents from Common Release Points

Based on common release point, liquid releases from the Station will be allocated to Unit 1. Other potential pathways (i.e., RHR) are allocated to their respective unit.

2.3.6 Projected Doses for Releases

Doses are not calculated prior to release. Dose contributions from liquid effluents are determined in accordance with the RECS and station procedures.

2.3.7 Solidification of Waste/Process Control Program

The process control program (PCP) contains the sampling, analysis, and formulation determination by which solidification of radioactive wastes from liquid systems is ensured.

Figure 2-4 is a simplified diagram of solid radwaste processing.

2.4 Airborne Release

A simplified gaseous radwaste and gaseous effluent flow diagram are provided in Figure 2-1.

The airborne release point for radioactive effluents is the ventilation stack, which is classified as a stack in accordance with the definitions in Section 4.1.4.

In addition, the standby gas treatment system effluent is released through a separate stack inside the ventilation stack. This release point has the same location and classification as the ventilation stack.

Exfiltration to the environment from the Turbine Building has been identified at times of positive pressure in the Turbine Building. Within 20 hours of the turbine building being at positive pressure continuous air sampling shall be in place in the south Turbine Building trackway to monitor releases through this pathway. The releases through the trackway door and other potential release paths contain insignificant levels of contamination when compared to the Station Vent Stack which has a 1,000,000 cfm typical stack flow compared to the Trackway flow rate of 40,000 scfm and conservatively estimated as a total of 80,000 scfm to account for pathways other than the trackway. In addition, typical releases from LaSalle Station have not exceeded 0.02% of the 10CFR50 Appendix I dose limits. Any identified release via this pathway is a ground level release and should be considered in dose calculations. See Figure 2-1 for further information.

Exfiltration to the environment from the North Service Building may occur due to changes in the ventilation system. Within 20 hrs of the turbine building being at positive pressure, air sampling shall be performed at times when the ventilation systems are aligned to support unit 2 egress. This air sampling is designed to ensure evaluation of releases emanating from the Turbine Building in accordance with Section 2.5.5.

The station vent stack is equipped with three access hatches at elevations 853', 888' and 1055'. Nominal leakage from these access hatches is expected at an approximated value of up to 1000 SCFM. Resultant doses due to this nominal leakage are negligible when compared to the SVS flow of 1.00 E6 SCFM and have been calculated as such. Doses due to this nominal leakage are therefore accounted for in the gaseous effluent stream and do not require further calculation.

During maintenance activities in which the hatch(es) would be opened, however, the lower elevation hatches (elevations 853' and 888') are classified as vent or "mixed mode" release pathways. These release pathways should be monitored during the maintenance activity period, with resultant releases calculated as mixed mode. Monitoring may be accomplished by determining flow at the point of release and conservatively utilizing the normal effluent release activity levels (at the SVS WRGM sample location). Flow via this pathway should be determined by measurement or engineering calculation. Release activities can be determined from the normal effluent sample point, assuming isokinetic flow at the release pathway. Alternately, grab sampling may be used to ensure representative sampling at the point of release.

The higher elevation hatch at 1050' remains as a stack (elevated) release pathway and can be monitored via the SVS instrumentation and methodology.

Airborne releases to the environment may result if a fire occurs in a contaminated material warehouse. In the event of a fire in a contaminated material warehouse this pathway would be considered a ground level release and should be quantified and considered in dose calculations.

2.4.1 Condenser Offgas Treatment System

The condenser offgas treatment system is designed and installed to reduce radioactive gaseous effluents by collecting non- condensable off-gases from the condenser and providing for holdup to reduce the total radioactivity by radiodecay prior to release to the environment. The daughter products are retained by charcoal and HEPA filters. The system is described in Section 11.3.2.1 of the LaSalle UFSAR.

2.4.2 Ventilation Exhaust Treatment System

Ventilation exhaust treatment systems are designed and installed to reduce gaseous radioiodine or radioactive material in particulate form in selected effluent streams by passing ventilation or vent exhaust gases through charcoal adsorbers and/or HEPA filters prior to release to the environment. Such a system is not considered to have any effect on noble gas effluents. The ventilation exhaust treatment systems are shown in Figure 2-1.

Engineered safety features atmospheric cleanup systems are not considered to be ventilation exhaust treatment system components.

2.5 Gaseous Effluent Radiation Monitors

2.5.1 Station Vent Stack Effluent Monitor

Monitor OPLD5J (Wide Range Noble Gas Monitor) continuously monitors the final effluent from the station vent stack.

The monitor system has isokinetic sampling, gaseous grab sampling, iodine and particulate sampling, tritium sampling, and post-accident sampling capability.

In normal operation the low-range noble gas channel is on line and active. The midrange channel replaces the low-range channel at a concentration of 0.01 µCi/cc png* and the high-range channel replaces the mid-range channel at a concentration of 10 uCi/cc png.

The low-range and mid/high-range iodine and particulate samplers operate in a similar manner. In normal operation the low-range samplers are on line. At a concentration of 0.001 µCi/cc png the mid/high-range samplers are brought on line, and at a concentration of 0.1 µCi/cc png the low-range sample pump is turned off.

---

* To facilitate use of the wide range gas monitors on the Station Vent Stack and Standby Gas Treatment System Stack in post-accident dose assessment, the output of each is expressed in units of pseudo noble gas (png) activity. Pseudo noble gas is a fictitious radionuclide defined to have emission characteristics representative of a post-accident noble gas mix. Upon decay, a pseudo noble gas nuclide emits one gamma ray with energy 0.8 MeV and one beta particle with endpoint energy 1.68 MeV and average energy 0.56 MeV.

No automatic isolation or control functions are performed by this monitor. Pertinent information on this monitor is provided in the LaSalle UFSAR Section 11.5.2.2.1.

2.5.2 Standby Gas Treatment System Effluent Monitor

Monitor OPLD2J (Wide Range Noble Gas Monitor) continuously monitors the final effluent from the standby gas treatment system (SGTS) stack.

The SGTS stack monitor has isokinetic sampling, gaseous grab sampling, particulate and iodine sampling, and post accident sampling capability.

In normal operation the low range noble gas channel is on line and active. The midrange channel replaces the low-range channel at a concentration of 0.01 µCi/cc png and the high-range channel replaces the mid-range channel at a concentration of 10 µCi/cc png.

The low-range and mid/high-range iodine and particulate samples operate in a similar manner. In normal operation, the low-range samples are on-line. At a concentration of 0.001 µCi/cc png the mid/high-range samplers are brought on-line, and at a concentration of 0.1 µCi/cc png the low-range sample pump is turned off.

No automatic isolation or control functions are performed by this monitor.

Pertinent information on this monitor is provided in the LaSalle UFSAR Section 11.5.2.2.2.

2.5.3 Reactor Building Ventilation Monitors

Monitors 1(2)D18-NOO9 continuously monitor the effluent from the Unit 1(2) reactor building. On high alarm, the monitors automatically initiate the following actions:

A. Shutdown and isolation of the reactor building vent system

B. Startup of the standby gas treatment system

C. Isolation of primary containment purge and vent lines

Pertinent information on these monitors is provided in LaSalle UFSAR Section 11.5.2.1.1.

2.5.4 Condenser Air Ejector Monitors

Monitors 1(2)D18-N002/N012 (pre-treatment) and 1(2)D18-N903A/B (post-treatment) continuously monitor gross gamma activity downstream of the steam jet air ejector and prior to release to the main stack.

On "high-high-high" alarm monitor 1(2)D18-N903A/B automatically initiates closure of valve 1(2)N62-F057 thus terminating the release.

Pertinent information on these monitors is found in LaSalle UFSAR Sections 11.5.2.1.2 and 11.5.2.1.3.

2.5.5 Turbine Building Trackway and North Service building

In order to quantify releases via either the (1) Turbine Building Trackway or (2) North Service Building (when the ventilation systems are aligned to support the unit 2 egress) at times of positive pressure in the Turbine Building, airborne sampling shall be continuously collected using an air sampler appropriately located. The air sampler collecting shall begin within 20 hours of the turbine building being at positive pressure, and then continuously for as long as the turbine building remains at positive pressure. The samples collected should be counted on a weekly basis. Air sampling to identify noble gas, iodine and particulate monitoring (either as a grab sampler or continuous sampling) is designed to ensure evaluation of releases emanating from the Turbine Building.

The curie content of any contaminated material warehouse is maintained current by site administrative procedures. If a fire were to occur, the actual curie content of the warehouse would be used in determining the ground level release.

2.6 Gaseous Radiation Effluent Alarm and Trip Setpoints

2.6.1 Reactor Building Vent Effluent Monitor

The setpoint for the reactor building vent effluent monitor is established at 10 mR/hr.

2.6.2 Condenser Air Ejector Monitors

Pre-Treatment Monitor

The high trip setpoint is established at 1.5 times the normal full power background rate, including nitrogen-16 (N-16) to help ensure that effluents are maintained ALARA.

The high-high trip setpoint is established at < 100 µCi/sec per MW-th 3.4E+05 µCi/sec per Technical Specification 3.7.6.

Post-Treatment Monitor

The off-gas isolation setpoint is conservatively set at or below one-half the release limit calculated using the more conservative value obtained from equations (2-5) and (2-6) below.

The off gas isolation setpoint is converted into the monitor units of counts per second (cps) as follows:

P Q E R R F SVS png OG OG ¡Ü × × ÷ / (2-4)

P Off-gas Post-treatment Monitor Isolation Setpoint. [cps]

The off-gas post-treatment monitor setpoint which initiates isolation of flow of offgas to the station vent stack.

Q_{SVS} Actual Station Vent Stack High Alarm Setpoint [µCi/sec of png]
The actual high alarm setpoint of the Station Vent Stack wide range gas monitor in units of µCi/sec of png (pseudo noble gas). This is determined by using Equations (2-5) and (2-6) and then converting the result to units of µCi/sec of png.

E Efficiency of the Off-Gas Post Treatment Monitor [cps/(µCi/sec of off gas mix)]

R_{png} Response of the Station Vent Stack WRGM to Pseudo Noble Gas [cpm per µCi/cc of pseudo noble gas]

R_{OG} Response of the Station Vent Stack WRGM to Off Gas [cpm per µCi/cc of off gas]

F_{OG} Maximum Off-Gas Flow Rate [cc/sec]

2.6.3 Station Vent Stack Effluent Monitor

The high alarm setpoint for the station vent stack effluent monitor is conservatively set at or below one-half the calculated release limit calculated using the more conservative value obtained from equations (2-5) and (2-6) below. These equations yield the release limit in units of µCi/sec of the mix specified in Table 2-1. For consistency with the monitor readout, this calculated release limit is converted to units of µCi/sec of pseudo noble gas before being entered into the monitor data base.

2.6.4 Standby Gas Treatment Stack Monitor

The high alarm setpoint for the standby gas treatment system effluent monitor is conservatively set at or below one-half the release limit calculated using the more conservative value obtained from equations (2-5) and (2-6) below. These equations yield the release limit in units of µCi/sec of the mix specified in Table 2-1. For consistency with the monitor readout, this calculated release limit is converted to units of µCi/sec of pseudo noble gas before being entered into the monitor data base.

2.6.5 Release Limits

Alarm and trip setpoints of gaseous effluent monitors are established to ensure that the release rate limits of RECS are not exceeded. The release limit Q_{ts} is found by solving Equations (2-5) and (2-6).

$$(1.11\quad)\ Q_{ts} \Sigma \{F_i S_i\} \leq 50 \text{ mrem/yr}$$

$$Q_{ts}\ \Sigma\{\bar{L}_i\ f_i\ (X/Q)_s\ \exp(-\lambda_i\ R/3600\,U_s)\dagger + (1.11)(f_i)S_i\} < 3000\ mrem/yr$$

The summations are over noble gas radionuclides i.

f_i Fractional Radionuclide Composition:

The release rate of noble gas radionuclide i divided by the total release rate of all noble gas radionuclides.

Q_{ts} Total Allowed Release Rate, Stack Release [μCi/sec of ODCM mix]

The total allowed release rate of all noble gas radionuclides released as stack releases in units of μCi/sec of the mix specified in section 2.6.6.

† exp $(-\lambda_i R/3600\ U_s)$ is conservatively set equal to 1.0 for purposes of determining setpoints.

The remaining parameters in Equation (2-5) have the same definitions as in Equation 4- 9 of Section 4.2.3.1. The remaining parameters in Equation (2-6) have the same definition as in Equation 4-10 of Section 4.2.3.2.

Equation (2-5) is based on Equation 4-9 of Section 4.2.3.1 and the RECS restriction on whole body dose rate (500 mrem/yr) due to noble gases released in gaseous effluents (see Section 4.2.1.1). Equation (2-6) is based on Equation 4-10 of Section 4.2.3.2 and the RECS restriction on skin dose rate (3000 mrem/yr) due to noble gases released in gaseous effluents (see Section 4.2.1.2).

The more conservative solution from Equations (2-5) and (2-6) is used as the limiting noble gas release rate.

Calibration methods and surveillance frequency for the monitors will be conducted as specified in the RECS.

2.6.6 Release Mixture

In the determination of alarm and trip set points, the radioactivity mixture in the exhaust air is assumed to have the radionuclide composition in Table 2-1, taken from Table 3-3 of GE NEDO-10871, March 1973.

2.6.7 Conversion Factors

The conversion factors used to establish gaseous effluent monitor setpoints are obtained as follows.

Station vent stack effluent monitor.

Calibrations compare the response of station detectors to that of a reference detector using NIST traceable sources. Conversion factors for the station detectors are obtained from the response to noble gas or solid sources.

Condenser air ejector monitor.

Pretreatment Monitor

The value is determined using noble gas radionuclides identified in a representative sample, and the offgas release rate and monitor response at the time the sample is taken.

Post-treatment Monitor

The value is determined using noble gas radionuclides identified in a representative sample, and the offgas concentration and monitor response at the time the sample is taken.

Standby gas treatment system monitor.

Calibrations compare the response of station detectors to that of a reference detector using NIST traceable sources. Conversion factors for the station detectors are obtained from the response to noble gas or solid sources.

2.6.8 HVAC Flow Rates

The main stack flow rate is obtained from either the process computer or Monitor RM- 23.

The SGTS flow rate is obtained from either the process computer or chart recorders in the main control room.

2.6.9 Allocation of Effluents from Common Release Points

Radioactive gaseous effluents released from the main chimney are comprised of contributions from both units. Under normal operating conditions, it is difficult to allocate the radioactivity between units due to fuel performance, in-plant leakage, power history, and other variables. Consequently, no allocation is normally made between the units. Instead, the entire release is treated as a single source.

2.6.10 Dose Projections

Because the gaseous releases are continuous, the doses are routinely calculated in accordance with the RECS.

Table 2-1

Assumed Composition of the LaSalle Station Noble Gas Effluent
(From GE NEDO – 10871 Table 3.3)

Nuclide	T1/2	uCi/s @ T=0	Contribution	% Contribution
Kr83m	1.86h	3.40E+03	4.50E-03	0.45%
Kr85m	4.4h	6.10E+03	8.08E-03	0.81%
Kr85	10.74h	2.00E+01	2.65E-05	0.00%
Kr87	76m	2.00E+04	2.65E-02	2.65%
Kr88	2.79h	2.00E+04	2.65E-02	2.65%
Kr89	3.18m	1.30E+05	1.72E-01	17.22%
Kr90	32.3s	2.80E+05	3.71E-01	37.08%
Xe131m	11.96d	1.50E+01	1.99E-05	0.00%
Xe133m	2.26d	2.90E+02	3.84E-04	0.04%
Xe133	5.27d	8.20E+03	1.09E-02	1.09%
Xe135m	15.7m	2.60E+04	3.44E-02	3.44%
Xe135	9.16h	2.20E+04	2.91E-02	2.91%
Xe137	3.82m	1.50E+05	1.99E-01	19.87%
Xe138	14.2m	8.90E+04	1.18E-01	11.79%
Total		7.55E+05	1.00E+00	100.00%

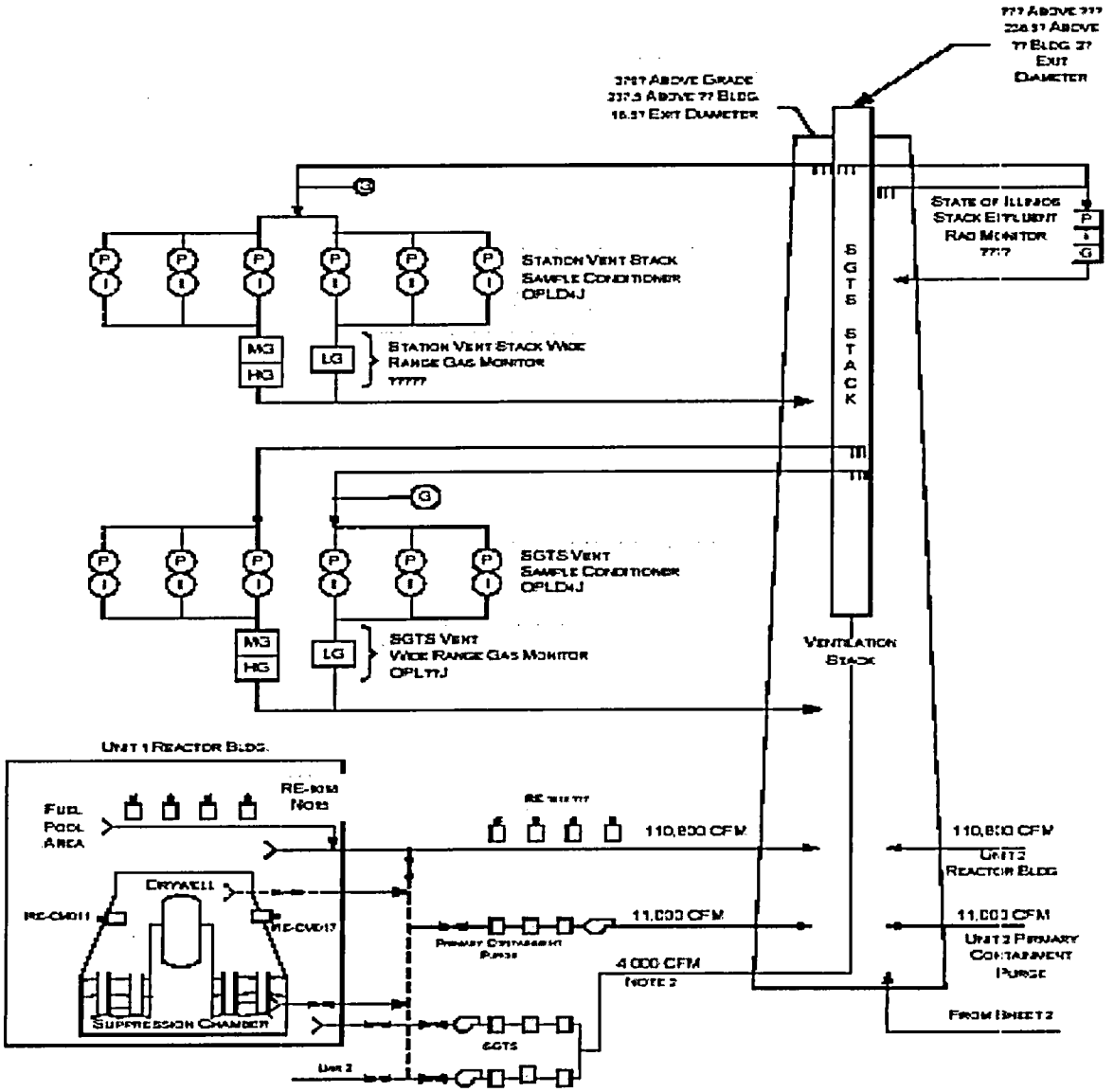

OFFSITE DOSE CALCULATION MANUAL
LASALLE COUNTY STATION

FIGURE 2-1
SIMPLIFIED GASEOUS RADWASTE AND GASEOUS EFFLUENT FLOW DIAGRAM
(SHEET 1 OF 2)

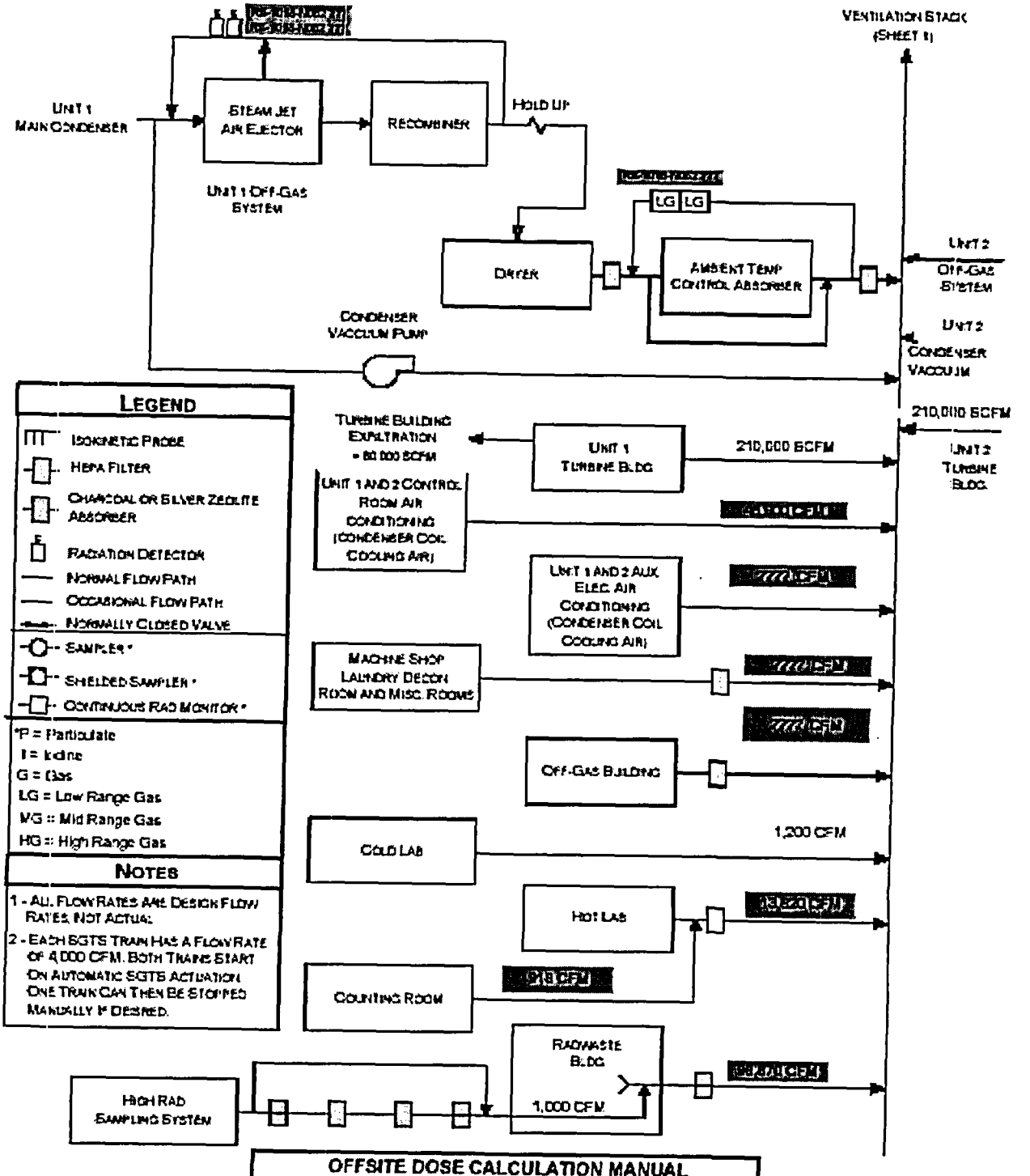

OFFSITE DOSE CALCULATION MANUAL
LASALLE COUNTY STATION

FIGURE 2-1
SIMPLIFIED GASEOUS RADWASTE AND GASEOUS EFFLUENT FLOW DIAGRAM
(SHEET 2 OF 2)

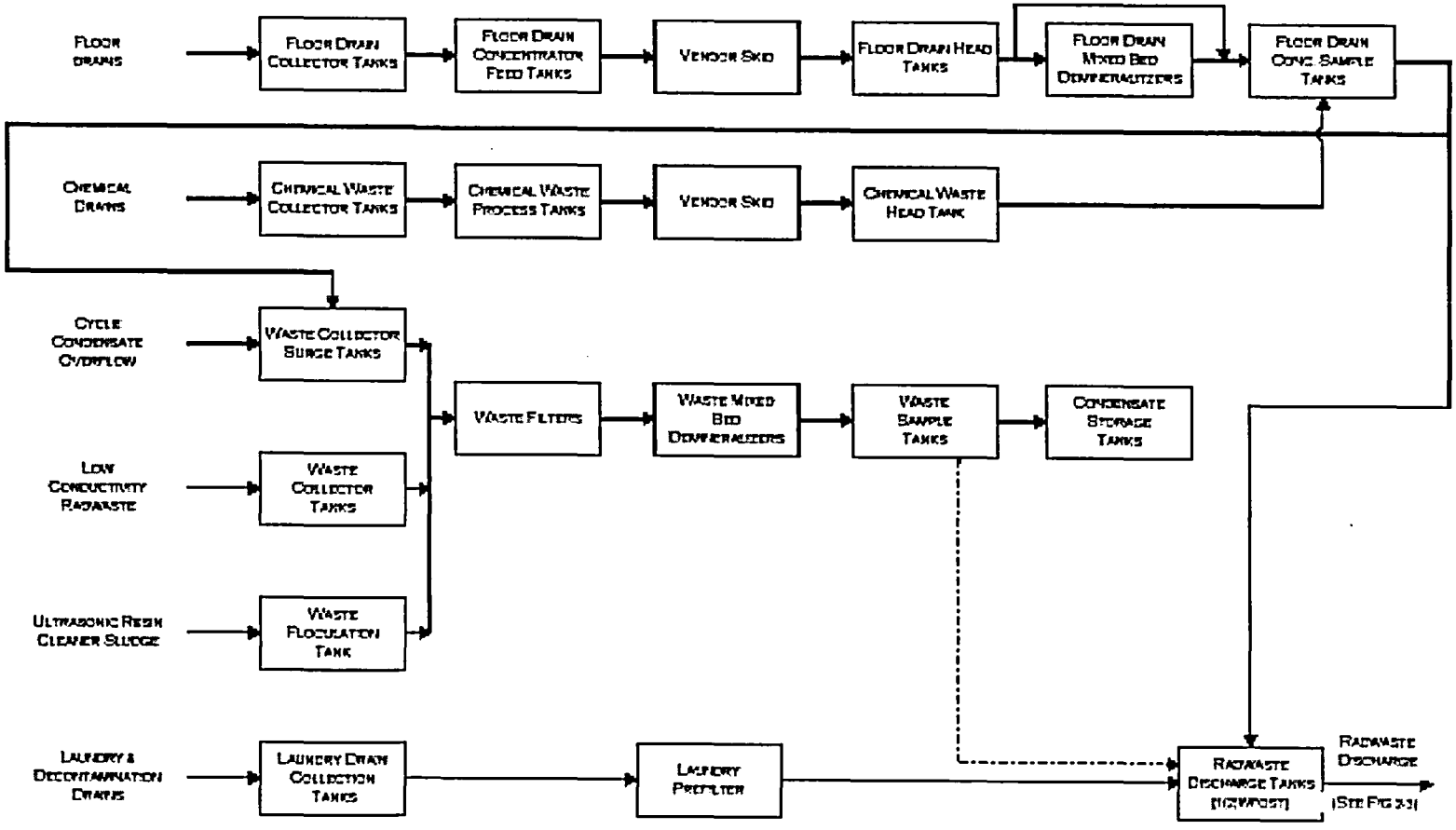

Preferred Flow Path

Alernate Flow Path

OFFSITE DOSE CALCULATION MANUAL
LASALLE COUNTY STATION

FIGURE 2-2

SIMPLIFIED LIQUID RADWASTE PROCESSING DIAGRAM

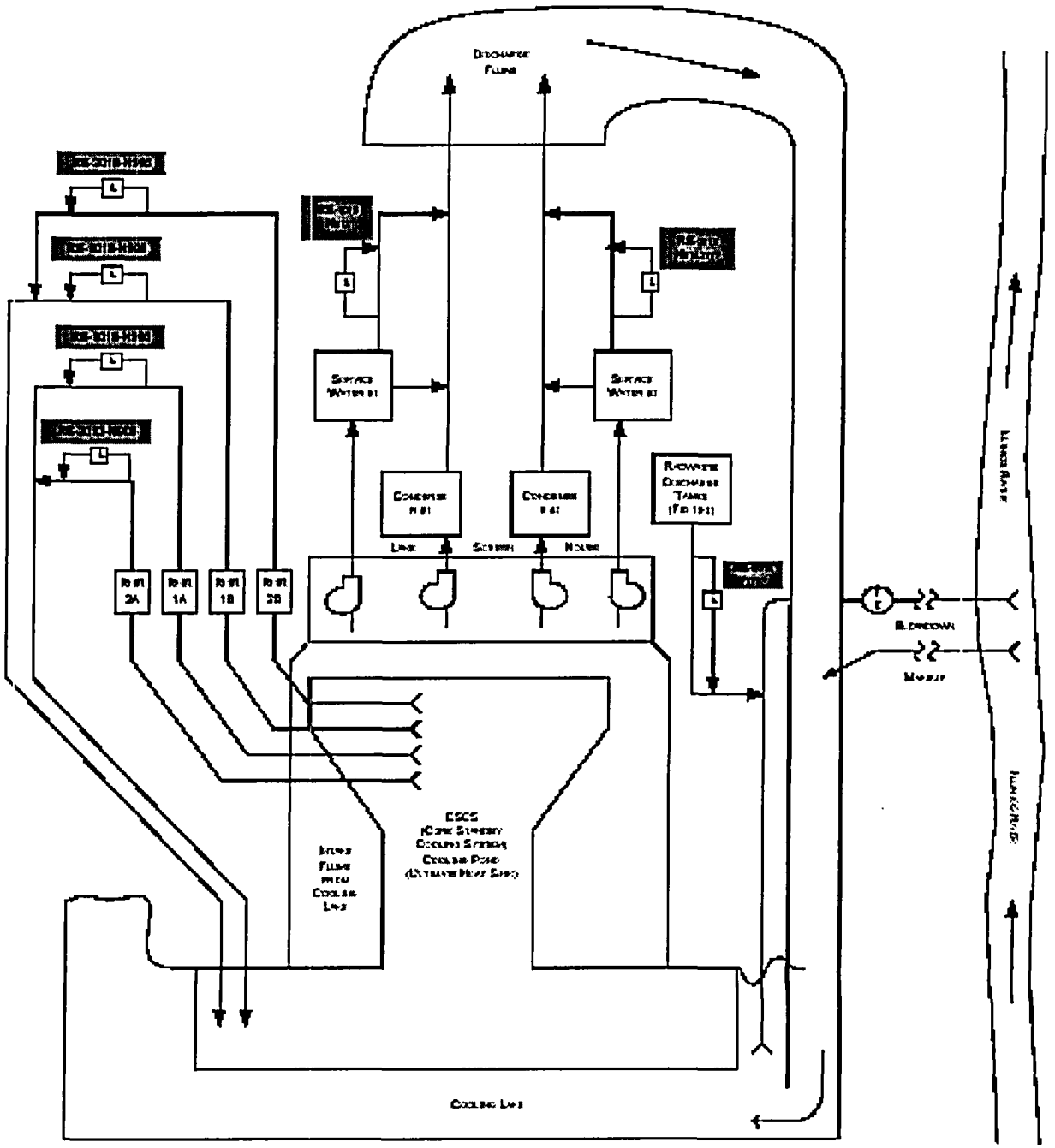

OFFSITE DOSE CALCULATION MANUAL
LASALLE COUNTY STATION

FIGURE 2-3

SIMPLIFIED LIQUID EFFLUENT FLOW DIAGRAM

LEGEND AND NOTES

L LIQUID RADIATION MONITOR

FE FLOW ELEMENT

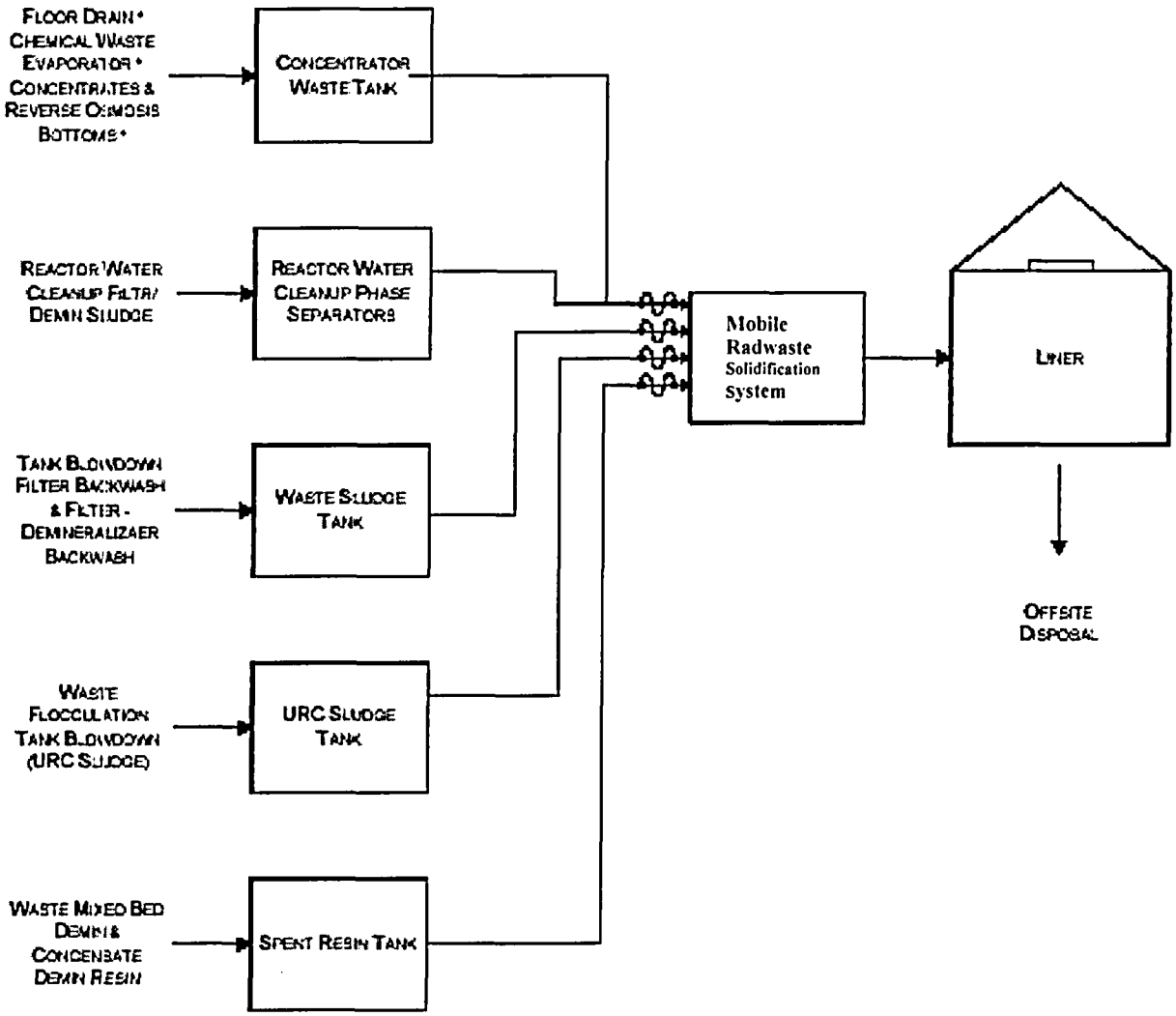

Legend and Notes

Flexible Hose

URC = Ultrasonic Resin Cleaner

* Abandoned in Place

OFFSITE DOSE CALCULATION MANUAL
LASALLE COUNTY STATION

FIGURE 2-4

SIMPLIFIED SOLID RADWASTE PROCESSING DIAGRAM

3.0 LIQUID EFFLUENTS

3.1 Liquid Effluent Releases – General Information

3.1.1 The design objectives of 10CFR50, Appendix I and RECS provide the following limits on the dose to a member of the public from radioactive materials in liquid effluents released from each reactor unit to restricted area boundaries:

- During any calendar quarter, less than or equal to 1.5 mrem to the total body and less than or equal to 5 mrem to any organ.
- During any calendar year, less than or equal to 3 mrem to the total body and less than or equal to 10 mrem to any organ.

3.1.2 The organ doses due to radioactivity in liquid effluents are also used as part of the 40CFR190 compliance and are included in the combination of doses to determine the total dose used to demonstrate 10CFR20 compliance. (See Section 5.0, Total Dose)

3.1.3 Dose assessments for 10CFR20 and 40CFR190 compliance are made for an adult using Federal Guidance Report No. 11 (Reference 93) dose conversion factors. Dose assessments for 10CFR50 Appendix I compliance are made for four age groups (adult/teenager/child/infant) using Regulatory Guide 1.109 (Reference 6) dose conversion factors.

3.1.4 To limit the consequences of tank overflow, the RECS/Technical Specifications may limit the quantity of radioactivity that may be stored in unprotected outdoor tanks. Unprotected tanks are tanks that are not surrounded by liners, dikes, or walls capable of holding the tank contents and that do not have tank overflows and surrounding area drains connected to the liquid radwaste treatment system. The specific objective is to provide assurance that in the event of an uncontrolled release of a tank's contents, the resulting radioactivity concentrations beyond the unrestricted area boundary, at the nearest potable water supply and at the nearest surface water supply, will be less than the limits of 10CFR20 Appendix B, Table 2; Column 2.

The Technical Specifications and RECS may contain a somewhat similar provision. For most nuclear power stations, specific numerical limits are specified on the number of curies allowed in affected tanks.

3.1.5 Cases in which normally non-radioactive liquid streams (such as the Service Water) are found to contain radioactive material are non-routine will be treated on a case specific basis if and when this occurs. Since the station has sufficient capacity to delay a liquid release for reasonable periods of time, it is expected that planned releases will not take place under these circumstances. Therefore, the liquid release setpoint calculations need not and do not contain provisions for treating multiple simultaneous release pathways.

3.2 Liquid Effluent Concentrations

3.2.1 One method of demonstrating compliance to the requirements of 10CFR20.1301 is to demonstrate that the annual average concentrations of radioactive material released in gaseous and liquid effluents do not exceed the values specified in 10CFR20 Appendix B, Table 2, Column 2. (See 10CFR 20.1302(b)(2).) However, as noted in Section 5.5, this mode of 10CFR20.1301 compliance has not been elected.

As a means of assuring that annual concentration limits will not be exceeded, and as a matter of policy assuring that doses by the liquid pathway will be ALARA; RECS provides the following restriction:

> "The concentration of radioactive material released in liquid effluents to unrestricted areas shall be limited to ten times the concentration values in Appendix B, Table 2, Column 2 to 10CFR20.1001-20.2402."

This also meets the requirement of Station Technical Specifications and RECS.

3.2.2 According to the footnotes to 10CFR20 Appendix B, Table 2, Column 2, if a radionuclide mix of known composition is released, the concentrations must be such that

$$\sum_i \left(\frac{C_i}{10\ ECL_i} \right) \leq 1 \qquad (3\text{-}1)$$

where the summation is over radionuclide **i**.

C_i Radioactivity Concentration in Liquid Effluents to the Unrestricted Area [μCi/ml]

Concentration of radionuclide **i** in liquid released to the unrestricted area.

ECL_i Effluent Concentration Limit in Liquid Effluents Released to the Unrestricted Area [μCi/ml]

The allowable annual average concentration of radionuclide **i** in liquid effluents released to the unrestricted area. This concentration is specified in 10CFR20 Appendix B, Table 2, Column 2. Concentrations for noble gases are different and are specified in the stations' Technical Specifications/RECS.

10 Multiplier to meet the requirements of Technical Specifications.

If either the identity or concentration of any radionuclide in the mixture is not known, special rules apply. These are given in the footnotes in 10CFR20 Appendix B, Table 2, Column 2.

3.2.3 When radioactivity is released to the unrestricted area with liquid discharge from a tank (e.g., a radwaste discharge tank), the concentration of a radionuclide in the effluent is calculated as follows:

$$C_i = (C_i^t)\,(F^r)/(F^d + F^r) \qquad (3\text{-}2)$$

C_i Concentration in Liquid effluent to the unrestricted area. [μCi/ml]

Concentration of radionuclide 'i' in liquid released to the unrestricted area.

C_i^t Concentration in the Discharge Tank [μCi/ml]

Measured concentration of radionuclide **i** in the discharge tank.

F^r Flow Rate, Tank Discharge [cfs]

Measured flow rate of liquid from the discharge tank to the initial dilution stream.

F^d Flow Rate, Initial Dilution Stream [cfs]

Measured flow rate of the initial dilution stream that carries the radionuclides to the unrestricted area boundary (e.g. circulating cooling water or blowdown from a cooling tower or lake).

The RECS and Technical Specifications require a specified sampling and analysis program to assure that liquid radioactivity concentrations at the point of release are maintained within the required limits. To comply with this provision, samples are analyzed in accordance with the radioactive liquid waste (or effluent) sampling and analysis program in Section 12.3 of Part I, RECS. Radioactivity concentrations in tank effluents are determined in accordance with Equation 3-2. Comparison with the Effluent Concentration Limit is made using Equation 3-1.

3.3 Liquid Effluent Dose Calculation Requirements

3.3.1 RECS require determination of cumulative and projected dose contributions from liquid effluents for the current calendar quarter and the current calendar year at least once per 31 days. (See Section 3/4.3.2 of Part I, RECS.)

For a release attributable to a processing or effluent system shared by more than one reactor unit, the dose due to an individual unit is obtained by proportioning the effluents among the units sharing the system.

3.3.2 Operability and Use of the Liquid Radwaste Treatment System

The design objectives of 10CFR50, Appendix I and RECS/Technical Specifications require that the liquid radwaste treatment system be operable and that appropriate portions be used to reduce releases of radioactivity when projected doses due to the liquid effluent from each reactor unit to restricted area boundaries exceed either of the following (see Section 12.3.3 of Part I, RECS);

- 0.06 mrem to the total body in a 31-day period.
- 0.2 mrem to any organ in a 31-day period.

3.4 Dose Methodology

3.4.1 Liquid Effluent Dose Method: General

The dose from radioactive materials in liquid effluents considers the contributions for consumption of fish and potable water. All of these pathways are considered in the dose assessment unless demonstrated not to be present. While the adult is normally considered the maximum individual, the methodology provides for dose to be calculated for all four age groups. The dose to each organ (and to the total body) is calculated by the following expression:

$$D_{ja}^{Liq} = D^{water}{}_{ja} + D^{fish}{}_{ja} \qquad (3\text{-}3)$$

Where: $D^{water}{}_{ja} = (1.1E-3)(8760)(U^{w}{}_{a}\, M^{w}/F^{w}) \times \Sigma\{A_i\, DFI_{ija}\, \exp(-\lambda_i\, t^{w})\}$

And: $D^{fish}{}_{ja} = (1.1E-3)(8760)(U^{f}{}_{a}\, M^{f}/F^{f}) \times \Sigma\{B_i\, DFI_{ija}\, \exp(-\lambda_i\, t^{f})\}$

These summations are over I radionuclides.

D_{ja}^{Liq} Total organ, and total body, dose commitment [mrem]
(CDE) Due to Radioactivity in Liquid Effluents.

Dose commitment to organ j (and total body) of age group a consuming water and fish containing radioactivity released in liquid effluents.

D_{ja}^{water} Committed Dose Equivalent (CDE) Due [mrem]
to Consumption of Drinking Water

Dose commitment to organ j of age group a consuming water containing radioactivity released in liquid effluents.

D_{ja}^{fish} Committed Dose Equivalent (CDE) Due to [mrem]
Consumption of Fish

Dose commitment to organ j of age group a consuming fish containing radioactivity released in liquid effluents.

U_a^w, U_a^f Usage Factor [L/hr, kg/hr]

Consumption rate of water (U^w_a) or fish (U^f_a). See Table C-2 of Appendix C.

$1/M^w, 1/M^f$ Dilution Factor

Measure of dilution prior to withdrawal of potable water or fish.

F^w Average Flow Rate [cfs]

Average flow rate of receiving body of water at point where Potable water is taken.

F^f Near-Field Flow Rate [cfs]

Near field flow rate of receiving body of water (in region where fish are taken).

A_i Radionuclide Release [µCi]

Measured amount of radionuclide 'i' released in liquid effluents during the time period under consideration.

DFI_{ija} Ingestion Dose Factor [mrem.ppCi]

Dose commitment to organ j (and total body) of an individual in age group 'a' per unit of activity of radionuclide 'i' ingested.

Assessment	Dose Factor	Age Group
10CFR50 App. I	Reg. Guide 1.109 Tables E=11 through E-14.	All (four)
10CFR20/40CFR190	Federal Guidance Report-11; Table 2.2	Adult (average)

λ_i Decay Constant [hr^{-1}]

Radiological decay constant of radionuclide 'i'.

t^w, t^w Elapsed time

Average elapsed time between release and consumption of potable water or fish.

B_i Bioaccumulation Factor [L/kg]

Equilibrium ratio of the concentration of radionuclide "i" in fish (pCi/kg) to its concentration in water (pCi/L).

1.1E-3 Conversion Constant [(pCi/liter) per (μCi/yr)/(cfs)]

Factor to convert to pCi/liter from (μCi/yr)/(cfs).

8760 Conversion Constant (hours per year) [hr/yr]

3.4.2 Potable Water Pathway

$$D^{water}{}_{ja} = (1.1E-3)(8760)(U^w{}_a\, M^w/F^w)\, x\, \Sigma\{A_i\, DFI_{ija}\, \exp(-\lambda_i\, t^w)\}$$

Terms defined under Equation 3-3

3.4.3 Fish Ingestion Pathway

$$D^{fish}{}_{ja} = (1.1E-3)(8760)(U^f{}_a\, M^f/F^f)\, x\, \Sigma\{A_i\, DFI_{ija}\, B_i\, \exp(-\lambda_i\, t^f)\}$$

Terms defined under Equation 3-3

3.4.4 Offsite Doses

Offsite doses due to projected releases of radioactive materials in liquid effluents are calculated using Equation 3-3. Projected radionuclide release concentrations are used in place of measured concentrations, C_i.

3.4.5 Drinking Water

LaSalle Station has requirements for calculation of drinking water dose that are related to 40CFR141, the Environmental Protection Agency National Primary Drinking Water Regulations. These are discussed in Section 1.2.1.

3.5 Bioaccumulation Factors

3.5.1 There are no public potable water intakes on the Illinois River for 97 miles downstream of the station at Peoria, IL.

3.5.2 There is no irrigation occurring on the Illinois River downstream of the station.

3.5.3 Recreation includes one or more of the following: boating, water-skiing, swimming, and sport fishing.

Table 3-1

Bioaccumulation Factors (BF_i) to be Used in the Absence of Site-Specific Data

Element	BF_i for Freshwater Fish (pCi/kg per pCi/L)	Reference
H	9.0E-01	6
Be	2.8E+01	Footnote 2
C	4.6E+03	6
F	2.2E+02	Footnote 16
Na	1.0E+02	6
Mg	2.8E+01	Footnote 2
Al	2.2E+03	Footnote 13
P	1.0E+05	6
Cl	2.2E+02	Footnote 16
Ar	NA	NA
K	1.0E+03	Footnote 1
Ca	2.8E+01	Footnote 2
Sc	2.5E+01	Footnote 3
Ti	3.3E+00	Footnote 4
V	3.0E+04	Footnote 5
Cr	2.0E+02	6
Mn	4.0E+02	6
Fe	1.0E+02	6
Co	5.0E+01	6
Ni	1.0E+02	6
Cu	5.0E+01	6
Zn	2.0E+03	6
Ga	2.2E+03	Footnote 13
Ge	2.4E+03	Footnote 12
As	3.3E+04	Footnote 14
Se	4.0E+02	Footnote 15
Br	4.2E+02	6
Kr	NA	NA
Rb	2.0E+03	6
Sr	3.0E+01	6
Y	2.5E+01	6
Zr	3.3E+00	6
Nb	3.0E+04	6
Mo	1.0E+01	6
Tc	1.5E+01	6
Ru	1.0E+01	6
Rh	1.0E+01	6
Pd	1.0E+02	Footnote 9

Table 3-1 (cont.) **Bioaccumulation Factors (BF_i) to be Used in the Absence of Site-Specific Data**		
Cd	2.0E+03	Footnote 11
In	2.2E+03	Footnote 13
Sn	2.4E+03	Footnote 12
Sb	1.0E+00	98
Ag	2.3E+00	56
Te	4.0E+02	6
I	1.5E+01	6
Xe	NA	NA
Cs	2.0E+03	6
Ba	4.0E+00	6
La	2.5E+01	6
Ce	1.0E+00	6
Pr	2.5E+01	6
Nd	2.5E+01	6
Pm	3.0E+01	98
Sm	3.0E+01	Footnote 3
Eu	1.0E+02	Footnote 3
Gd	2.6E+01	Footnote 3
Dy	2.2E+03	Footnote 3
Er	3.3E+04	Footnote 3
Tm	4.0E+02	Footnote 3
Yb	2.2E+02	Footnote 3
Lu	2.5E+01	Footnote 3
Hf	3.3E+00	Footnote 4
Ta	3.0E+04	Footnote 5
W	1.2E+03	6
Re	2.1E+02	Footnote 6
Os	5.5E+01	Footnote 7
Ir	3.0E+01	Footnote 8
Pt	1.0E+02	Footnote 9
Au	2.6E+01	Footnote 10
Hg	2.0E+03	Footnote 11
Tl	2.2E+03	Footnote 13
Pb	3.0E+02	98
Bi	2.0E+01	98
Ra	5.0E+01	98
Th	3.0E+01	98
U	1.0E+01	98
Np	1.0E+01	6
Am	3.0E+01	98

Footnotes:
NA = It is assumed that noble gases are not accumulated.

In Reference 6, see Table A-1.

A number of bioaccumulation factors could not be found in literature. In this case, the periodic table was used in conjunction with published element values. This method was used for periodic table columns except where there were no values for column 3A so the average of columns 2B and 4A was assigned.

1. Value is the average of Reference 6 values in literature for H, Na, Rb and Cs.
2. Value is the average of Ref. 6 values in literature for Sr, Ba and Ref. 98 values for Ra.
3. Value is the same as the Reference 6 value used for Y.
4. Value is the same as the Reference 6 value used for Zr.
5. Value is the same as the Reference 6 value used for Nb.
6. Value is the average of Reference 6 values in literature for Mn and Tc.
7. Value is the average of Reference 6 values in literature for Fe and Ru.
8. Value is the average of Reference 6 values in literature for Co and Rh.
9. Value is the same as the Reference 6 value used for Ni.
10. Value is the average of Reference 6 values in literature for Cu and Reference 56 value for Ag.
11. Value used is the same as the Reference 6 value used for Zn.
12. Value is the average of Reference 6 value in literature for C and Reference 98 value for Pb.
13. Value is the average of columns 2B and 4A, where column 2B is the "Reference 6 value for Zn" and column 4A is the average of "Reference 6 value for C and Reference 98 value for Pb".
14. Value is the average of Ref. 6 value found in literature for P and the Ref. 98 values for Bi and Sb.
15. Value is the same as the Reference 6 value used for Te.
16. Value is the average of Reference 6 values found in literature for Br and I.

4.0 Gaseous Effluents

4.1 Gaseous Effluents – General Information

This section reviews the offsite radiological limits applicable to the LaSalle Station and presents in detail the equations and procedures used to assess compliance with these limits. This calculational approach uses the methodology of NUREG-0133 (Reference 14), and incorporates certain simplifications such as the use of average metecrology.

4.1.1 Pre-calculated atmospheric transport parameters are based on historical average atmospheric conditions. These historical meteorological conditions have resulted in the dispersion parameters shown in Table 4-2 through Table 4-5, and Table 4-9 through Table 4-11.

4.1.2 The equations and parameters of this section are for use in calculating offsite radiation doses during routine operating conditions. They are not for use in calculating doses due to non-routine releases (e.g., accident releases).

4.1.3 An overview of the required compliance is given in Table 1-1. The dose components are itemized and referenced, and an indication of their regulatory application is noted. Additionally, the locations of dose receivers for each dose component are given in Table 1-2.

4.1.4 Airborne Release Point Classifications

The pattern of dispersion of airborne releases is dependent on the height of the release point relative to adjacent structures. Each release point is classified as one of the following three height-dependent types:

- Stack (or Elevated) Release Point (denoted by the letter S or subscript s)
- Ground Level Release Point (denoted by the letter G or subscript g)
- Vent (or Mixed Mode) Release Point (denoted by the letter V or subscript v)

4.1.5 Operability and Use of Gaseous Effluent Treatment Systems

10CFR50 Appendix I and ODCM Part I (RECS) require that the ventilation exhaust treatment system and the waste gas holdup system be used when projected offsite doses in 31 days, due to gaseous effluent releases, from each reactor unit, exceed any of the following limits:

- 0.2 mrad to air from gamma radiation.
- 0.4 mrad to air from beta radiation.
- 0.3 mrem to any organ of a member of the public.

The station must project doses due to gaseous releases from the site at least once per 31 days. The calculational methods shown in sections 4.2.2.1 and 4.2.2.2 are used for this dose projection.

4.1.6 For a release attributable to a processing or effluent system shared by more than one reactor unit, the dose due to an individual unit is obtained by proportioning the effluents among the units sharing the system.

4.2 Gaseous Effluents – Dose and Dose Rate Calculation Requirements

4.2.1 Instantaneous Dose Rates

4.2.1.1 Noble Gas: Total Body Dose Rate

RECS limits the total body dose rate due to noble gases in gaseous effluents released from a site to areas at and beyond the site boundary to less than or equal to 500 mrem/yr at all times.

The total body dose rate due to noble gases released in gaseous effluents is calculated by the following expression:

$$D_{Tb} = (1.11)\,\Sigma\{\bar{S}_i Q_{is} + \bar{V}_i Q_{iv} + \bar{G}_i Q_{ig}\} \qquad (4\text{-}1)$$

The summation is over noble gas radionucides 'i'.

D_{Tb}	Whole Body Dose Rate Dose rate to the whole body due to gamma radiation from noble gas radionuclides released in gaseous effluents.	[mrem/yr]
Q_{is}, Q_{iv}, Q_{ig}	Release Rate Measured release rate of radionuclide 'i' from a stack, vent, or ground level release point.	[µCi/sec]

To comply with this specification, the effluent radiation monitor has a setpoint corresponding to an offsite total body dose rate at or below the limit (see Part II Section 2.6). In addition, compliance is assessed by calculating offsite total body dose rate based on periodic samples obtained per station procedures.

4.2.1.2 Noble Gas: Skin Dose Rate

RECS limits the skin dose rate due to noble gases in gaseous effluents released from a site to areas at and beyond the site boundary to less than or equal to a dose rate of 3000 mrem/yr at all times. (See Part I Section 12.4.1)

The skin dose rate due to noble gases released in gaseous effluents is calculated by the following expression:

$$D_s = \Sigma\{ L_i[(X/Q)_s Q'_{is} + (X/Q_v)Q'_v + (X/Q)_g Q'_{ig}] + (1.11)[S_i Q_{is} + V_i Q_{iv} + G_i Q_{ig}]\} \quad (4\text{-}2)$$

The summation is over noble gas radionuclides i.

D_s	Skin Dose Rate	[mrem/yr]
	Dose rate to skin due to beta and gamma radiation from noble gas radionuclides released in gaseous effluents.	
Q'_{is} Q'_{iv} Q'_{ig}	Release Rate, Adjusted for Radiodecay	[μCi/sec]
	Measured release rate of radionuclide 'i' from a stack, vent, or ground level release point, reduced to account for radiodecay in transit from the release point to the dose point.	
	$Q'_{is} = Q'_{is} \exp(-\lambda_i R/3600u_s)$ $Q'_{iv} = Q'_{iv} \exp(-\lambda_i R/3600uv)$ $Q'_{ig} = Q'_{ig} \exp(-\lambda_i R/3600ug)$	
Q_{is}, Q_{iv}, Q_{ig}	Release Rate Measured release rate of radionuclide 'i' from a stack, vent, or ground level release point.	[μCi/sec]\

To comply with this specification, gaseous effluent radiation monitors have setpoints corresponding to an offsite skin dose rate at or below the limit (see Part II Section 2.6). In addition, compliance is assessed by calculating offsite skin dose rate based on periodic samples obtained per station procedures.

4.2.1.3 Non-Noble Gas Radionuclides: Organ Dose Rate

RECS limits the dose rate to any organ, due to radioactive materials in gaseous effluents released from a site to areas at and beyond the site boundary, to less than or equal to a dose rate of 1500 mrem/yr (See Part I Section 12.4.1)

Typically the adult is considered to be the limiting receptor in calculating dose rate to organs due to inhalation of non-noble gas radionuclides in gaseous effluents.

The dose rate to any adult organ due to inhalation is calculated by the following expression:

$$D^{inhal}_{ja} = (1E6)(R_a)\Sigma\{DFA_{ija}[(X/Q)_s Q'_{is} + (X/Q)_v Q'_{iv} + (X/Q)_g Q'_{ig}]\} \quad (4\text{-}3)$$

The summation is over non-noble gas radionuclides 'i'.

D^{inhal}_{ja} Inhalation Dose Rate [mrem/yr]

Rate of dose commitment to organ **j** of an individual in age group **a** due to inhalation of non-noble gas radionuclides released in gaseous effluents; **j** and **a** are chosen to correspond to an adult thyroid.

Q'_{is} Radionuclide Release Rate, Adjusted for Radiodecay [μCi/sec]
Q'_{iv}
Q'_{ig} Measured release rate of radionuclide 'i' from a stack, vent, or ground level release point, reduced to account for radiodecay in transit from the release point to the dose point.

RECS requires the dose rate due to non-noble gas radioactive materials in airborne effluents be determined to be within the above limit in accordance with a sampling and analysis program specified in Part I Table R12.4.1-1.

The adult organ dose rate due to inhalation is calculated in each sector at the location of the highest offsite χ/Q (see Table 4-3). The result for the sector with the highest organ inhalation dose rate is compared to the limit.

4.2.2 Time Averaged Dose from Noble Gas

4.2.2.1 Gamma Air Dose

RECS limits the gamma air dose due to noble gas effluents released from each reactor unit to areas at and beyond the unrestricted area boundary to the following:

- Less than or equal to 5 mrad per calendar quarter.
- Less than or equal to 10 mrad per calendar year.

The gamma air dose due to noble gases released in gaseous effluents is calculated by the following expression:

$$D_\gamma = (3.17E-8)\Sigma\{S_i A_{is} + V_i A_{iv} + G_i A_{ig}\} \quad (4\text{-}4)$$

The summation is over noble gas radionuclides i.

D_γ Gamma Air Dose [mrad]
Dose to air due to gamma radiation from noble gas radionuclides Released in gaseous effluents.

3.17E-8 Conversion Constant (seconds to years) [yr/sec]

S_i, V_i, G_i Gamma Air Dose Factor [(mrad/yr)/(μCi/sec)]

Gamma air dose rate at a specified location per unit of Radioactivity re4lease rate for radionuclide 'i' released from A stack, vent, or ground level release point, respectively. See Section 4.2.1, Section B.5 of Appendix B, and Table F-7 of Appendix F.

A_{is}, A_{iv}, A_{ig}	Cumulative Radionuclide Release Measured cumulative release of radionuclide 'i' over the time period of interest from a stack, vent, or ground level release point.	[μCi]

RECS Section 12.4 requires determination of cumulative and projected gamma air dose contributions due to noble gases for the current calendar quarter and the current calendar year at least once per 31 days.

Gamma air dose is calculated for the sector with the highest offsite (χ/Q) and is compared with the RECS limits on gamma air dose.

For a release attributable to a processing or effluent system shared by more than one reactor unit, the dose due to an individual unit is obtained by proportioning the effluents among the units sharing the system.

4.2.2.2 Beta Air Dose

RECS limits beta air dose due to noble gases in gaseous effluents released from each reactor unit to areas at and beyond the unrestricted area boundary to the following:

- Less than or equal to 10 mrad per calendar quarter.
- Less than or equal to 20 mrad per calendar year.

The beta air dose due to noble gases released in gaseous effluents is calculated by the following expression:

$$D_\beta = (3.17E-8)\Sigma\{ L_i \; X/Q)_s A'_{is} + (X/Q)_{iv} A'_{iv} + (X/Q_g)A_{ig}\} \qquad (4\text{-}5)$$

The summation is over noble gas radionuclides **i**.

D_β	Beta Dose Dose to air due to beta radiation from noble gas radionuclides released in gaseous effluents.	[mrad]
3.17E-8	Conversion Constant (seconds to years)	[yr/sec]
L_i	Beta Air Dose Factor	[(mrad/yr)/(μCi/m^3)]

Beta air dose rate per unit of radioactivity concentration for radionuclide **i**.

$(X/Q)_s$ Relative Concentration Factor [sec/m^3]
$(X/Q)_v$
$(X/Q)_g$ Radioactivity concentration at a specified location per unit of radioactivity release rate for a stack, vent, or ground level release.

A'_{is} Cumulative Radionuclide Release, [μCi]
A'_{iv} Adjusted for Radiodecay
A'_{ig}

Measured cumulative release of radionuclide 'i' over the time period of interest from a stack, vent, or ground level release point, reduced to account for radiodecay in transit from the release point to the dose point.

$$A'_{is} = A_{is} \exp(-\lambda_l R/3600u_s)$$

$$A'_{iv} = A_{iv} \exp(-\lambda_l R/3600u_v)$$

$$A'_{ig} = A_{ig} \exp(-\lambda_l R/3600u_g)$$

λ_l Radiological Decay Constant [hr^{1}]

R Downwind Range [m]
Distance from the release point to the dose point.

3600 Conversion Constant [sec/hr]
Converts hours to seconds.

u_s Average Wind Speed [m/sec]
u_v
u_g Average wind speed for a stack, vent, or ground level release.

A_{is}, A_{iv}, A_{ig} Cumulative Radionuclide Release [μCi]

Measured cumulative release of radionuclide **i** over the time period of interest from a stack, vent, or ground level release point, respectively.

RECS Section 12.4 requires determination of cumulative and projected beta air dose contributions due to noble gases for the current calendar quarter and the current calendar year at least once per 31 days.

Beta air dose is calculated for the sector with the highest offsite (χ/Q) and is compared with the RECS limit on beta air dose.

For a release attributable to a processing or effluent system shared by more than one reactor unit, the dose due to an individual unit is obtained by proportioning the effluents among the units sharing the system.

4.2.2.3 Whole Body Dose

The total (or whole) body dose, to any receiver is due, in part, to gamma radiation emitted from radioactivity in airborne effluents. This component is added to others to demonstrate compliance to the requirements of 40CFR190 and 10CFR20.

The total body dose component due to gamma radiation from noble gases released in gaseous effluents is calculated by the following expression:

$$D_{TB} = (0.7)(1.11)(3.17E-8) \times \Sigma\{\bar{S}_i A_{is} + \bar{V}_i A_{iv} + \bar{G}_i A_{ig}\} \qquad (4\text{-}6)$$

The summation is over noble gas radionuclides **i**.

D_{TB} Total Body Dose [mrem]
Dose to the total body due to gamma radiation from noble gas radionuclides released in gaseous effluents.

0.7 Shielding Factor; a dimensionless factor that accounts for shielding due to the occupancy of structures.

1.11 Conversion Constant (rads in air to rem in tissue) [mrem/mrad]

3.17E-8 Conversion Constant (seconds to years) [yr/sec]

$\bar{S}_i, \bar{V}_i, \bar{G}_i$ Gamma Total Body Dose Factor [(mrad/yr (μCi/sec)]

Gamma total body dose rate at a specified location per unit of radioactivity release rate for radionuclide"i" released from a stack, vent, or ground level release point. The attenuation of gamma radiation due to passage through 1 cm of body tissue of 1 g/cm^3 density is taken into account in calculating this quantity.

A_{is}, A_{iv}, A_{ig} Cumulative Radionuclide Release [μCi]

Measured cumulative release of radionuclide **i** over the time period of interest from a stack, vent, or ground level release point, respectively.

The total body dose is also calculated for the 40CFR190 and 10CFR20 compliance assessments. In some cases, the total body dose may be required in 10CFR50 Appendix I assessments (See Part II Table 1-1).

4.2.2.4 Skin Dose

There is no regulatory requirement to evaluate skin dose. However, this component is evaluated for reference as there is skin dose design objective contained in 10CFR50 Appendix I. Note that in the unlikely event that if beta air dose guideline is exceeded, then the skin dose will require evaluation.

The part of skin dose due to noble gases released in gaseous effluents is calculated by the following expression:

$$\dot{D}_s = (3.17E-8)\Sigma\{\bar{L}_i\,[X/Q)_s A'_{is} + (X/Q)_v A'_{iv} + (X/Q)_g A'_{ig}\} + (0.7)(1.11)[S_i A_{is} + V_i A_{iv} + G_i A_{ig}]\} \quad (4\text{-}7)$$

The summation is over noble gas radionuclides i.

$\dot{D}_s$ Skin Dose [mrem]

Dose rate to skin due to beta and gamma radiation from noble gas radionuclides release in gaseous effluents.

Q'_{is} Release Rate, Adjusted for Radiodecay [μCu/sec]
Q'_{iv}
Q'_{ig} Measured release rate of radionuclide 'i' from a stack, vent, or ground level release point, reduced to account for radiodecay in transit from the release point to the dose point:

$$Q'_{is} = Q_{is}\ \exp(-\lambda_i R/3600u_s)$$

$$Q'_{iv} = Q_{iv}\ \exp(-\lambda_i R/3600u_v)$$

$$Q'_{ig} = Q_{ig}\ \exp(-\lambda_i R/3600u_g$$

4.2.3 Time Averaged Dose from Non-Noble Gas Radionuclides

RECS provides the following limits, based on 10CFR50 Appendix I, on the dose to a member of the public from specified non-noble gas radionuclides in gaseous effluents released from each reactor unit to areas at and beyond the unrestricted area boundary:

- Less than or equal to 7.5 mrem to any organ during any calendar quarter
- Less than or equal to 15 mrem to any organ during any calendar year

The individual dose components are also required as part of the 40CFR190 assessments and combined as part of the 10CFR20 assessment (Part II Table 1-1). The dose due to radionuclides deposited on the ground is considered to be a component of the deep dose equivalent for 10CFR20 and 40CFR190 compliance and an organ (and total body) dose component for 10CFR50 Appendix I compliance.

The dose is calculated for releases in the time period under consideration.

Specifically, the dose is calculated as follows:

$$D^{NNG}_{ja} = D^{Inhal}_{ja} + D^{food}_{ja} \qquad (4\text{-}8)$$

D^{NNG}_{ja} Committed Dose Equivalent (CDE) Due to Non-Noble Gas Radionuclides [mrem]
Sum of the committed dose equivalents to organ j of an individual of age group a due to non-noble gas radionuclides released in gaseous effluents during a specified time period.

D^{Inhal}_{ja} Inhalation Committed Dose Equivalent (CDE) [mrem]
CDE to organ j of an individual of age group a due to inhalation of non-noble gas radionuclides released in gaseous effluents

D^{food}_{ja} Food Pathways Committed Dose Equivalent (CDE) [mrem]
CDE due to ingestion via food pathways (leafy vegetables, produce, milk, and meat) of non-noble gas radionuclides released in gaseous effluents.

RECS Section 12.4 requires cumulative and projected dose contributions for the current calendar quarter and the current calendar year for the specified non-noble gas radionuclides in airborne effluents to be determined at least once per 31 days.

To comply with this specification, each nuclear power station obtains and analyzes samples in accordance with the radioactive gaseous waste or gaseous effluent sampling and analysis program in its RETS. For each organ of each age group considered (adult/teenager/child/infant), the dose for each pathway is calculated in every sector (except for sectors over water bodies). The calculation is based on the location assumptions discussed below in conjunction with the pathway equations. For each organ of each age group, the doses are summed in each sector over all pathways. The result for the sector with the highest total dose is compared to the limit. The values used for (X/Q) and (D/Q) are shown in Table 4-3 through Table 4-5 and correspond to the applicable pathway location.

For a release attributable to a processing or effluent system shared by more than one reactor, the dose due to an individual unit is obtained by proportioning the effluents among the units sharing the system.

The dose evaluated is also included as part of the 10CFR20 and 40CFR190 assessment (See Part II Section 5).

4.2.3.1 Ground Plane

The dose due to ground deposition of radioactivity is considered to be a total body dose component and is calculated by the following expressions:

$$D^{gnd} = (24)(0.7)t_r\Sigma\{ DFG_i C^G_i\} \quad (4\text{-}9)$$

Where: $C^G_i = (d_i/\lambda_i)[1 - \exp(-\lambda_i t_b)]$

And: $d_i = [(1E6)/(24t_r)] \times [A'_{is}(D/Q)_s + A'_{iv}(D/Q)_v + A'_{ig}(D/Q)_g]$

The summation is over non-noble gas radionuclides'i'.

D^{gnd}	Ground Deposition Deep Dose Equivalent (DDE)	[mrem]
	DDE due to ground deposition of non-noble gas radionuclides released in gaseous effluents.	
24	Conversion Constant (days to hours)	[hr/day]
0.7	Shielding Factor; a dimensionless factor which accounts for shielding due to occupancy of structures.	
t_r	Release or Exposure Period	[days]
	Time period of the calculation (e.g., number of days in the quarter for a calendar quarter calculation).	
DFG_i	Ground Plane Dose Conversion Factor	[(mrem/hr)/(pCi/m^2)]
	Dose rate to the whole body per unit of ground radioactivity concentration due to standing on ground uniformly contaminated with radionuclide 'i'. See Part II Table 4-14.	
C^G_i	Ground Plane Concentration	[pCi/m^2]
	Concentration of radionuclide 'i' on the ground.	

d_i	Deposition Rate	[(pCi/hr)/m^2]
	Rate at which radionuclide 'i' is deposited onto the ground.	
λ_i	Radiological Decay Constant	[hr^1]
	Radiological decay constant for radionuclide 'i'.	
t_b	Time Period of Ground Deposition	[hr]
	Time period during which the radioactivity on the ground is assurned to have been deposition (See Part II Table 1-3)	
1E6	Conversion Constant (μCi to pCi)	
A'_{is}	Cumulative Radionuclide	[μCi]
A'_{iv}	Release, Adjusted for Radiodecay	
A'_{ig}	Measured cumulative release of radionuclide 'i' from a stack, vent, or ground level release point, reduced to account for radiodecay in transit from the release point to the dose point.	
$(D/Q)_s$	Relative Deposition Factor	[m^{-2}]
$(D/Q)_v$		
$(D/Q)_g$	Rate of deposition of radioactivity at a specified location per unit of radioactivity release rate for a stack, vent, or ground level release.	

Note that ground plane dose factors are only given for the total body and no age group. Doses to other organs are assumed to be equal to the total body dose. All age groups are assumed to receive the same dose.

The deep dose equivalent (DDE) due to ground deposition is determined for each sector using the highest calculated offsite value of **D/Q** for that sector.

The ground plane exposure pathway is considered to exist at all locations.

4.2.3.2 Inhalation

The committed dose equivalent (CDE) due to inhalation is calculated by the following expression:

$$D^{inhal}_{ja} = (3.17E\text{-}8)(1E6)(R_a) \times \Sigma\{DFA_{ija}[(X/Q)_s A'_{is} + (X/Q)_{iv} A'_{iv} + (X/Q)_g A'_{ig}]\} \qquad (4\text{-}10)$$

The summation is over non-noble gas radionuclides 'i'.

D^{inhal}_{ja} Inhalation Committed Dose Equivalent (CDE) [mrem]

CDE to organ j of an individual in age group a due to inhalation of non-noble gas radionuclides released in gaseous effluents.

3.17E-8 Conversion Constant (seconds to years) [yrs/sec]

1E6 Conversion Constant (μCi to pCi)

R_a Individual Air Inhalation Rate [m^3/yr]

The air intake rate for individuals in age group 'a'.

DFA_{ija} Inhalation Dose Commitment Factor [mrem/pCi]

Dose commitment to organ 'j' of an individual in age group 'a' per unit of activity of radionuclide 'i' inhaled.

Assessment	Dose Factor	Age Group
10CFR50 App. I	Reg. Guide 1.109 Tables E-7 through E-10.	All (four)
10CFR20/40CFR190	Federal Guidance Report-11; Table 2.2	Adult only (average individual)

$(X/Q)_s$
$(X/Q)_v$
$(X/Q)_g$ Relative Effluent Concentration

Radioactivity concentration at a specified location per unit of radioactivity release rate.

$A'_{is}, A'_{iv}, A'_{ig}$ Cumulative Radionuclide Release, Adjusted for Radiodecay [μCi]

Measured cumulative release of radionuclide "i" from a stack, vent or ground level release point, reduced to account for radiodecay in transit from the release point to the dose point.

The inhalation exposure pathway is considered to exist at all locations.

The CDE due to inhalation is determined for each sector using the highest calculated offsite value of X/Q for that sector.

4.2.3.3 Ingestion: Vegetation

Food ingestion pathway doses are calculated at locations indicated by the land use census survey. If no real pathway exists within 5 miles of the station, the cow-milk pathway is assumed to be located at 5 miles. Food pathway calculations are not

made for sectors in which the offsite regions near the station are over bodies of water.

$$D^{food}_{ja}=(t_r/365) \times \Sigma\{DFI_{ija}[i^V_{ia} + i^P_{ia} + i^m_{ia} + i^F_{ia}]\} \quad (4\text{-}11)$$

The summation is over non-noble gas radionuclides 'i'.

D^{food}_{ja}	Food Pathways Committed Dose Equivalent (CDE) commitment to organ j of an individual in age group a due to ingestion via food pathways (leafy vegetables, produce, milk, and meat) of non-noble gas radionuclides relased in gaseous effluents.	[mrem]
t_r	Time Period of Release or Exposure	[days]

(e.g., number of days in a quarter for a calendar quarter calculation).

1/365	Conversion Constant (days to years)	[yr/day]
DFI_{ija}	Ingestion Dose Commitment Factor	[mrem/pCi]

Dose commitment to organ 'j' of an individual in age group 'a' per unit of activity of radionuclilde 'i' ingested.

Assessment	Dose Factor	Age Group
10CFR50 App. I	Reg. Guide 1.109 Tables E-11 through E-14.	All (four)
10CFR20/40CFR190	Federal Guidance Report-11; Table 2.2	Adult only (average individual)

$i^V_{ia}, I^P_{ia}, i^M_{ia}, i^F_{ia}$	Rate of Ingestion of Activity Activity of radionuclide 'i' ingested annually by an individual in age group a from, respectively, the following:	[pCi/yr]

- Leafy vegetables
- Produce (nonleafy vegetables, fruits, and grain).
- Milk
- Meat (flesh)

Calculated as follows:

$$i^V_{ia} = U^V_a f_v C^V$$
$$i^P = U^P_a f_P C^P i$$
$$i^M_{ia} = U^M_a C^M_i$$

$$i^F_{ia} = U^F_a C^F_i$$

U^V	Food Product Consumption Rate	[kg/yr]
U^P_a		[kg/yr]
U^M_a		[L/yr]
U^F_a		[kg/yr]

Annual consumption (usage) rate of leafy vegetables, produce, milk, or meat, respectively, for individuals in age group 'a'.

f_V	Food Product Affected Fraction
f_P	Fraction of ingested leafy vegetables (V) or produce (P) grown in the garden of interest.

C^V_i	Food Product Radioactivity Concentration	[pCi/kg]
C^P_i		[pCi/kg]
C^M_i		[pCi/L]
C^F_i		[pCi/kg]

C^V_i and C^P_i represent, respectively, the average concentration of radionuclide I in leafy vegetables and produce grown in the garden of interest. Calculated from the amount of radioactivity released and the relative deposition factor D/Q at the garden of interest.

C^M_i and C^F_i represent, respectively, the average concentration of radionuclide I in milk and meat from the producer of interest. Calculated from the amount of radioactivity released and the relative deposition factor D/Q at the locations of the producers of interest.

Where: The radioactivity concentration in leafy vegetables (C^V_i), produce C^P_i), or other vegetation is calculated b y the following expression:

$$C_I = [(d_I)(r)/(Y_v)(\lambda_{EI})] \times [1 - \exp(-\lambda_{EI} t_e)]\ [\exp(-\lambda_I t_h)](f_f)$$

C_i	Food Product Radioactivity Concentration	[pCi/kg]
	Average concentration of radionuclide 'i' in leafy vegetables, produce, or other vegetation.	
d_i	Deposition Rate	[(pCi/hr)/m^2]
	Rate at which 'i' is deposited on the ground.	
	Calculated from the amount of radioactivity released and the relative deposition factor D/Q at the location of interest	
r	Vegetation Retention Factor	
	Fraction of deposited activity retained on vegetation.	
Y_V	Agricultural Productivity	[kg/m^2]
	The quantity of vegetation produced per unit area of the land on which the vegetation is grown.	
λ_{Ei}	Effective Decay Constant Effective removal rate constant for radionuclide 'i' from vegetation:	[hr^1]
	$\lambda_{Ei} = \lambda_I + \lambda_W$	
λ_I	Radiological Decay Constant	[hr^1]
	Radiological decay constant for radionuclide 'i'.	
λ_W	Weathering Decay Constant	[hr^1]
	Removal constant for physical loss by weathering.	
t_e	Effective Vegetation Exposure Time	[hr]
	Time that vegetation is exposed to contamination during the growing season.	
t_h	Harvest to Consumption Time	[hr]
	Time between harvest and consumption.	

f_f Seasonal Growing Factor
Factor which accounts for the seasonal growth of vegetation.
It has the value '1' during the growing season, '0' otherwise.

4.2.3.4 Ingestion: Milk

The radioactivity concentration in milk is calculated by the following expressions:

$$C^M_i = F_M C^f_i W_f \exp(-\lambda_i t_M)$$

$$C^f_i = F_a f_g C^g_i + (1 - f_a)C^s_i + F_a(1 - f_g)C^s_i \quad (4\text{-}12)$$

C^M_i Milk Radioactivity Concentration [pCi/L]

Average concentration of Radionuclide 'i' in milk from the producer of interest.

F_M Milk Fraction [days/L]

Fraction of an animal's daily intake of radionuclide i which appears in each liter of milk (pCi/L in milk per day pCi/day ingested by the animal).

C^f_i Feed Concentration [pCi/kg]

Average concentration of radionuclide 'i' in animal feed.

W_f Feed Consumption [kg/day]

Amount of feed consumed by the animal each day.

λ_i Radiological Decay Constant [hr^{-1}]

Radiological Decay constant for radionuclide 'i'.

t_m Milk Transport Time [hr]

Average time from the production of milk to its consumption.

f_a Pasture Time Fraction

Fraction of time that animals graze on pasture.

f_g Pasture Grass Fraction

Fraction of daily feed that is pasture grass when animals graze on pasture.

C^g_i Pasture Grass Concentration [pCi/kg

Concentration of radionuclide 'i' in pasture grass.

C^s_i Stored Feed Concentration [pCi/kg]

Concentration of radionuclide 'i' in stored feed.

4.2.3.5 Ingestion: Meat

The radioactivity concentration in meat is calculated by the following expression:

$$C^F_i = F_F C^f_i W_f \exp(-\lambda_i t_s) \quad (4\text{-}13)$$

C^F_i Meat Radioactivity Rate [pCi/kg]

Average concentration opf radionuclide 'i' in meat from the producer of interest.

F_F Meat Fraction [days/kg]

Fraction of an animal's daily intake of radionuclide 'i' which appears in each kilogram of flesh (pCi/kg in meat per pCi/day ingested by the animal).

C^f_i Feed Concentration [pCi/kg]

Average concentration of radionuclide 'i' in animal feed.

W_f Feed Consumption [kg/day]

Amount of feed consumed by the animal each day.

λ_i Radiological Decay Constant [hr^1]
Radiological decay constant for radionuclide 'i'.

t_s Time From Slaughter to Consumption [hr]

All other terms have been previously defined.

Table 4-1

Critical Ranges

Direction	Unrestricted Area Boundary[a] (m)	Restricted Area Boundary (m)	Nearest Resident[b] (m)	Nearest Dairy Farm within 5 miles[c] (m)
N	1036	1036	6300	None
NNE	1378	1378	2800	None
NE	2408	1609	3400	None
ENE	4450	1079	5300	None
E	1996	833	5200	None
ESE	1465	845	2300	None
SE	969	969	2700	None
SSE	838	698	2900	None
S	829	620	2400	None
SSW	835	835	1100	None
SW	628	628	1600	None
WSW	533	533	2400	None
W	524	524	1300	None
WNW	643	643	1400	None
NW	762	762	2900	None
NNW	890	890	2700	7400

a Used in calculating the meteorological dose factors in Tables 4-3, 4-4, 4-6, and 4-7.

b 1994 annual survey by Teledyne Isotopes Midwest Laboratories. The distances are rounded to the nearest conservative 100 meters.

c 1994 annual milk animal census by Teledyne Isotopes Midwest Laboratories. Used in calculating the D/Q values in Table 4-5. The distances are rounded to the nearest conservative 100 meters. A default value of 8000 meters is used when there are no dairies within 5 miles.

Table 4-2

Average Wind Speeds

Downwind Direction	Average Wind Speed (m/sec)[a]		
	Elevated	Vent	Ground Level
N	9.7	7.7	4.9
NNE	10.1	8.0	5.1
NE	9.2	7.4	4.9
ENE	9.0	7.2	4.8
E	9.5	7.8	5.2
ESE	9.7	8.4	5.9
SE	8.1	7.4	5.9
SSE	7.4	8.7	5.0
S	6.7	5.9	4.3
SSW	5.6	3.7	2.9
SW	5.5	4.1	3.1
WSW	6.9	5.4	3.9
W	7.6	6.5	4.5
WNW	7.5	6.3	4.3
NW	7.5	6.2	3.9
NNW	8.3	6.7	4.3

[a] Based on LaSalle site meteorological data, January 1978 through December 1987. See Sargent & Lundy, Analysis and Technology Division, LaSalle calculation no. ATD-0164, revisions 0, 1, 2, and 3.

Table 4-3

X/Q and D/Q Maxima at or Beyond the Unrestricted Area Boundary

Downwind Direction	Elevated(Stack) Release				Mixed Mode(Vent) Release			Ground Level Release		
	Radius (meters)	X/Q (sec/m**3)	Radius (meters)	D/Q (1/m**2)	Radius (meters)	X/Q (sec/m**3)	D/Q (1/m**2)	Radius (meters)	X/Q (sec/m**3)	D/Q (1/m**2)
N	5433.	6.1232E-09	1836.	7.2032E-10	4000.	6.2091E-09	8.3118E-10	1836.	1.5314E-06	1.6191E-08
NNE	1378.	7.0452E-09	1378.	9.0391E-10	5433.	7.1022E-09	9.6594E-10	1378.	9.7371E-07	7.0951E-09
NE	4400.	5.5332E-09	2400.	4.2452E-10	2400.	5.6092E-09	4.8348E-10	2400.	5.9972E-07	2.3771E-09
ENE	5200.	5.0000E-09	4450.	2.0219E-10	4450.	4.9092E-09	2.0214E-10	4450.	1.4968E-07	6.7842E-10
E	5200.	5.0452E-09	1996.	5.4152E-10	1996.	6.1982E-09	6.3962E-10	1996.	4.0708E-07	2.9000E-09
ESE	5200.	6.0902E-09	1500.	8.0900E-10	1445.	8.2902E-09	1.2272E-09	1445.	7.2238E-07	1.0000E-09
SE	5433.	7.1102E-09	1500.	7.5452E-10	949.	1.0070E-08	1.7991E-09	949.	1.1371E-06	1.1230E-08
SSE	5200.	6.7171E-09	1500.	7.1700E-10	838.	1.3132E-08	2.1242E-09	838.	1.1261E-06	1.0442E-08
S	5433.	5.9102E-09	1500.	6.1302E-10	829.	8.4021E-09	1.3032E-09	829.	1.1125E-06	1.0391E-08
SSW	4000.	5.2692E-09	833.	5.7931E-10	833.	7.3222E-09	9.9999E-10	833.	7.9457E-07	5.3592E-09
SW	4000.	6.7672E-09	628.	8.5452E-10	628.	2.2242E-08	2.1542E-09	628.	1.0442E-06	1.4971E-08
WSW	4000.	8.0032E-09	533.	8.5272E-10	548.	3.1091E-08	2.0191E-09	533.	2.1012E-06	1.9702E-08
W	4437.	9.3542E-09	1500.	6.8112E-10	548.	1.3442E-08	1.6292E-09	534.	2.8392E-06	2.4132E-08
WNW	7242.	3.9162E-09	1500.	3.1732E-10	643.	5.0632E-09	9.0771E-10	643.	2.4278E-06	1.9002E-08
NW	7242.	3.7602E-09	1500.	3.1102E-10	5433.	4.1272E-09	6.6602E-10	742.	1.9042E-06	1.0372E-08
NNW	6437.	4.3002E-09	1500.	3.0002E-10	6437.	4.0952E-09	5.3702E-10	800.	1.0052E-06	8.0402E-09

LASALLE 0192 METEOROLOGICAL DATA 1/78 - 12/87

Based on Sargent & Lundy, Nuclear Safeguards and Licensing Division, LaSalle calculation no. ATD-0139, "N-16 Skyshine Ground Level Doses from LaSalle Turbine Systems & Piping, Revision 0.

Used for beta air, beta skin, and inhalation dose pathways. See ODCM part II sections 4.2.2.2, 4.2.2.4, and 4.2.3.2.

Used for produce and leafy vegetable pathways. See ODCM part II section 4.2.3.

Table 4-4

X/Q and D/Q Maxima at or Beyond the Restricted Area Boundary

Downwind Direction	Elevated(Stack) Release				Mixed Mode(Vent) Release			Ground Level Release		
	Radius (meters)	X/Q (sec/m**3)	Radius (meters)	D/Q (1/m**2)	Radius (meters)	X/Q (sec/m**3)	D/Q (1/m**2)	Radius (meters)	X/Q (sec/m**3)	D/Q (1/m**2)
N	5633.	6.123E-09	1036.	7.203E-10	6000.	6.289E-09	8.311E-10	1036.	1.524E-06	1.019E-08
NNE	1378.	7.045E-09	1378.	9.831E-10	5633.	7.102E-09	9.659E-10	1378.	9.737E-07	7.095E-09
NE	4400.	5.535E-09	1609.	6.556E-10	1609.	6.052E-09	7.953E-10	1609.	7.003E-07	4.747E-09
ENE	5200.	5.086E-09	1079.	6.376E-10	1079.	6.579E-09	9.861E-10	1079.	1.128E-06	7.788E-09
E	5200.	5.865E-09	1500.	6.659E-10	1055.	7.712E-09	1.160E-09	1055.	1.270E-06	8.779E-09
ESE	5200.	8.000E-09	1500.	8.896E-10	1055.	9.981E-09	1.546E-09	1055.	1.192E-06	1.021E-08
SE	5633.	7.116E-09	1500.	7.505E-10	969.	1.087E-08	1.709E-09	969.	1.137E-06	1.123E-08
SSE	5200.	6.717E-09	698.	7.210E-10	698.	1.444E-08	2.403E-09	698.	1.492E-06	1.428E-08
S	5633.	5.910E-09	1500.	6.136E-10	820.	8.455E-09	1.312E-09	820.	1.130E-06	1.058E-08
SSW	6000.	5.269E-09	835.	5.793E-10	835.	7.322E-09	9.999E-10	835.	7.940E-07	5.359E-09
SW	6000.	6.767E-09	628.	8.545E-10	628.	2.224E-08	2.154E-09	628.	1.864E-06	1.407E-08
WSW	6000.	6.065E-09	533.	6.527E-10	540.	2.105E-08	2.079E-09	533.	2.101E-06	1.970E-08
W	6437.	5.354E-09	1500.	4.811E-10	540.	1.344E-08	1.629E-09	524.	2.830E-06	2.453E-08
WNW	7242.	3.916E-09	1500.	3.175E-10	643.	5.963E-09	9.071E-10	643.	2.429E-06	1.508E-08
NW	7242.	3.766E-09	1500.	3.118E-10	5633.	4.127E-09	6.660E-10	762.	1.984E-06	1.055E-08
NNW	6437.	4.240E-09	1500.	3.806E-10	6437.	4.095E-09	5.574E-10	890.	1.605E-06	8.840E-09

LASALLE SITE METEOROLOGICAL DATA 1/78 - 12/87

Table 4-5

D/Q at the Nearest Milk Cow and Meat Animal Locations Within 5 Miles

Downwind Direction	Nearest Milk Cow D/Q(1/m**2) Radius (meters)	Elevated Release	Mixed Release	Ground Release	Nearest Meat Animal D/Q(1/m**2) Radius (meters)	Elevated Release	Mixed Release	Ground Release
N	8000.	9.711E-11	1.006E-10	2.915E-10	6400.	1.107E-10	1.436E-10	4.352E-10
NNE	8000.	1.151E-10	1.170E-10	1.273E-10	3100.	4.257E-10	4.320E-10	1.760E-09
NE	8000.	8.819E-11	9.468E-11	2.851E-10	5600.	1.530E-10	1.649E-10	5.403E-10
ENE	8000.	8.559E-11	8.420E-11	2.381E-10	5000.	1.719E-10	1.725E-10	5.519E-10
E	8000.	1.056E-10	9.772E-11	2.587E-10	8000.	1.056E-10	9.772E-11	2.587E-10
ESE	8000.	1.450E-10	1.356E-10	3.010E-10	8000.	1.450E-10	1.356E-10	3.010E-10
SE	8000.	1.242E-10	1.322E-10	2.881E-10	7600.	1.354E-10	1.437E-10	3.160E-10
SSE	8000.	1.174E-10	1.278E-10	2.152E-10	7600.	1.279E-10	1.389E-10	2.360E-10
S	8000.	9.947E-11	9.895E-11	2.065E-10	8000.	9.947E-11	9.895E-11	2.065E-10
SSW	8000.	8.647E-11	9.097E-11	1.077E-10	8000.	8.647E-11	9.097E-11	1.077E-10
SW	8000.	1.096E-10	1.210E-10	1.793E-10	8000.	1.096E-10	1.210E-10	1.793E-10
WSW	8000.	1.017E-10	1.083E-10	1.940E-10	8000.	1.017E-10	1.083E-10	1.940E-10
W	8000.	8.494E-11	1.094E-10	2.354E-10	4800.	1.808E-10	2.362E-10	5.866E-10
WNW	8000.	5.824E-11	6.886E-11	1.994E-10	5200.	1.117E-10	1.331E-10	4.312E-10
NW	8000.	5.416E-11	6.119E-11	1.828E-10	6400.	7.771E-11	9.022E-11	2.710E-10
NNW	7400.	7.317E-11	7.264E-11	2.269E-10	7600.	7.002E-11	6.954E-11	2.163E-10

Location Site Meteorological Data 1978 - 1987

Based on Sargent & Lundy, Nuclear Safeguards and Licensing Division, LaSalle calculation no. ATD-0139, "N-16 Skyshine Ground Level Doses from LaSalle Turbine Systems & Piping, Revision 0.

Table 4-6 (Page 1 of 15)

Maximum Offsite Finite Plume Gamma Dose Factors Based on 1 cm Depth at the Unrestricted Area Boundary for Kr-83m

Downwind Direction	Unrestricted Area Bound (meters)	Elevated(Stack) Release Radius (meters)	S (mrad/yr)/(uCi/sec)	SMAX	Mixed Mode(Vent) Release Radius (meters)	V (mrad/yr)/(uCi/sec)	VMAX	Ground Level Release Radius (meters)	G (mrad/yr)/(uCi/sec)	GMAX
N	1036.	1036.	4.787E-07	3.609E-07	1036.	5.281E-07	3.982E-07	1036.	1.785E-04	1.346E-04
NNE	1378.	1378.	8.751E-07	6.599E-07	1378.	6.905E-07	5.206E-07	1378.	1.139E-04	8.586E-05
NE	2408.	2408.	6.471E-07	4.879E-07	2408.	6.697E-07	5.049E-07	2408.	4.355E-05	3.284E-05
ENE	4450.	4450.	5.700E-07	4.298E-07	4450.	5.653E-07	4.262E-07	4450.	1.466E-05	1.105E-05
E	1996.	1996.	4.687E-07	3.534E-07	1996.	7.559E-07	5.700E-07	1996.	5.491E-05	4.140E-05
ESE	1465.	1465.	5.252E-07	3.960E-07	1465.	1.002E-06	7.559E-07	1465.	8.270E-05	6.236E-05
SE	969.	969.	3.545E-07	2.673E-07	969.	1.267E-06	9.554E-07	969.	1.333E-04	1.005E-04
SSE	838.	838.	3.051E-07	2.301E-07	838.	1.512E-06	1.140E-06	838.	1.323E-04	9.978E-05
S	829.	829.	2.840E-07	2.141E-07	829.	1.040E-06	7.842E-07	829.	1.330E-04	1.003E-04
SSW	835.	835.	3.185E-07	2.401E-07	835.	1.071E-06	8.076E-07	835.	9.326E-05	7.032E-05
SW	628.	628.	3.177E-07	2.395E-07	628.	2.826E-06	2.131E-06	628.	2.305E-04	1.738E-04
WSW	533.	533.	2.617E-07	1.973E-07	533.	2.674E-06	2.017E-06	533.	2.568E-04	1.936E-04
W	524.	524.	2.327E-07	1.754E-07	524.	1.658E-06	1.250E-06	524.	3.352E-04	2.527E-04
WNW	643.	643.	1.714E-07	1.292E-07	643.	7.235E-07	5.455E-07	643.	2.728E-04	2.057E-04
NW	762.	762.	1.744E-07	1.315E-07	762.	4.391E-07	3.311E-07	762.	2.219E-04	1.673E-04
NNW	890.	890.	2.397E-07	1.807E-07	890.	3.334E-07	2.514E-07	890.	1.823E-04	1.374E-04

LASALLE SITE METEOROLOGICAL DATA 1/78 - 12/87

Based on Sargent & Lundy, Analysis and Technology Division, LaSalle calculation no. ATD-0164, revisions 0, 1, 2, and 3.

Table 4-6 (Page 2 of 15)

Maximum Offsite Finite Plume Gamma Dose Factors Based on 1 cm Depth at the Unrestricted Area Boundary for Kr-85m

Downwind Direction	Unrestricted Area Bound (meters)	Elevated(Stack) Release Radius (meters)	S (mrad/yr)/(uCi/sec)	SBAR	Mixed Mode(Vent) Release Radius (meters)	V (mrad/yr)/(uCi/sec)	VBAR	Ground Level Release Radius (meters)	G (mrad/yr)/(uCi/sec)	GBAR
N	1036.	1036.	5.747E-05	5.560E-05	1036.	6.602E-05	6.388E-05	1036.	9.640E-04	9.252E-04
NNE	1378.	1378.	5.063E-05	4.896E-05	1378.	5.514E-05	5.334E-05	1378.	6.776E-04	6.496E-04
NE	2408.	2408.	2.592E-05	2.506E-05	2408.	2.727E-05	2.636E-05	2408.	2.969E-04	2.849E-04
ENE	4450.	4450.	1.351E-05	1.304E-05	4450.	1.332E-05	1.286E-05	4450.	1.156E-04	1.111E-04
E	1996.	1996.	2.705E-05	2.616E-05	1996.	2.863E-05	2.767E-05	1996.	3.557E-04	3.412E-04
ESE	1465.	1465.	4.351E-05	4.209E-05	1465.	4.624E-05	4.470E-05	1465.	5.201E-04	4.989E-04
SE	969.	969.	5.596E-05	5.415E-05	969.	6.610E-05	6.391E-05	969.	7.793E-04	7.470E-04
SSE	838.	838.	5.518E-05	5.339E-05	838.	6.630E-05	6.410E-05	838.	7.683E-04	7.364E-04
S	829.	829.	4.712E-05	4.560E-05	829.	5.330E-05	5.154E-05	829.	7.986E-04	7.657E-04
SSW	835.	835.	4.422E-05	4.279E-05	835.	5.351E-05	5.174E-05	835.	5.684E-04	5.450E-04
SW	628.	628.	7.281E-05	7.046E-05	628.	9.952E-05	9.618E-05	628.	1.285E-03	1.231E-03
WSW	533.	533.	7.757E-05	7.507E-05	533.	9.714E-05	9.388E-05	533.	1.389E-03	1.331E-03
W	524.	524.	7.601E-05	7.356E-05	524.	9.705E-05	9.385E-05	524.	1.687E-03	1.614E-03
WNW	643.	643.	5.284E-05	5.116E-05	643.	6.615E-05	6.399E-05	643.	1.327E-03	1.270E-03
NW	762.	762.	4.668E-05	4.518E-05	762.	5.680E-05	5.503E-05	762.	1.094E-03	1.047E-03
NNW	890.	890.	4.683E-05	4.532E-05	890.	5.142E-05	4.976E-05	890.	9.282E-04	8.885E-04

LASALLE SITE METEOROLOGICAL DATA 1/78 - 12/87

Table 4-6 (Page 3 of 15)

Maximum Offsite Finite Plume Gamma Dose Factors Based on 1 cm Depth at the Unrestricted Area Boundary for Kr-85

Downwind Direction	Unrestricted Area Bound (meters)	Elevated(Stack) Release Radius (meters)	S (mrad/yr)/(uCi/sec)	SBAR	Mixed Mode(Vent) Release Radius (meters)	V (mrad/yr)/(uCi/sec)	VBAR	Ground Level Release Radius (meters)	G (mrad/yr)/(uCi/sec)	GBAR
N	1036.	1036.	8.547E-07	8.265E-07	1036.	9.889E-07	9.563E-07	1036.	1.054E-05	1.021E-05
NNE	1378.	1378.	7.389E-07	7.068E-07	1378.	8.077E-07	7.811E-07	1378.	7.474E-06	7.227E-06
NE	2408.	2408.	3.651E-07	3.530E-07	2408.	3.909E-07	3.780E-07	2408.	3.363E-06	3.252E-06
ENE	4450.	4450.	1.885E-07	1.823E-07	4450.	1.856E-07	1.795E-07	4450.	1.377E-06	1.332E-06
E	1996.	1996.	3.912E-07	3.782E-07	1996.	4.096E-07	3.961E-07	1996.	4.008E-06	3.876E-06
ESE	1465.	1465.	6.359E-07	6.149E-07	1465.	6.632E-07	6.413E-07	1465.	5.783E-06	5.593E-06
SE	969.	969.	8.386E-07	8.110E-07	969.	9.583E-07	9.267E-07	969.	8.555E-06	8.273E-06
SSE	838.	838.	8.350E-07	8.075E-07	838.	9.612E-07	9.294E-07	838.	8.432E-06	8.154E-06
S	829.	829.	7.262E-07	7.023E-07	829.	8.067E-07	7.801E-07	829.	8.741E-06	8.453E-06
SSW	835.	835.	6.857E-07	6.630E-07	835.	8.402E-07	8.124E-07	835.	6.270E-06	6.063E-06
SW	628.	628.	1.142E-06	1.104E-06	628.	1.494E-06	1.444E-06	628.	1.401E-05	1.355E-05
WSW	533.	533.	1.211E-06	1.171E-06	533.	1.433E-06	1.386E-06	533.	1.510E-05	1.460E-05
W	524.	524.	1.172E-06	1.134E-06	524.	1.443E-06	1.395E-06	524.	1.824E-05	1.763E-05
WNW	643.	643.	8.185E-07	7.915E-07	643.	1.000E-06	9.670E-07	643.	1.436E-05	1.389E-05
NW	762.	762.	7.192E-07	6.954E-07	762.	8.694E-07	8.407E-07	762.	1.188E-05	1.148E-05
NNW	890.	890.	7.128E-07	6.893E-07	890.	7.849E-07	7.590E-07	890.	1.011E-05	9.778E-06

LASALLE SITE METEOROLOGICAL DATA 1/78 - 12/87

Table 4-6 (Page 4 of 15)

Maximum Offsite Finite Plume Gamma Dose Factors Based on 1 cm Depth at the Unrestricted Area Boundary for Kr-87

Downwind Direction	Unrestricted Area Bound (meters)	Elevated(Stack) Release Radius (meters)	S (mrad/yr)/(uCi/sec)	SBAR	Mixed Mode(Vent) Release Radius (meters)	V (mrad/yr)/(uCi/sec)	VBAR	Ground Level Release Radius (meters)	G (mrad/yr)/(uCi/sec)	GBAR
N	1036.	1036.	3.226E-04	3.135E-04	1036.	3.758E-04	3.652E-04	1036.	2.879E-03	2.795E-03
NNE	1378.	1378.	2.672E-04	2.597E-04	1378.	3.005E-04	2.920E-04	1378.	2.019E-03	1.960E-03
NE	2408.	2408.	1.283E-04	1.246E-04	2408.	1.359E-04	1.320E-04	2408.	8.605E-04	8.355E-04
ENE	4450.	4450.	5.904E-05	5.737E-05	4450.	5.859E-05	5.692E-05	4450.	3.133E-04	3.042E-04
E	1996.	1996.	1.412E-04	1.372E-04	1996.	1.458E-04	1.417E-04	1996.	1.030E-03	9.998E-04
ESE	1465.	1465.	2.351E-04	2.284E-04	1465.	2.426E-04	2.357E-04	1465.	1.545E-03	1.500E-03
SE	969.	969.	3.211E-04	3.120E-04	969.	3.612E-04	3.510E-04	969.	2.355E-03	2.287E-03
SSE	838.	838.	3.254E-04	3.162E-04	838.	3.655E-04	3.552E-04	838.	2.329E-03	2.262E-03
S	829.	829.	2.850E-04	2.770E-04	829.	3.081E-04	2.994E-04	829.	2.431E-03	2.361E-03
SSW	835.	835.	2.742E-04	2.665E-04	835.	3.400E-04	3.305E-04	835.	1.706E-03	1.657E-03
SW	628.	628.	4.614E-04	4.484E-04	628.	5.936E-04	5.769E-04	628.	3.903E-03	3.790E-03
WSW	533.	533.	4.880E-04	4.743E-04	533.	5.683E-04	5.523E-04	533.	4.251E-03	4.128E-03
W	524.	524.	4.675E-04	4.543E-04	524.	5.708E-04	5.547E-04	524.	5.136E-03	4.986E-03
WNW	643.	643.	3.224E-04	3.133E-04	643.	3.914E-04	3.804E-04	643.	4.001E-03	3.884E-03
NW	762.	762.	2.823E-04	2.743E-04	762.	3.397E-04	3.301E-04	762.	3.276E-03	3.180E-03
NNW	890.	890.	2.747E-04	2.669E-04	890.	3.031E-04	2.945E-04	890.	2.763E-03	2.683E-03

LASALLE SITE METEOROLOGICAL DATA 1/78 - 12/87

Table 4-6 (Page 5 of 15)

Maximum Offsite Finite Plume Gamma Dose Factors Based on 1 cm Depth at the Unrestricted Area Boundary for Kr-88

Downwind Direction	Unrestricted Area Bound (meters)	Elevated(Stack) Release Radius (meters)	S (mrad/yr)/(uCi/sec)	SBAR	Mixed Mode(Vent) Release Radius (meters)	V (mrad/yr)/(uCi/sec)	VBAR	Ground Level Release Radius (meters)	G (mrad/yr)/(uCi/sec)	GBAR
N	1036.	1036.	8.602E-04	8.374E-04	1036.	1.003E-03	9.769E-04	1036.	6.988E-03	6.787E-03
NNE	1378.	1378.	7.111E-04	6.922E-04	1378.	7.989E-04	7.777E-04	1378.	4.940E-03	4.798E-03
NE	2408.	2408.	3.435E-04	3.344E-04	2408.	3.694E-04	3.596E-04	2408.	2.182E-03	2.120E-03
ENE	4450.	4450.	1.848E-04	1.804E-04	4450.	1.646E-04	1.602E-04	4450.	8.502E-04	8.263E-04
E	1996.	1996.	3.781E-04	3.680E-04	1996.	3.928E-04	3.824E-04	1996.	2.599E-03	2.525E-03
ESE	1465.	1465.	6.235E-04	6.070E-04	1465.	6.445E-04	6.273E-04	1465.	3.816E-03	3.707E-03
SE	969.	969.	8.537E-04	8.311E-04	969.	9.571E-04	9.317E-04	969.	5.712E-03	5.549E-03
SSE	838.	838.	8.671E-04	8.442E-04	838.	9.702E-04	9.445E-04	838.	5.645E-03	5.483E-03
S	829.	829.	7.696E-04	7.492E-04	829.	8.417E-04	8.194E-04	829.	5.862E-03	5.695E-03
SSW	835.	835.	7.427E-04	7.231E-04	835.	9.375E-04	9.127E-04	835.	4.167E-03	4.048E-03
SW	628.	628.	1.246E-03	1.213E-03	628.	1.601E-03	1.559E-03	628.	9.396E-03	9.126E-03
WSW	533.	533.	1.314E-03	1.279E-03	533.	1.525E-03	1.485E-03	533.	1.017E-02	9.882E-03
W	524.	524.	1.249E-03	1.216E-03	524.	1.520E-03	1.480E-03	524.	1.225E-02	1.190E-02
WNW	643.	643.	8.669E-04	8.440E-04	643.	1.045E-03	1.017E-03	643.	9.595E-03	9.317E-03
NW	762.	762.	7.580E-04	7.379E-04	762.	9.125E-04	8.884E-04	762.	7.895E-03	7.666E-03
NNW	890.	890.	7.369E-04	7.174E-04	890.	8.161E-04	7.945E-04	890.	6.693E-03	6.500E-03

LASALLE SITE METEOROLOGICAL DATA 1/78 - 12/87

Table 4-6 (Page 6 of 15)

Maximum Offsite Finite Plume Gamma Dose Factors Based on 1 cm Depth at the Unrestricted Area Boundary for Kr-89

Downwind Direction	Unrestricted Area Bound (meters)	Elevated(Stack) Release Radius (meters)	S (mrad/yr)/(uCi/sec)	SBAR	Mixed Mode(Vent) Release Radius (meters)	V (mrad/yr)/(uCi/sec)	VBAR	Ground Level Release Radius (meters)	G (mrad/yr)/(uCi/sec)	GBAR
N	1036.	1036.	3.904E-04	3.794E-04	1036.	4.258E-04	4.139E-04	1036.	2.051E-03	1.992E-03
NNE	1378.	1378.	2.820E-04	2.741E-04	1378.	2.988E-04	2.904E-04	1378.	1.151E-03	1.118E-03
NE	2408.	2408.	8.306E-05	8.072E-05	2408.	7.403E-05	7.195E-05	2408.	2.060E-04	2.001E-04
ENE	4450.	4450.	1.570E-05	1.526E-05	4450.	1.153E-05	1.121E-05	4450.	1.701E-05	1.653E-05
E	1996.	1996.	1.052E-04	1.023E-04	1996.	9.299E-05	9.037E-05	1996.	3.031E-04	2.944E-04
ESE	1465.	1465.	2.365E-04	2.299E-04	1465.	2.240E-04	2.177E-04	1465.	7.762E-04	7.540E-04
SE	969.	969.	3.891E-04	3.782E-04	969.	4.188E-04	4.070E-04	969.	1.846E-03	1.793E-03
SSE	838.	838.	4.108E-04	3.993E-04	838.	4.365E-04	4.243E-04	838.	1.831E-03	1.778E-03
S	829.	829.	3.408E-04	3.312E-04	829.	3.253E-04	3.162E-04	829.	2.034E-03	1.976E-03
SSW	835.	835.	2.921E-04	2.839E-04	835.	2.779E-04	2.702E-04	835.	1.021E-03	9.916E-04
SW	628.	628.	5.830E-04	5.667E-04	628.	6.600E-04	6.415E-04	628.	3.274E-03	3.180E-03
WSW	533.	533.	6.913E-04	6.720E-04	533.	7.525E-04	7.314E-04	533.	4.592E-03	4.460E-03
W	524.	524.	6.961E-04	6.766E-04	524.	8.259E-04	8.028E-04	524.	5.967E-03	5.796E-03
WNW	643.	643.	4.295E-04	4.174E-04	643.	5.147E-04	5.003E-04	643.	3.746E-03	3.638E-03
NW	762.	762.	3.500E-04	3.402E-04	762.	4.035E-04	3.922E-04	762.	2.561E-03	2.488E-03
NNW	890.	890.	3.301E-04	3.208E-04	890.	3.415E-04	3.319E-04	890.	1.966E-03	1.909E-03

LASALLE SITE METEOROLOGICAL DATA 1/78 - 12/87

Table 4-6 (Page 7 of 15)

Maximum Offsite Finite Plume Gamma Dose Factors Based on 1 cm Depth at the Unrestricted Area Boundary for Kr-90

Downwind Direction	Unrestricted Area Bound (meters)	Elevated(Stack) Release Radius (meters)	S (mrad/yr)/(uCi/sec)	SBAR	Mixed Mode(Vent) Release Radius (meters)	V (mrad/yr)/(uCi/sec)	VBAR	Ground Level Release Radius (meters)	G (mrad/yr)/(uCi/sec)	GBAR
N	1036.	1036.	6.785E-05	6.586E-05	1036.	5.199E-05	5.047E-05	1036.	8.283E-05	7.954E-05
NNE	1378.	1378.	3.195E-05	3.102E-05	1378.	2.161E-05	2.098E-05	1378.	2.265E-05	2.194E-05
NE	2408.	2408.	2.160E-06	2.097E-06	2408.	9.136E-07	8.868E-07	2408.	5.870E-07	5.693E-07
ENE	4450.	4450.	1.109E-07	1.076E-07	4450.	3.907E-08	3.792E-08	4450.	1.814E-08	1.759E-08
E	1996.	1996.	4.713E-06	4.575E-06	1996.	2.562E-06	2.486E-06	1996.	2.865E-06	2.779E-06
ESE	1465.	1465.	2.134E-05	2.072E-05	1465.	1.551E-05	1.506E-05	1465.	2.503E-05	2.427E-05
SE	969.	969.	5.843E-05	5.673E-05	969.	5.324E-05	5.168E-05	969.	1.365E-04	1.324E-04
SSE	838.	838.	6.863E-05	6.663E-05	838.	6.174E-05	5.993E-05	838.	1.227E-04	1.190E-04
S	829.	829.	5.057E-05	4.909E-05	829.	3.745E-05	3.635E-05	829.	1.055E-04	1.023E-04
SSW	835.	835.	3.062E-05	2.972E-05	835.	1.274E-05	1.237E-05	835.	1.835E-05	1.779E-05
SW	628.	628.	9.754E-05	9.470E-05	628.	6.538E-05	6.347E-05	628.	1.410E-04	1.368E-04
WSW	533.	533.	1.892E-04	1.836E-04	533.	1.525E-04	1.480E-04	533.	4.861E-04	4.713E-04
W	524.	524.	2.165E-04	2.101E-04	524.	2.185E-04	2.121E-04	524.	8.427E-04	8.170E-04
WNW	643.	643.	1.018E-04	9.883E-05	643.	1.008E-04	9.787E-05	643.	3.141E-04	3.045E-04
NW	762.	762.	6.634E-05	6.440E-05	762.	5.815E-05	5.645E-05	762.	1.308E-04	1.267E-04
NNW	890.	890.	5.725E-05	5.558E-05	890.	4.336E-05	4.209E-05	890.	8.819E-05	8.551E-05

LASALLE SITE METEOROLOGICAL DATA 1/78 - 12/87

Table 4-6 (Page 8 of 15)

Maximum Offsite Finite Plume Gamma Dose Factors Based on 1 cm Depth at the Unrestricted Area Boundary for Xe-131m

Downwind Direction	Unrestricted Area Bound (meters)	Elevated(Stack) Release Radius (meters)	S (mrad/yr)/(uCi/sec)	SBAR	Mixed Mode(Vent) Release Radius (meters)	V (mrad/yr)/(uCi/sec)	VBAR	Ground Level Release Radius (meters)	G (mrad/yr)/(uCi/sec)	GBAR
N	1036.	1036.	1.604E-06	1.473E-06	1036.	1.827E-06	1.679E-06	1036.	1.645E-04	1.283E-04
NNE	1378.	1378.	1.778E-06	1.572E-06	1378.	1.726E-06	1.553E-06	1378.	1.072E-04	8.384E-05
NE	2408.	2408.	1.086E-06	9.376E-07	2408.	1.136E-06	9.826E-07	2408.	4.347E-05	3.412E-05
ENE	4450.	4450.	7.931E-07	6.617E-07	4450.	7.858E-07	6.550E-07	4450.	1.623E-05	1.279E-05
E	1996.	1996.	9.572E-07	8.457E-07	1996.	1.230E-06	1.058E-06	1996.	5.428E-05	4.253E-05
ESE	1465.	1465.	1.347E-06	1.215E-06	1465.	1.789E-06	1.560E-06	1465.	7.935E-05	6.215E-05
SE	969.	969.	1.472E-06	1.365E-06	969.	2.406E-06	2.115E-06	969.	1.240E-04	9.696E-05
SSE	838.	838.	1.415E-06	1.318E-06	838.	2.598E-06	2.260E-06	838.	1.228E-04	9.597E-05
S	829.	829.	1.231E-06	1.144E-06	829.	1.966E-06	1.727E-06	829.	1.232E-04	9.639E-05
SSW	835.	835.	1.196E-06	1.103E-06	835.	2.003E-06	1.755E-06	835.	8.798E-05	6.885E-05
SW	628.	628.	1.802E-06	1.691E-06	628.	4.345E-06	3.728E-06	628.	2.109E-04	1.646E-04
WSW	533.	533.	1.859E-06	1.755E-06	533.	4.161E-06	3.577E-06	533.	2.324E-04	1.813E-04
W	524.	524.	1.800E-06	1.703E-06	524.	3.359E-06	2.972E-06	524.	3.000E-04	2.335E-04
WNW	643.	643.	1.263E-06	1.194E-06	643.	1.976E-06	1.791E-06	643.	2.446E-04	1.902E-04
NW	762.	762.	1.135E-06	1.069E-06	762.	1.561E-06	1.437E-06	762.	2.005E-04	1.560E-04
NNW	890.	890.	1.191E-06	1.112E-06	890.	1.363E-06	1.263E-06	890.	1.664E-04	1.295E-04

LASALLE SITE METEOROLOGICAL DATA 1/78 - 12/87

Table 4-6 (Page 9 of 15)

Maximum Offsite Finite Plume Gamma Dose Factors Based on 1 cm Depth at the Unrestricted Area Boundary for Xe-133m

Downwind Direction	Unrestricted Area Bound (meters)	Elevated(Stack) Release Radius (meters)	S (mrad/yr)/(uCi/sec)	SBAR	Mixed Mode(Vent) Release Radius (meters)	V (mrad/yr)/(uCi/sec)	VBAR	Ground Level Release Radius (meters)	G (mrad/yr)/(uCi/sec)	GBAR
N	1036.	1036.	8.557E-06	8.199E-06	1036.	9.814E-06	9.407E-06	1036.	2.822E-04	2.410E-04
NNE	1378.	1378.	7.917E-06	7.509E-06	1378.	8.400E-06	8.009E-06	1378.	1.901E-04	1.633E-04
NE	2408.	2408.	4.246E-06	3.993E-06	2408.	4.482E-06	4.217E-06	2408.	8.032E-05	6.950E-05
ENE	4450.	4450.	2.488E-06	2.298E-06	4450.	2.650E-06	2.262E-06	4450.	3.108E-05	2.706E-05
E	1996.	1996.	4.247E-06	4.028E-06	1996.	4.721E-06	4.433E-06	1996.	9.835E-05	8.482E-05
ESE	1465.	1465.	6.614E-06	6.309E-06	1465.	7.393E-06	6.978E-06	1465.	1.432E-04	1.234E-04
SE	969.	969.	8.229E-06	7.903E-06	969.	1.039E-05	9.834E-06	969.	2.189E-04	1.879E-04
SSE	838.	838.	8.070E-06	7.758E-06	838.	1.060E-05	9.998E-06	838.	2.163E-04	1.856E-04
S	829.	829.	6.932E-06	6.660E-06	829.	8.449E-06	7.995E-06	829.	2.201E-04	1.893E-04
SSW	835.	835.	6.541E-06	6.276E-06	835.	8.500E-06	8.036E-06	835.	1.574E-04	1.354E-04
SW	628.	628.	1.059E-05	1.020E-05	628.	1.637E-05	1.535E-05	628.	3.668E-04	3.140E-04
WSW	533.	533.	1.121E-05	1.081E-05	533.	1.588E-05	1.490E-05	533.	4.005E-04	3.423E-04
W	524.	524.	1.096E-05	1.056E-05	524.	1.504E-05	1.427E-05	524.	5.039E-04	4.287E-04
WNW	643.	643.	7.640E-06	7.374E-06	643.	9.956E-06	9.510E-06	643.	4.055E-04	3.441E-04
NW	762.	762.	6.774E-06	6.526E-06	762.	8.435E-06	8.088E-06	762.	3.334E-04	2.831E-04
NNW	890.	890.	6.855E-06	6.594E-06	890.	7.588E-06	7.286E-06	890.	2.794E-04	2.377E-04

LASALLE SITE METEOROLOGICAL DATA 1/78 - 12/87

Table 4-6 (Page 10 of 15)

Maximum Offsite Finite Plume Gamma Dose Factors Based on 1 cm Depth at the Unrestricted Area Boundary for Xe-133

Downwind Direction	Unrestricted Area Bound (meters)	Elevated(Stack) Release Radius (meters)	S (mrad/yr)/(uCi/sec)	SBAR	Mixed Mode(Vent) Release Radius (meters)	V (mrad/yr)/(uCi/sec)	VBAR	Ground Level Release Radius (meters)	G (mrad/yr)/(uCi/sec)	GBAR
N	1036.	1036.	7.010E-06	6.757E-06	1036.	7.933E-06	7.649E-06	1036.	3.136E-04	2.785E-04
NNE	1378.	1378.	6.939E-06	6.629E-06	1378.	7.149E-06	6.860E-06	1378.	2.132E-04	1.903E-04
NE	2408.	2408.	3.969E-06	3.767E-06	2408.	4.106E-06	3.897E-06	2408.	9.094E-05	8.164E-05
ENE	4450.	4450.	2.442E-06	2.286E-06	4450.	2.384E-06	2.229E-06	4450.	3.540E-05	3.193E-05
E	1996.	1996.	3.841E-06	3.671E-06	1996.	4.310E-06	4.035E-06	1996.	1.109E-04	9.929E-05
ESE	1465.	1465.	5.762E-06	5.534E-06	1465.	6.599E-06	6.277E-06	1465.	1.612E-04	1.443E-04
SE	969.	969.	6.641E-06	6.416E-06	969.	8.978E-06	8.558E-06	969.	2.450E-04	2.185E-04
SSE	838.	838.	6.364E-06	6.153E-06	838.	9.231E-06	8.769E-06	838.	2.418E-04	2.156E-04
S	829.	829.	5.333E-06	5.152E-06	829.	6.962E-06	6.627E-06	829.	2.476E-04	2.212E-04
SSW	835.	835.	4.969E-06	4.793E-06	835.	6.598E-06	6.266E-06	835.	1.770E-04	1.582E-04
SW	628.	628.	7.798E-06	7.549E-06	628.	1.362E-05	1.285E-05	628.	4.090E-04	3.640E-04
WSW	533.	533.	8.245E-06	7.992E-06	533.	1.326E-05	1.252E-05	533.	4.447E-04	3.951E-04
W	524.	524.	8.166E-06	7.919E-06	524.	1.220E-05	1.164E-05	524.	5.551E-04	4.911E-04
WNW	643.	643.	5.715E-06	5.541E-06	643.	7.885E-06	7.574E-06	643.	4.444E-04	3.922E-04
NW	762.	762.	5.117E-06	4.958E-06	762.	6.538E-06	6.303E-06	762.	3.461E-04	3.233E-04
NNW	890.	890.	5.340E-06	5.165E-06	890.	5.911E-06	5.708E-06	890.	3.080E-04	2.725E-04

LASALLE SITE METEOROLOGICAL DATA 1/78 - 12/87

Table 4-6 (Page 11 of 15)

Maximum Offsite Finite Plume Gamma Dose Factors Based on 1 cm Depth at the Unrestricted Area Boundary for Xe-135m

Downwind Direction	Unrestricted Area Bound (meters)	Elevated(Stack) Release Radius (meters)	S (mrad/yr)/(uCi/sec)	SBAR	Mixed Mode(Vent) Release Radius (meters)	V (mrad/yr)/(uCi/sec)	VBAR	Ground Level Release Radius (meters)	G (mrad/yr)/(uCi/sec)	GBAR
N	1036.	1036.	1.396E-04	1.349E-04	1036.	1.598E-04	1.545E-04	1036.	1.531E-03	1.475E-03
NNE	1378.	1378.	1.151E-04	1.113E-04	1378.	1.274E-04	1.232E-04	1378.	1.819E-03	9.821E-04
NE	2408.	2408.	5.077E-05	4.907E-05	2408.	5.129E-05	4.958E-05	2408.	3.516E-04	3.390E-04
ENE	4450.	4450.	1.919E-05	1.854E-05	4450.	1.778E-05	1.718E-05	4450.	8.758E-05	8.445E-05
E	1996.	1996.	5.672E-05	5.483E-05	1996.	5.675E-05	5.486E-05	1996.	4.329E-04	4.172E-04
ESE	1465.	1465.	1.005E-04	9.716E-05	1465.	1.024E-04	9.902E-05	1465.	7.369E-04	7.103E-04
SE	969.	969.	1.389E-04	1.343E-04	969.	1.575E-04	1.522E-04	969.	1.262E-03	1.216E-03
SSE	838.	838.	1.402E-04	1.356E-04	838.	1.591E-04	1.538E-04	838.	1.254E-03	1.209E-03
S	829.	829.	1.183E-04	1.144E-04	829.	1.235E-04	1.194E-04	829.	1.341E-03	1.292E-03
SSW	835.	835.	1.104E-04	1.068E-04	835.	1.260E-04	1.218E-04	835.	8.762E-04	8.444E-04
SW	628.	628.	1.904E-04	1.841E-04	628.	2.444E-04	2.363E-04	628.	2.173E-03	2.094E-03
WSW	533.	533.	2.063E-04	1.995E-04	533.	2.427E-04	2.345E-04	533.	2.479E-03	2.388E-03
W	524.	524.	2.033E-04	1.964E-04	524.	2.511E-04	2.427E-04	524.	3.050E-03	2.937E-03
WNW	643.	643.	1.363E-04	1.318E-04	643.	1.687E-04	1.631E-04	643.	2.286E-03	2.201E-03
NW	762.	762.	1.187E-04	1.148E-04	762.	1.423E-04	1.376E-04	762.	1.806E-03	1.739E-03
NNW	890.	890.	1.161E-04	1.122E-04	890.	1.259E-04	1.217E-04	890.	1.482E-03	1.427E-03

LASALLE SITE METEOROLOGICAL DATA 1/78 - 12/87

Table 4-6 (Page 12 of 15)

Maximum Offsite Finite Plume Gamma Dose Factors Based on 1 cm Depth at the Unrestricted Area Boundary for Xe-135

Downwind Direction	Unrestricted Area Bound (meters)	Elevated(Stack) Release Radius (meters)	S (mrad/yr)/(uCi/sec)	SBAR	Mixed Mode(Vent) Release Radius (meters)	V (mrad/yr)/(uCi/sec)	VBAR	Ground Level Release Radius (meters)	G (mrad/yr)/(uCi/sec)	GBAR
N	1036.	1036.	8.165E-05	7.902E-05	1036.	9.387E-05	9.085E-05	1036.	1.302E-03	1.257E-03
NNE	1378.	1378.	7.171E-05	6.940E-05	1378.	7.821E-05	7.569E-05	1378.	9.178E-04	8.866E-04
NE	2408.	2408.	3.669E-05	3.550E-05	2408.	3.876E-05	3.751E-05	2408.	4.075E-04	3.937E-04
ENE	4450.	4450.	1.928E-05	1.866E-05	4450.	1.899E-05	1.837E-05	4450.	1.625E-04	1.570E-04
E	1996.	1996.	3.838E-05	3.714E-05	1996.	4.056E-05	3.925E-05	1996.	4.869E-04	4.704E-04
ESE	1465.	1465.	6.171E-05	5.972E-05	1465.	6.539E-05	6.328E-05	1465.	7.873E-04	6.833E-04
SE	969.	969.	7.953E-05	7.697E-05	969.	9.346E-05	9.044E-05	969.	1.052E-03	1.017E-03
SSE	838.	838.	7.845E-05	7.593E-05	838.	9.367E-05	9.064E-05	838.	1.037E-03	1.002E-03
S	829.	829.	6.719E-05	6.503E-05	829.	7.587E-05	7.342E-05	829.	1.078E-03	1.041E-03
SSW	835.	835.	6.306E-05	6.103E-05	835.	7.636E-05	7.389E-05	835.	7.699E-04	7.438E-04
SW	628.	628.	1.039E-04	1.006E-04	628.	1.409E-04	1.363E-04	628.	1.729E-03	1.670E-03
WSW	533.	533.	1.106E-04	1.071E-04	533.	1.372E-04	1.328E-04	533.	1.864E-03	1.801E-03
W	524.	524.	1.082E-04	1.048E-04	524.	1.374E-04	1.329E-04	524.	2.256E-03	2.179E-03
WNW	643.	643.	7.538E-05	7.296E-05	643.	9.395E-05	9.092E-05	643.	1.775E-03	1.713E-03
NW	762.	762.	6.654E-05	6.440E-05	762.	8.098E-05	7.838E-05	762.	1.466E-03	1.415E-03
NNW	890.	890.	6.671E-05	6.456E-05	890.	7.327E-05	7.092E-05	890.	1.247E-03	1.204E-03

LASALLE SITE METEOROLOGICAL DATA 1/78 - 12/87

Table 4-6 (Page 13 of 15)

Maximum Offsite Finite Plume Gamma Dose Factors Based on 1 cm Depth at the Unrestricted Area Boundary for Xe-137

Downwind Direction	Unrestricted Area Bound (meters)	Elevated(Stack) Release Radius (meters)	S (mrad/yr)/(uCi/sec)	GEAR	Mixed Mode(Vent) Release Radius (meters)	V (mrad/yr)/(uCi/sec)	VEAR	Ground Level Release Radius (meters)	G (mrad/yr)/(uCi/sec)	GEAR
N	1036.	1036.	4.780E-05	4.627E-05	1036.	5.242E-05	5.074E-05	1036.	3.409E-04	3.298E-04
NNE	1378.	1378.	3.585E-05	3.471E-05	1378.	3.814E-05	3.692E-05	1378.	1.975E-04	1.911E-04
NE	2408.	2408.	1.153E-05	1.116E-05	2408.	1.052E-05	1.018E-05	2408.	3.979E-05	3.850E-05
ENE	4450.	4450.	2.512E-06	2.432E-06	4450.	1.933E-06	1.871E-06	4450.	3.949E-06	3.821E-06
E	1996.	1996.	1.420E-05	1.374E-05	1996.	1.285E-05	1.244E-05	1996.	5.599E-05	5.418E-05
ESE	1465.	1465.	3.033E-05	2.936E-05	1465.	2.918E-05	2.825E-05	1465.	1.327E-04	1.284E-04
SE	969.	969.	4.743E-05	4.591E-05	969.	5.188E-05	5.023E-05	969.	2.989E-04	2.892E-04
SSE	838.	838.	4.926E-05	4.769E-05	838.	5.357E-05	5.186E-05	838.	2.970E-04	2.874E-04
S	829.	829.	4.072E-05	3.942E-05	829.	3.975E-05	3.849E-05	829.	3.298E-04	3.191E-04
SSW	835.	835.	3.521E-05	3.408E-05	835.	3.424E-05	3.315E-05	835.	1.748E-04	1.691E-04
SW	628.	628.	6.779E-05	6.563E-05	628.	7.938E-05	7.685E-05	628.	5.333E-04	5.161E-04
WSW	533.	533.	7.919E-05	7.667E-05	533.	8.829E-05	8.548E-05	533.	7.164E-04	6.932E-04
W	524.	524.	7.990E-05	7.736E-05	524.	9.608E-05	9.302E-05	524.	9.223E-04	8.924E-04
WNW	643.	643.	5.023E-05	4.863E-05	643.	6.090E-05	5.896E-05	643.	6.002E-04	5.808E-04
NW	762.	762.	4.160E-05	4.028E-05	762.	4.841E-05	4.687E-05	762.	4.228E-04	4.090E-04
NNW	890.	890.	3.985E-05	3.858E-05	890.	4.152E-05	4.020E-05	890.	3.279E-04	3.172E-04

LASALLE SITE METEOROLOGICAL DATA 1/78 - 12/87

Table 4-6 (Page 14 of 15)

Maximum Offsite Finite Plume Gamma Dose Factors Based on 1 cm Depth at the Unrestricted Area Boundary for Xe-138

Downwind Direction	Unrestricted Area Bound (meters)	Elevated(Stack) Release Radius (meters)	G (mrad/yr)/(uCi/sec)	SBAR	Mixed Mode(Vent) Release Radius (meters)	V (mrad/yr)/(uCi/sec)	VBAR	Ground Level Release Radius (meters)	G (mrad/yr)/(uCi/sec)	GBAR
N	1036.	1036.	3.926E-04	3.816E-04	1036.	4.523E-04	4.396E-04	1036.	3.178E-03	3.084E-03
NNE	1378.	1378.	3.160E-04	3.071E-04	1378.	3.536E-04	3.437E-04	1378.	2.117E-03	2.055E-03
NE	2408.	2408.	1.356E-04	1.318E-04	2408.	1.379E-04	1.340E-04	2408.	7.244E-04	7.032E-04
ENE	4450.	4450.	4.939E-05	4.799E-05	4450.	4.572E-05	4.443E-05	4450.	1.769E-04	1.718E-04
E	1996.	1996.	1.540E-04	1.497E-04	1996.	1.535E-04	1.492E-04	1996.	8.921E-04	8.659E-04
ESE	1465.	1465.	2.766E-04	2.689E-04	1465.	2.804E-04	2.725E-04	1465.	1.532E-03	1.487E-03
SE	969.	969.	3.938E-04	3.828E-04	969.	4.408E-04	4.285E-04	969.	2.641E-03	2.564E-03
SSE	838.	838.	4.037E-04	3.924E-04	838.	4.484E-04	4.358E-04	838.	2.628E-03	2.551E-03
S	829.	829.	3.457E-04	3.360E-04	829.	3.560E-04	3.460E-04	829.	2.809E-03	2.727E-03
SSW	835.	835.	3.277E-04	3.186E-04	835.	3.832E-04	3.724E-04	835.	1.828E-03	1.774E-03
SW	628.	628.	5.698E-04	5.538E-04	628.	7.209E-04	7.007E-04	628.	4.546E-03	4.412E-03
WSW	533.	533.	6.144E-04	5.973E-04	533.	7.121E-04	6.921E-04	533.	5.206E-03	5.053E-03
W	524.	524.	5.976E-04	5.809E-04	524.	7.318E-04	7.113E-04	524.	6.383E-03	6.195E-03
WNW	643.	643.	3.986E-04	3.875E-04	643.	4.887E-04	4.750E-04	643.	4.757E-03	4.616E-03
NW	762.	762.	3.457E-04	3.360E-04	762.	4.131E-04	4.016E-04	762.	3.746E-03	3.635E-03
NNW	890.	890.	3.330E-04	3.236E-04	890.	3.626E-04	3.525E-04	890.	3.069E-03	2.978E-03

LASALLE SITE METEOROLOGICAL DATA 1/78 - 12/87

Table 4-6 (Page 15 of 15)

Maximum Offsite Finite Plume Gamma Dose Factors Based on 1 cm Depth at the Unrestricted Area Boundary for Ar-41

Downwind Direction	Unrestricted Area Bound (meters)	Elevated(Stack) Release Radius (meters)	S (mrad/yr)/(uCi/sec)	SBAR	Mixed Mode(Vent) Release Radius (meters)	V (mrad/yr)/(uCi/sec)	VBAR	Ground Level Release Radius (meters)	G (mrad/yr)/(uCi/sec)	GBAR
N	1036.	1036.	4.746E-04	4.594E-04	1036.	5.528E-04	5.351E-04	1036.	4.557E-03	4.411E-03
NNE	1378.	1378.	3.954E-04	3.828E-04	1378.	4.439E-04	4.297E-04	1378.	3.203E-03	3.101E-03
NE	2408.	2408.	1.925E-04	1.863E-04	2408.	2.045E-04	1.980E-04	2408.	1.387E-03	1.343E-03
ENE	4450.	4450.	9.141E-05	8.848E-05	4450.	9.061E-05	8.772E-05	4450.	5.219E-04	5.052E-04
E	1996.	1996.	2.110E-04	2.043E-04	1996.	2.180E-04	2.110E-04	1996.	1.658E-03	1.605E-03
ESE	1465.	1465.	3.480E-04	3.368E-04	1465.	3.593E-04	3.478E-04	1465.	2.459E-03	2.381E-03
SE	969.	969.	4.711E-04	4.560E-04	969.	5.320E-04	5.149E-04	969.	3.715E-03	3.597E-03
SSE	838.	838.	4.761E-04	4.608E-04	838.	5.378E-04	5.206E-04	838.	3.671E-03	3.554E-03
S	829.	829.	4.168E-04	4.035E-04	829.	4.533E-04	4.388E-04	829.	3.823E-03	3.701E-03
SSW	835.	835.	3.994E-04	3.866E-04	835.	4.930E-04	4.772E-04	835.	2.700E-03	2.614E-03
SW	628.	628.	6.711E-04	6.496E-04	628.	8.591E-04	8.316E-04	628.	6.139E-03	5.943E-03
WSW	533.	533.	7.089E-04	6.862E-04	533.	8.229E-04	7.966E-04	533.	6.667E-03	6.453E-03
W	524.	524.	6.802E-04	6.584E-04	524.	8.291E-04	8.026E-04	524.	8.057E-03	7.799E-03
WNW	643.	643.	4.708E-04	4.558E-04	643.	5.716E-04	5.533E-04	643.	6.300E-03	6.099E-03
NW	762.	762.	4.123E-04	3.991E-04	762.	4.979E-04	4.811E-04	762.	5.173E-03	5.008E-03
NNW	890.	890.	4.025E-04	3.896E-04	890.	4.447E-04	4.305E-04	890.	4.374E-03	4.234E-03

LASALLE SITE METEOROLOGICAL DATA 1/78 - 12/87

Table 4-7 (Page 1 of 15)

Maximum Offsite Finite Plume Gamma Dose Factors Based on 1 cm Depth at the Restricted Area Boundary for Kr-83m

Downwind Direction	Restricted Area Bound (meters)	Elevated(Stack) Release Radius (meters)	S (mrad/yr)/(uCi/sec)	SBAR	Mixed Mode(Vent) Release Radius (meters)	V (mrad/yr)/(uCi/sec)	VBAR	Ground Level Release Radius (meters)	G (mrad/yr)/(uCi/sec)	GBAR
N	1036.	1036.	4.787E-07	3.609E-07	1036.	5.281E-07	3.982E-07	1036.	1.785E-04	1.346E-04
NNE	1378.	1378.	8.751E-07	6.599E-07	1378.	6.905E-07	5.206E-07	1378.	1.139E-04	8.586E-05
NE	1609.	1609.	6.873E-07	5.182E-07	1609.	7.291E-07	5.497E-07	1609.	8.106E-05	6.112E-05
ENE	1079.	1079.	4.160E-07	3.137E-07	1079.	8.010E-07	6.039E-07	1079.	1.322E-04	9.967E-05
E	1055.	1055.	3.476E-07	2.621E-07	1055.	9.181E-07	6.923E-07	1055.	1.483E-04	1.118E-04
ESE	1055.	1055.	4.371E-07	3.294E-07	1055.	1.175E-06	8.856E-07	1055.	1.394E-04	1.051E-04
SE	969.	969.	3.545E-07	2.673E-07	969.	1.267E-06	9.554E-07	969.	1.333E-04	1.005E-04
SSE	698.	698.	2.415E-07	1.821E-07	698.	1.646E-06	1.241E-06	698.	1.773E-04	1.337E-04
S	820.	820.	2.803E-07	2.114E-07	820.	1.047E-06	7.895E-07	820.	1.354E-04	1.021E-04
SSW	835.	835.	3.185E-07	2.401E-07	835.	1.071E-06	8.076E-07	835.	9.326E-05	7.032E-05
SW	628.	628.	3.177E-07	2.395E-07	628.	2.826E-06	2.131E-06	628.	2.305E-04	1.738E-04
WSW	533.	533.	2.617E-07	1.973E-07	533.	2.674E-06	2.017E-06	533.	2.568E-04	1.936E-04
W	524.	524.	2.327E-07	1.754E-07	524.	1.658E-06	1.250E-06	524.	3.352E-04	2.527E-04
WNW	643.	643.	1.714E-07	1.292E-07	643.	7.235E-07	5.455E-07	643.	2.728E-04	2.057E-04
NW	762.	762.	1.744E-07	1.315E-07	762.	4.391E-07	3.311E-07	762.	2.219E-04	1.673E-04
NNW	890.	890.	2.397E-07	1.807E-07	890.	3.334E-07	2.514E-07	890.	1.823E-04	1.374E-04

LASALLE SITE METEOROLOGICAL DATA 1/78 - 12/87

The restricted area boundary (RAB) was redefined in sectors E and ESE to 833 and 848 from 1055 and 1055 meters, respectively. As a result of this change of range, the dose factors were re-evaluated using the following equation. Here, F_n is the resulting dose factor at the new range (i.e. 833). F_{Ro} is the value provided in the above ODCM tables (i.e. S, SBAR, V, VBAR, G, GBAR). R_o is the former RAB distance (i.e. 1055), and R is the RAB distance (i.e. 833)

$$F_R = F_{R_o}\left[\frac{R_o}{R}\right]\exp 1.5$$

This analysis indicates that the change in range would increase the dose factor error by approximately 40%. Since this difference is well within the expected error of the current factors, no further adjustment in the above factors is considered necessary.

Based on Sargent & Lundy, Analysis and Technology Division, LaSalle calculation no. ATD-0164, revisions 0, 1, 2, and 3.

Table 4-7 (Page 2 of 15)

Maximum Offsite Finite Plume Gamma Dose Factors Based on 1 cm Depth at the Restricted Area Boundary for Kr-85m

Downwind Direction	Restricted Area Bound (meters)	Elevated(Stack) Release Radius (meters)	S (mrad/yr)/(uCi/sec)	SBAR	Mixed Mode(Vent) Release Radius (meters)	V (mrad/yr)/(uCi/sec)	VBAR	Ground Level Release Radius (meters)	G (mrad/yr)/(uCi/sec)	GBAR
N	1036.	1036.	5.747E-05	5.560E-05	1036.	6.602E-05	6.388E-05	1036.	9.660E-04	9.252E-04
NNE	1378.	1378.	5.063E-05	4.896E-05	1378.	5.514E-05	5.334E-05	1378.	6.776E-04	6.496E-04
NE	1609.	1609.	3.632E-05	3.512E-05	1609.	3.847E-05	3.720E-05	1609.	5.003E-04	4.798E-04
ENE	1079.	1079.	4.315E-05	4.174E-05	1079.	4.569E-05	4.419E-05	1079.	7.345E-04	7.037E-04
E	1055.	1055.	4.572E-05	4.424E-05	1055.	5.053E-05	4.886E-05	1055.	8.134E-04	7.792E-04
ESE	1055.	1055.	5.730E-05	5.544E-05	1055.	6.298E-05	6.090E-05	1055.	8.020E-04	7.687E-04
SE	969.	969.	5.596E-05	5.415E-05	969.	6.610E-05	6.391E-05	969.	7.793E-04	7.470E-04
SSE	698.	698.	6.471E-05	6.263E-05	698.	7.905E-05	7.643E-05	698.	9.815E-04	9.404E-04
S	820.	820.	4.756E-05	4.603E-05	820.	5.386E-05	5.208E-05	820.	8.103E-04	7.769E-04
SSW	835.	835.	4.422E-05	4.279E-05	835.	5.351E-05	5.174E-05	835.	5.684E-04	5.450E-04
SW	628.	628.	7.281E-05	7.046E-05	628.	9.952E-05	9.618E-05	628.	1.285E-03	1.231E-03
WSW	533.	533.	7.757E-05	7.507E-05	533.	9.714E-05	9.388E-05	533.	1.389E-03	1.331E-03
W	524.	524.	7.601E-05	7.356E-05	524.	9.705E-05	9.385E-05	524.	1.687E-03	1.614E-03
WNW	643.	643.	5.286E-05	5.116E-05	643.	6.615E-05	6.399E-05	643.	1.327E-03	1.270E-03
NW	762.	762.	4.668E-05	4.518E-05	762.	5.688E-05	5.503E-05	762.	1.094E-03	1.047E-03
NNW	890.	890.	4.683E-05	4.532E-05	890.	5.142E-05	4.978E-05	890.	9.282E-04	8.885E-04

LASALLE SITE METEOROLOGICAL DATA 1/70 - 12/87

The restricted area boundary (RAB) was redefined in sectors E and ESE to 833 and 848 from 1055 and 1055 meters, respectively. As a result of this change of range, the dose factors were re-evaluated using the following equation. Here, F_n is the resulting dose factor at the new range (i.e. 833). F_{Ro} is the value provided in the above ODCM tables (i.e. S, SBAR, V, VBAR, G, GBAR). R_o is the former RAB distance (i.e. 1055), and R is the RAB distance (i.e. 833)

$$F_R = F_{R_o}\left[\frac{R_o}{R}\right]\exp 1.5$$

This analysis indicates that the change in range would increase the dose factor error by approximately 40%. Since this difference is well within the expected error of the current factors, no further adjustment in the above factors is considered necessary.

Table 4-7 (Page 3 of 15)

Maximum Offsite Finite Plume Gamma Dose Factors Based on 1 cm Depth at the Restricted Area Boundary for Kr-85

Downwind Direction	Restricted Area Bound (meters)	Elevated(Stack) Release Radius (meters)	S (mrad/yr)/(uCi/sec)	SBAR	Mixed Mode(Vent) Release Radius (meters)	V (mrad/yr)/(uCi/sec)	VBAR	Ground Level Release Radius (meters)	G (mrad/yr)/(uCi/sec)	GBAR
N	1036.	1036.	8.547E-07	8.265E-07	1036.	9.889E-07	9.563E-07	1036.	1.056E-05	1.021E-05
NNE	1378.	1378.	7.309E-07	7.068E-07	1378.	8.077E-07	7.811E-07	1378.	7.474E-06	7.227E-06
NE	1609.	1609.	5.225E-07	5.052E-07	1609.	5.615E-07	5.430E-07	1609.	5.559E-06	5.375E-06
ENE	1079.	1079.	6.463E-07	6.249E-07	1079.	6.707E-07	6.486E-07	1079.	8.057E-06	7.791E-06
E	1055.	1055.	6.819E-07	6.594E-07	1055.	7.385E-07	7.142E-07	1055.	8.923E-06	8.628E-06
ESE	1055.	1055.	8.484E-07	8.204E-07	1055.	9.108E-07	8.808E-07	1055.	8.808E-06	8.517E-06
SE	969.	969.	8.386E-07	8.110E-07	969.	9.583E-07	9.267E-07	969.	8.555E-06	8.273E-06
SSE	698.	698.	9.869E-07	9.543E-07	698.	1.153E-06	1.115E-06	698.	1.072E-05	1.036E-05
S	820.	820.	7.333E-07	7.091E-07	820.	8.154E-07	7.885E-07	820.	8.866E-06	8.574E-06
SSW	835.	835.	6.857E-07	6.630E-07	835.	8.402E-07	8.124E-07	835.	6.270E-06	6.063E-06
SW	628.	628.	1.142E-06	1.104E-06	628.	1.494E-06	1.444E-06	628.	1.401E-05	1.355E-05
WSW	533.	533.	1.211E-06	1.171E-06	533.	1.433E-06	1.386E-06	533.	1.510E-05	1.460E-05
W	524.	524.	1.172E-06	1.134E-06	524.	1.443E-06	1.395E-06	524.	1.824E-05	1.763E-05
WNW	643.	643.	8.185E-07	7.915E-07	643.	1.000E-06	9.670E-07	643.	1.436E-05	1.389E-05
NW	762.	762.	7.192E-07	6.954E-07	762.	8.694E-07	8.407E-07	762.	1.188E-05	1.148E-05
NNW	890.	890.	7.120E-07	6.893E-07	890.	7.849E-07	7.590E-07	890.	1.011E-05	9.778E-06

LASALLE SITE METEOROLOGICAL DATA 1/78 - 12/87

The restricted area boundary (RAB) was redefined in sectors E and ESE to 833 and 848 from 1055 and 1055 meters, respectively. As a result of this change of range, the dose factors were re-evaluated using the following equation. Here, F_n is the resulting dose factor at the new range (i.e. 833). F_{Ro} is the value provided in the above ODCM tables (i.e. S, SBAR, V, VBAR, G, GBAR). R_o is the former RAB distance (i.e. 1055), and R is the RAB distance (i.e. 833)

$$F_R = F_{R_o}\left[\frac{R_o}{R}\right]\exp 1.5$$

This analysis indicates that the change in range would increase the dose factor error by approximately 40%. Since this difference is well within the expected error of the current factors, no further adjustment in the above factors is considered necessary.

Table 4-7 (Page 4 of 15)

Maximum Offsite Finite Plume Gamma Dose Factors Based on 1 cm Depth at the Restricted Area Boundary for Kr-87

Downwind Direction	Restricted Area Bound (meters)	Elevated(Stack) Release Radius (meters)	S (mrad/yr)/(uCi/sec)	SBAR	Mixed Mode(Vent) Release Radius (meters)	V (mrad/yr)/(uCi/sec)	VBAR	Ground Level Release Radius (meters)	G (mrad/yr)/(uCi/sec)	GBAR
N	1036.	1036.	3.226E-04	3.135E-04	1036.	3.758E-04	3.652E-04	1036.	2.879E-03	2.795E-03
NNE	1378.	1378.	2.672E-04	2.597E-04	1378.	3.005E-04	2.920E-04	1378.	2.019E-03	1.960E-03
NE	1609.	1609.	1.908E-04	1.853E-04	1609.	2.038E-04	1.981E-04	1609.	1.480E-03	1.437E-03
ENE	1079.	1079.	2.430E-04	2.361E-04	1079.	2.534E-04	2.462E-04	1079.	2.192E-03	2.129E-03
E	1055.	1055.	2.601E-04	2.528E-04	1055.	2.785E-04	2.706E-04	1055.	2.423E-03	2.353E-03
ESE	1055.	1055.	3.217E-04	3.125E-04	1055.	3.412E-04	3.315E-04	1055.	2.407E-03	2.337E-03
SE	969.	969.	3.211E-04	3.120E-04	969.	3.612E-04	3.510E-04	969.	2.355E-03	2.287E-03
SSE	698.	698.	3.885E-04	3.776E-04	698.	4.423E-04	4.298E-04	698.	2.985E-03	2.898E-03
S	820.	820.	2.881E-04	2.800E-04	820.	3.117E-04	3.029E-04	820.	2.467E-03	2.396E-03
SSW	835.	835.	2.742E-04	2.665E-04	835.	3.400E-04	3.305E-04	835.	1.706E-03	1.657E-03
SW	628.	628.	4.614E-04	4.484E-04	628.	5.936E-04	5.769E-04	628.	3.903E-03	3.790E-03
WSW	533.	533.	4.880E-04	4.743E-04	533.	5.683E-04	5.523E-04	533.	4.251E-03	4.128E-03
W	524.	524.	4.675E-04	4.543E-04	524.	5.708E-04	5.547E-04	524.	5.136E-03	4.986E-03
WNW	643.	643.	3.224E-04	3.133E-04	643.	3.914E-04	3.804E-04	643.	4.001E-03	3.884E-03
NW	762.	762.	2.823E-04	2.743E-04	762.	3.397E-04	3.301E-04	762.	3.276E-03	3.180E-03
NNW	890.	890.	2.747E-04	2.669E-04	890.	3.031E-04	2.945E-04	890.	2.763E-03	2.683E-03

LASALLE SITE METEOROLOGICAL DATA 1/78 - 12/87

The restricted area boundary (RAB) was redefined in sectors E and ESE to 833 and 848 from 1055 and 1055 meters, respectively. As a result of this change of range, the dose factors were re-evaluated using the following equation. Here, F_n is the resulting dose factor at the new range (i.e. 833). F_{Ro} is the value provided in the above ODCM tables (i.e. S, SBAR, V, VBAR, G, GBAR). R_o is the former RAB distance (i.e. 1055), and R is the RAB distance (i.e. 833)

$$F_R = F_{R_o}\left[\frac{R_o}{R}\right]\exp 1.5$$

This analysis indicates that the change in range would increase the dose factor error by approximately 40%. Since this difference is well within the expected error of the current factors, no further adjustment in the above factors is considered necessary.

Table 4-7 (Page 5 of 15)

Maximum Offsite Finite Plume Gamma Dose Factors Based on 1 cm Depth at the Restricted Area Boundary for Kr-88

Downwind Direction	Restricted Area Bound (meters)	Elevated(Stack) Release Radius (meters)	S (mrad/yr)/(uCi/sec)	SBAR	Mixed Mode(Vent) Release Radius (meters)	V (mrad/yr)/(uCi/sec)	VBAR	Ground Level Release Radius (meters)	G (mrad/yr)/(uCi/sec)	GBAR
N	1036.	1036.	8.602E-04	8.374E-04	1036.	1.003E-03	9.769E-04	1036.	6.988E-03	6.787E-03
NNE	1378.	1378.	7.111E-04	6.922E-04	1378.	7.989E-04	7.777E-04	1378.	4.940E-03	4.798E-03
NE	1609.	1609.	5.067E-04	4.932E-04	1609.	5.485E-04	5.340E-04	1609.	3.656E-03	3.552E-03
ENE	1079.	1079.	6.528E-04	6.355E-04	1079.	6.769E-04	6.589E-04	1079.	5.337E-03	5.184E-03
E	1055.	1055.	6.915E-04	6.732E-04	1055.	7.419E-04	7.222E-04	1055.	5.907E-03	5.737E-03
ESE	1055.	1055.	8.514E-04	8.288E-04	1055.	9.030E-04	8.790E-04	1055.	5.857E-03	5.689E-03
SE	969.	969.	8.537E-04	8.311E-04	969.	9.571E-04	9.317E-04	969.	5.712E-03	5.549E-03
SSE	698.	698.	1.034E-03	1.007E-03	698.	1.172E-03	1.141E-03	698.	7.193E-03	6.986E-03
S	820.	820.	7.777E-04	7.571E-04	820.	8.513E-04	8.287E-04	820.	5.947E-03	5.777E-03
SSW	835.	835.	7.427E-04	7.231E-04	835.	9.375E-04	9.127E-04	835.	4.167E-03	4.048E-03
SW	628.	628.	1.246E-03	1.213E-03	628.	1.601E-03	1.559E-03	628.	9.396E-03	9.126E-03
WSW	533.	533.	1.314E-03	1.279E-03	533.	1.525E-03	1.485E-03	533.	1.017E-02	9.882E-03
W	524.	524.	1.249E-03	1.216E-03	524.	1.520E-03	1.480E-03	524.	1.225E-02	1.190E-02
WNW	643.	643.	8.669E-04	8.440E-04	643.	1.045E-03	1.017E-03	643.	9.595E-03	9.317E-03
NW	762.	762.	7.580E-04	7.379E-04	762.	9.125E-04	8.884E-04	762.	7.895E-03	7.666E-03
NNW	890.	890.	7.369E-04	7.174E-04	890.	8.161E-04	7.945E-04	890.	6.693E-03	6.500E-03

LASALLE SITE METEOROLOGICAL DATA 1/78 - 12/87

The restricted area boundary (RAB) was redefined in sectors E and ESE to 833 and 848 from 1055 and 1055 meters, respectively. As a result of this change of range, the dose factors were re-evaluated using the following equation. Here, F_n is the resulting dose factor at the new range (i.e. 833). F_{Ro} is the value provided in the above ODCM tables (i.e. S, SBAR, V, VBAR, G, GBAR). R_o is the former RAB distance (i.e. 1055), and R is the RAB distance (i.e. 833)

$$F_R = F_{R_o}\left[\frac{R_o}{R}\right]\exp 1.5$$

This analysis indicates that the change in range would increase the dose factor error by approximately 40%. Since this difference is well within the expected error of the current factors, no further adjustment in the above factors is considered necessary.

Table 4-7 (Page 6 of 15)

Maximum Offsite Finite Plume Gamma Dose Factors Based on 1 cm Depth at the Restricted Area Boundary for Kr-89

Downwind Direction	Restricted Area Bound (meters)	Elevated(Stack) Release Radius (meters)	S (mrad/yr)/(uCi/sec)	SBAR	Mixed Mode(Vent) Release Radius (meters)	V (mrad/yr)/(uCi/sec)	VBAR	Ground Level Release Radius (meters)	G (mrad/yr)/(uCi/sec)	GBAR
N	1036.	1036.	3.904E-04	3.794E-04	1036.	4.258E-04	4.139E-04	1036.	2.051E-03	1.992E-03
NNE	1378.	1378.	2.820E-04	2.741E-04	1378.	2.988E-04	2.904E-04	1378.	1.151E-03	1.118E-03
NE	1609.	1609.	1.750E-04	1.701E-04	1609.	1.654E-04	1.607E-04	1609.	6.564E-04	6.375E-04
ENE	1079.	1079.	2.703E-04	2.628E-04	1079.	2.619E-04	2.545E-04	1079.	1.450E-03	1.409E-03
E	1055.	1055.	3.041E-04	2.956E-04	1055.	2.972E-04	2.888E-04	1055.	1.569E-03	1.524E-03
ESE	1055.	1055.	3.931E-04	3.821E-04	1055.	3.909E-04	3.800E-04	1055.	1.682E-03	1.633E-03
SE	969.	969.	3.891E-04	3.782E-04	969.	4.188E-04	4.070E-04	969.	1.846E-03	1.793E-03
SSE	698.	698.	5.333E-04	5.184E-04	698.	5.797E-04	5.634E-04	698.	2.722E-03	2.643E-03
S	820.	820.	3.464E-04	3.367E-04	820.	3.312E-04	3.219E-04	820.	2.083E-03	2.023E-03
SSW	835.	835.	2.921E-04	2.839E-04	835.	2.779E-04	2.702E-04	835.	1.021E-03	9.916E-04
SW	628.	628.	5.830E-04	5.667E-04	628.	6.600E-04	6.415E-04	628.	3.274E-03	3.180E-03
WSW	533.	533.	6.913E-04	6.720E-04	533.	7.525E-04	7.314E-04	533.	4.592E-03	4.460E-03
W	524.	524.	6.981E-04	6.786E-04	524.	8.259E-04	8.028E-04	524.	5.967E-03	5.796E-03
WNW	643.	643.	4.295E-04	4.174E-04	643.	5.147E-04	5.003E-04	643.	3.746E-03	3.638E-03
NW	762.	762.	3.500E-04	3.402E-04	762.	4.035E-04	3.922E-04	762.	2.561E-03	2.488E-03
NNW	890.	890.	3.301E-04	3.208E-04	890.	3.415E-04	3.319E-04	890.	1.966E-03	1.909E-03

LASALLE SITE METEOROLOGICAL DATA 1/78 - 12/87

The restricted area boundary (RAB) was redefined in sectors E and ESE to 833 and 848 from 1055 and 1055 meters, respectively. As a result of this change of range, the dose factors were re-evaluated using the following equation. Here, F_n is the resulting dose factor at the new range (i.e. 833). F_{Ro} is the value provided in the above ODCM tables (i.e. S, SBAR, V, VBAR, G, GBAR). R_o is the former RAB distance (i.e. 1055), and R is the RAB distance (i.e. 833)

$$F_R = F_{R_o}\left[\frac{R_o}{R}\right]\exp 1.5$$

This analysis indicates that the change in range would increase the dose factor error by approximately 40%. Since this difference is well within the expected error of the current factors, no further adjustment in the above factors is considered necessary.

Table 4-7 (Page 7 of 15)

Maximum Offsite Finite Plume Gamma Dose Factors Based on 1 cm Depth at the Restricted Area Boundary for Kr-90

Downwind Direction	Restricted Area Bound (meters)	Elevated(Stack) Release Radius (meters)	S (mrad/yr)/(uCi/sec)	SBAR	Mixed Mode(Vent) Release Radius (meters)	V (mrad/yr)/(uCi/sec)	VBAR	Ground Level Release Radius (meters)	G (mrad/yr)/(uCi/sec)	GBAR
N	1036.	1036.	6.785E-05	6.586E-05	1036.	5.199E-05	5.047E-05	1036.	8.203E-05	7.954E-05
NNE	1378.	1378.	3.195E-05	3.102E-05	1378.	2.161E-05	2.098E-05	1378.	2.265E-05	2.198E-05
NE	1609.	1609.	1.240E-05	1.203E-05	1609.	6.949E-06	6.745E-06	1609.	7.357E-06	7.134E-06
ENE	1079.	1079.	3.718E-05	3.610E-05	1079.	2.538E-05	2.464E-05	1079.	4.577E-05	4.438E-05
E	1055.	1055.	4.582E-05	4.448E-05	1055.	3.257E-05	3.162E-05	1055.	6.817E-05	6.610E-05
ESE	1055.	1055.	6.315E-05	6.130E-05	1055.	5.071E-05	4.922E-05	1055.	1.078E-04	1.046E-04
SE	969.	969.	5.843E-05	5.673E-05	969.	5.324E-05	5.168E-05	969.	1.365E-04	1.324E-04
SSE	698.	698.	1.170E-04	1.136E-04	698.	1.103E-04	1.070E-04	698.	2.578E-04	2.500E-04
S	820.	820.	5.233E-05	5.081E-05	820.	3.888E-05	3.775E-05	820.	1.108E-04	1.075E-04
SSW	835.	835.	3.062E-05	2.972E-05	835.	1.274E-05	1.237E-05	835.	1.835E-05	1.779E-05
SW	628.	628.	9.754E-05	9.470E-05	628.	6.538E-05	6.347E-05	628.	1.410E-04	1.368E-04
WSW	533.	533.	1.892E-04	1.836E-04	533.	1.525E-04	1.480E-04	533.	4.861E-04	4.713E-04
W	524.	524.	2.165E-04	2.101E-04	524.	2.185E-04	2.121E-04	524.	8.427E-04	8.170E-04
WNW	643.	643.	1.018E-04	9.883E-05	643.	1.008E-04	9.787E-05	643.	3.141E-04	3.045E-04
NW	762.	762.	6.634E-05	6.440E-05	762.	5.815E-05	5.645E-05	762.	1.306E-04	1.267E-04
NNW	890.	890.	5.725E-05	5.558E-05	890.	4.336E-05	4.209E-05	890.	8.819E-05	8.551E-05

LASALLE SITE METEOROLOGICAL DATA 1/78 - 12/87

The restricted area boundary (RAB) was redefined in sectors E and ESE to 833 and 848 from 1055 and 1055 meters, respectively. As a result of this change of range, the dose factors were re-evaluated using the following equation. Here, F_n is the resulting dose factor at the new range (i.e. 833). F_{Ro} is the value provided in the above ODCM tables (i.e. S, SBAR, V, VBAR, G, GBAR). R_o is the former RAB distance (i.e. 1055), and R is the RAB distance (i.e. 833)

$$F_R = F_{R_o}\left[\frac{R_o}{R}\right]\exp 1.5$$

This analysis indicates that the change in range would increase the dose factor error by approximately 40%. Since this difference is well within the expected error of the current factors, no further adjustment in the above factors is considered necessary.

Table 4-7 (Page 8 of 15)

Maximum Offsite Finite Plume Gamma Dose Factors Based on 1 cm Depth at the Restricted Area Boundary for Xe-131m

Downwind Direction	Restricted Area Bound (meters)	Elevated(Stack) Release Radius (meters)	S (mrad/yr)/(uCi/sec)	SBAR (mrad/yr)/(uCi/sec)	Mixed Mode(Vent) Release Radius (meters)	V (mrad/yr)/(uCi/sec)	VBAR (mrad/yr)/(uCi/sec)	Ground Level Release Radius (meters)	G (mrad/yr)/(uCi/sec)	GBAR (mrad/yr)/(uCi/sec)
N	1036.	1036.	1.606E-06	1.473E-06	1036.	1.827E-06	1.679E-06	1036.	1.645E-04	1.283E-04
NNE	1378.	1378.	1.778E-06	1.572E-06	1378.	1.726E-06	1.553E-06	1378.	1.072E-04	8.384E-05
NE	1609.	1609.	1.327E-06	1.167E-06	1609.	1.409E-06	1.239E-06	1609.	7.747E-05	6.064E-05
ENE	1079.	1079.	1.254E-06	1.163E-06	1079.	1.612E-06	1.423E-06	1079.	1.225E-04	9.563E-05
E	1055.	1055.	1.249E-06	1.150E-06	1055.	1.806E-06	1.592E-06	1055.	1.376E-04	1.073E-04
ESE	1055.	1055.	1.566E-06	1.442E-06	1055.	2.270E-06	1.998E-06	1055.	1.298E-04	1.014E-04
SE	969.	969.	1.472E-06	1.365E-06	969.	2.406E-06	2.115E-06	969.	1.240E-04	9.696E-05
SSE	698.	698.	1.566E-06	1.476E-06	698.	2.969E-06	2.597E-06	698.	1.624E-04	1.267E-04
S	820.	820.	1.238E-06	1.151E-06	820.	1.983E-06	1.742E-06	820.	1.253E-04	9.802E-05
SSW	835.	835.	1.196E-06	1.103E-06	835.	2.003E-06	1.755E-06	835.	8.798E-05	6.885E-05
SW	628.	628.	1.802E-06	1.691E-06	628.	4.345E-06	3.728E-06	628.	2.109E-04	1.646E-04
WSW	533.	533.	1.859E-06	1.755E-06	533.	4.161E-06	3.577E-06	533.	2.324E-04	1.813E-04
W	524.	524.	1.800E-06	1.703E-06	524.	3.359E-06	2.972E-06	524.	3.000E-04	2.335E-04
WNW	643.	643.	1.263E-06	1.194E-06	643.	1.976E-06	1.791E-06	643.	2.446E-04	1.902E-04
NW	762.	762.	1.135E-06	1.069E-06	762.	1.561E-06	1.437E-06	762.	2.005E-04	1.560E-04
NNW	890.	890.	1.191E-06	1.112E-06	890.	1.363E-06	1.263E-06	890.	1.664E-04	1.295E-04

LASALLE SITE METEOROLOGICAL DATA 1/78 - 12/87

The restricted area boundary (RAB) was redefined in sectors E and ESE to 833 and 848 from 1055 and 1055 meters, respectively. As a result of this change of range, the dose factors were re-evaluated using the following equation. Here, F_n is the resulting dose factor at the new range (i.e. 833). F_{Ro} is the value provided in the above ODCM tables (i.e. S, SBAR, V, VBAR, G, GBAR). R_o is the former RAB distance (i.e. 1055), and R is the RAB distance (i.e. 833)

$$F_R = F_{R_o}\left[\frac{R_o}{R}\right]\exp 1.5$$

This analysis indicates that the change in range would increase the dose factor error by approximately 40%. Since this difference is well within the expected error of the current factors, no further adjustment in the above factors is considered necessary.

Table 4-7 (Page 9 of 15)

Maximum Offsite Finite Plume Gamma Dose Factors Based on 1 cm Depth at the Restricted Area Boundary for Xe-133m

Downwind Direction	Restricted Area Bound (meters)	Elevated(Stack) Release Radius (meters)	S (mrad/yr)/(uCi/sec)	SBAR	Mixed Mode(Vent) Release Radius (meters)	V (mrad/yr)/(uCi/sec)	VBAR	Ground Level Release Radius (meters)	G (mrad/yr)/(uCi/sec)	GBAR
N	1036.	1036.	8.557E-06	8.199E-06	1036.	9.814E-06	9.407E-06	1036.	2.822E-04	2.410E-04
NNE	1378.	1378.	7.917E-06	7.509E-06	1378.	8.400E-06	8.009E-06	1378.	1.901E-04	1.633E-04
NE	1609.	1609.	5.729E-06	5.423E-06	1609.	6.093E-06	5.768E-06	1609.	1.389E-04	1.195E-04
ENE	1079.	1079.	6.486E-06	6.205E-06	1079.	7.141E-06	6.771E-06	1079.	2.121E-04	1.815E-04
E	1055.	1055.	6.770E-06	6.492E-06	1055.	7.917E-06	7.501E-06	1055.	2.368E-04	2.024E-04
ESE	1055.	1055.	8.481E-06	8.132E-06	1055.	9.879E-06	9.355E-06	1055.	2.276E-04	1.951E-04
SE	969.	969.	8.229E-06	7.903E-06	969.	1.039E-05	9.834E-06	969.	2.189E-04	1.879E-04
SSE	698.	698.	9.363E-06	9.021E-06	698.	1.250E-05	1.181E-05	698.	2.815E-04	2.409E-04
S	820.	820.	6.991E-06	6.718E-06	820.	8.332E-06	8.075E-06	820.	2.236E-04	1.923E-04
SSW	835.	835.	6.541E-06	6.276E-06	835.	8.500E-06	8.036E-06	835.	1.574E-04	1.354E-04
SW	628.	628.	1.059E-05	1.020E-05	628.	1.637E-05	1.535E-05	628.	3.668E-04	3.140E-04
WSW	533.	533.	1.121E-05	1.081E-05	533.	1.588E-05	1.490E-05	533.	4.005E-04	3.423E-04
W	524.	524.	1.096E-05	1.056E-05	524.	1.504E-05	1.427E-05	524.	5.039E-04	4.287E-04
WNW	643.	643.	7.648E-06	7.374E-06	643.	9.956E-06	9.510E-06	643.	4.055E-04	3.441E-04
NW	762.	762.	6.774E-06	6.526E-06	762.	8.435E-06	8.088E-06	762.	3.334E-04	2.831E-04
NNW	890.	890.	6.855E-06	6.594E-06	890.	7.588E-06	7.286E-06	890.	2.794E-04	2.377E-04

LASALLE SITE METEOROLOGICAL DATA 1/78 - 12/87

The restricted area boundary (RAB) was redefined in sectors E and ESE to 833 and 848 from 1055 and 1055 meters, respectively. As a result of this change of range, the dose factors were re-evaluated using the following equation. Here, F_n is the resulting dose factor at the new range (i.e. 833). F_{Ro} is the value provided in the above ODCM tables (i.e. S, SBAR, V, VBAR, G, GBAR). R_o is the former RAB distance (i.e. 1055), and R is the RAB distance (i.e. 833)

$$F_R = F_{R_o}\left[\frac{R_o}{R}\right]\exp 1.5$$

This analysis indicates that the change in range would increase the dose factor error by approximately 40%. Since this difference is well within the expected error of the current factors, no further adjustment in the above factors is considered necessary.

Table 4-7 (Page 10 of 15)

Maximum Offsite Finite Plume Gamma Dose Factors Based on 1 cm Depth at the Restricted Area Boundary for Xe-133

Downwind Direction	Restricted Area Bound (meters)	Elevated(Stack) Release Radius (meters)	S (mrad/yr)/(uCi/sec)	SBAR	Mixed Mode(Vent) Release Radius (meters)	V (mrad/yr)/(uCi/sec)	VBAR	Ground Level Release Radius (meters)	G (mrad/yr)/(uCi/sec)	GBAR
N	1036.	1036.	7.010E-06	6.757E-06	1036.	7.933E-06	7.649E-06	1036.	3.136E-04	2.785E-04
NNE	1378.	1378.	6.939E-06	6.629E-06	1378.	7.149E-06	6.860E-06	1378.	2.132E-04	1.903E-04
NE	1609.	1609.	5.088E-06	4.853E-06	1609.	5.323E-06	5.076E-06	1609.	1.562E-04	1.397E-04
ENE	1079.	1079.	5.306E-06	5.106E-06	1079.	6.045E-06	5.769E-06	1079.	2.362E-04	2.101E-04
E	1055.	1055.	5.535E-06	5.340E-06	1055.	6.764E-06	6.452E-06	1055.	2.432E-04	2.336E-04
ESE	1055.	1055.	7.016E-06	6.769E-06	1055.	8.566E-06	8.169E-06	1055.	2.543E-04	2.266E-04
SE	969.	969.	6.641E-06	6.416E-06	969.	8.978E-06	8.558E-06	969.	2.450E-04	2.185E-04
SSE	698.	698.	7.217E-06	6.994E-06	698.	1.073E-05	1.021E-05	698.	3.132E-04	2.785E-04
S	820.	820.	5.369E-06	5.188E-06	820.	7.024E-06	6.687E-06	820.	2.515E-04	2.246E-04
SSW	835.	835.	4.969E-06	4.793E-06	835.	6.598E-06	6.266E-06	835.	1.770E-04	1.582E-04
SW	628.	628.	7.798E-06	7.549E-06	628.	1.362E-05	1.285E-05	628.	4.090E-04	3.640E-04
WSW	533.	533.	8.245E-06	7.992E-06	533.	1.326E-05	1.252E-05	533.	4.447E-04	3.951E-04
W	524.	524.	8.166E-06	7.919E-06	524.	1.220E-05	1.164E-05	524.	5.551E-04	4.911E-04
WNW	643.	643.	5.715E-06	5.541E-06	643.	7.885E-06	7.574E-06	643.	4.444E-04	3.922E-04
NW	762.	762.	5.117E-06	4.958E-06	762.	6.538E-06	6.303E-06	762.	3.661E-04	3.235E-04
NNW	890.	890.	5.340E-06	5.165E-06	890.	5.911E-06	5.708E-06	890.	3.080E-04	2.725E-04

LASALLE SITE METEOROLOGICAL DATA 1/78 - 12/87

The restricted area boundary (RAB) was redefined in sectors E and ESE to 833 and 848 from 1055 and 1055 meters, respectively. As a result of this change of range, the dose factors were re-evaluated using the following equation. Here, F_n is the resulting dose factor at the new range (i.e. 833). F_{Ro} is the value provided in the above ODCM tables (i.e. S, SBAR, V, VBAR, G, GBAR). R_o is the former RAB distance (i.e. 1055), and R is the RAB distance (i.e. 833)

$$F_R = F_{R_o}\left[\frac{R_o}{R}\right]\exp 1.5$$

This analysis indicates that the change in range would increase the dose factor error by approximately 40%. Since this difference is well within the expected error of the current factors, no further adjustment in the above factors is considered necessary.

Table 4-7 (Page 11 of 15)

Maximum Offsite Finite Plume Gamma Dose Factors Based on 1 cm Depth at the Restricted Area Boundary for Xe-135m

Downwind Direction	Restricted Area Bound (meters)	Elevated(Stack) Release Radius (meters)	S (mrad/yr)/(uCi/sec)	SBAR	Mixed Mode(Vent) Release Radius (meters)	V (mrad/yr)/(uCi/sec)	VBAR	Ground Level Release Radius (meters)	G (mrad/yr)/(uCi/sec)	GBAR
N	1036.	1036.	1.396E-04	1.349E-04	1036.	1.598E-04	1.545E-04	1036.	1.531E-03	1.475E-03
NNE	1378.	1378.	1.151E-04	1.113E-04	1378.	1.274E-04	1.232E-04	1378.	1.019E-03	9.821E-04
NE	1609.	1609.	8.046E-05	7.779E-05	1609.	8.260E-05	7.985E-05	1609.	7.033E-04	6.778E-04
ENE	1079.	1079.	1.024E-04	9.898E-05	1079.	1.064E-04	1.028E-04	1079.	1.147E-03	1.105E-03
E	1055.	1055.	1.121E-04	1.084E-04	1055.	1.183E-04	1.144E-04	1055.	1.253E-03	1.207E-03
ESE	1055.	1055.	1.411E-04	1.365E-04	1055.	1.490E-04	1.441E-04	1055.	1.256E-03	1.211E-03
SE	969.	969.	1.389E-04	1.343E-04	969.	1.575E-04	1.522E-04	969.	1.262E-03	1.216E-03
SSE	698.	698.	1.692E-04	1.636E-04	698.	1.955E-04	1.890E-04	698.	1.667E-03	1.606E-03
S	820.	820.	1.196E-04	1.157E-04	820.	1.251E-04	1.209E-04	820.	1.363E-03	1.314E-03
SSW	835.	835.	1.104E-04	1.068E-04	835.	1.260E-04	1.218E-04	835.	8.762E-04	8.444E-04
SW	628.	628.	1.904E-04	1.841E-04	628.	2.444E-04	2.363E-04	628.	2.173E-03	2.094E-03
WSW	533.	533.	2.063E-04	1.995E-04	533.	2.427E-04	2.345E-04	533.	2.479E-03	2.388E-03
W	524.	524.	2.033E-04	1.966E-04	524.	2.511E-04	2.427E-04	524.	3.050E-03	2.937E-03
WNW	643.	643.	1.363E-04	1.318E-04	643.	1.687E-04	1.631E-04	643.	2.286E-03	2.201E-03
NW	762.	762.	1.187E-04	1.148E-04	762.	1.423E-04	1.376E-04	762.	1.806E-03	1.739E-03
NNW	890.	890.	1.161E-04	1.122E-04	890.	1.259E-04	1.217E-04	890.	1.482E-03	1.427E-03

LASALLE SITE METEOROLOGICAL DATA 1/78 - 12/87

The restricted area boundary (RAB) was redefined in sectors E and ESE to 833 and 848 from 1055 and 1055 meters, respectively. As a result of this change of range, the dose factors were re-evaluated using the following equation. Here, F_n is the resulting dose factor at the new range (i.e. 833). F_{Ro} is the value provided in the above ODCM tables (i.e. S, SBAR, V, VBAR, G, GBAR). R_o is the former RAB distance (i.e. 1055), and R is the RAB distance (i.e. 833)

$$F_R = F_{R_o}\left[\frac{R_o}{R}\right]\exp 1.5$$

This analysis indicates that the change in range would increase the dose factor error by approximately 40%. Since this difference is well within the expected error of the current factors, no further adjustment in the above factors is considered necessary.

Table 4-7 (Page 12 of 15)

Maximum Offsite Finite Plume Gamma Dose Factors Based on 1 cm Depth at the Restricted Area Boundary for Xe-135

Downwind Direction	Restricted Area Bound (meters)	Elevated(Stack) Release Radius (meters)	S (mrad/yr)/(uCi/sec)	SBAR	Mixed Mode(Vent) Release Radius (meters)	V (mrad/yr)/(uCi/sec)	VBAR	Ground Level Release Radius (meters)	G (mrad/yr)/(uCi/sec)	GBAR
N	1036.	1036.	8.165E-05	7.902E-05	1036.	9.387E-05	9.085E-05	1036.	1.302E-03	1.257E-03
NNE	1378.	1378.	7.171E-05	6.940E-05	1378.	7.821E-05	7.569E-05	1378.	9.178E-04	8.866E-04
NE	1609.	1609.	5.140E-05	4.974E-05	1609.	5.463E-05	5.288E-05	1609.	6.801E-04	6.570E-04
ENE	1079.	1079.	6.139E-05	5.942E-05	1079.	6.476E-05	6.267E-05	1079.	9.912E-04	9.573E-04
E	1055.	1055.	6.493E-05	6.284E-05	1055.	7.155E-05	6.924E-05	1055.	1.097E-03	1.060E-03
ESE	1055.	1055.	8.130E-05	7.869E-05	1055.	8.905E-05	8.617E-05	1055.	1.083E-03	1.046E-03
SE	969.	969.	7.953E-05	7.697E-05	969.	9.346E-05	9.044E-05	969.	1.052E-03	1.017E-03
SSE	698.	698.	9.205E-05	8.910E-05	698.	1.117E-04	1.081E-04	698.	1.321E-03	1.276E-03
S	820.	820.	6.782E-05	6.564E-05	820.	7.666E-05	7.419E-05	820.	1.093E-03	1.056E-03
SSW	835.	835.	6.306E-05	6.103E-05	835.	7.636E-05	7.389E-05	835.	7.699E-04	7.438E-04
SW	628.	628.	1.039E-04	1.006E-04	628.	1.409E-04	1.363E-04	628.	1.729E-03	1.670E-03
WSW	533.	533.	1.106E-04	1.071E-04	533.	1.372E-04	1.328E-04	533.	1.864E-03	1.801E-03
W	524.	524.	1.082E-04	1.048E-04	524.	1.374E-04	1.329E-04	524.	2.256E-03	2.179E-03
WNW	643.	643.	7.538E-05	7.296E-05	643.	9.395E-05	9.092E-05	643.	1.775E-03	1.713E-03
NW	762.	762.	6.654E-05	6.440E-05	762.	8.098E-05	7.838E-05	762.	1.466E-03	1.415E-03
NNW	890.	890.	6.671E-05	6.456E-05	890.	7.327E-05	7.092E-05	890.	1.247E-03	1.204E-03

LASALLE SITE METEOROLOGICAL DATA 1/78 - 12/87

The restricted area boundary (RAB) was redefined in sectors E and ESE to 833 and 848 from 1055 and 1055 meters, respectively. As a result of this change of range, the dose factors were re-evaluated using the following equation. Here, F_n is the resulting dose factor at the new range (i.e. 833). F_{Ro} is the value provided in the above ODCM tables (i.e. S, SBAR, V, VBAR, G, GBAR). R_o is the former RAB distance (i.e. 1055), and R is the RAB distance (i.e. 833)

$$F_R = F_{R_o}\left[\frac{R_o}{R}\right]\exp 1.5$$

This analysis indicates that the change in range would increase the dose factor error by approximately 40%. Since this difference is well within the expected error of the current factors, no further adjustment in the above factors is considered necessary.

Table 4-7 (Page 13 of 15)

Maximum Offsite Finite Plume Gamma Dose Factors Based on 1 cm Depth at the Restricted Area Boundary for Xe-137

Downwind Direction	Restricted Area Bound (meters)	Elevated(Stack) Release Radius (meters)	S (mrad/yr)/(uCi/sec)	SBAR	Mixed Mode(Vent) Release Radius (meters)	V (mrad/yr)/(uCi/sec)	VBAR	Ground Level Release Radius (meters)	G (mrad/yr)/(uCi/sec)	GBAR
N	1036.	1036.	4.780E-05	4.627E-05	1036.	5.242E-05	5.074E-05	1036.	3.409E-04	3.298E-04
NNE	1378.	1378.	3.585E-05	3.471E-05	1378.	3.814E-05	3.692E-05	1378.	1.975E-04	1.911E-04
NE	1609.	1609.	2.282E-05	2.209E-05	1609.	2.185E-05	2.115E-05	1609.	1.166E-04	1.128E-04
ENE	1079.	1079.	3.342E-05	3.236E-05	1079.	3.282E-05	3.177E-05	1079.	2.437E-04	2.358E-04
E	1055.	1055.	3.741E-05	3.622E-05	1055.	3.716E-05	3.597E-05	1055.	2.625E-04	2.540E-04
ESE	1055.	1055.	4.827E-05	4.673E-05	1055.	4.871E-05	4.715E-05	1055.	2.765E-04	2.676E-04
SE	969.	969.	4.743E-05	4.591E-05	969.	5.186E-05	5.023E-05	969.	2.989E-04	2.892E-04
SSE	698.	698.	6.273E-05	6.073E-05	698.	6.983E-05	6.760E-05	698.	4.329E-04	4.189E-04
S	820.	820.	4.131E-05	4.002E-05	820.	4.042E-05	3.913E-05	820.	3.373E-04	3.264E-04
SSW	835.	835.	3.521E-05	3.408E-05	835.	3.424E-05	3.315E-05	835.	1.748E-04	1.691E-04
SW	628.	628.	6.779E-05	6.563E-05	628.	7.938E-05	7.685E-05	628.	5.333E-04	5.161E-04
WSW	533.	533.	7.919E-05	7.667E-05	533.	8.829E-05	8.548E-05	533.	7.164E-04	6.932E-04
W	524.	524.	7.990E-05	7.736E-05	524.	9.608E-05	9.302E-05	524.	9.223E-04	8.924E-04
WNW	643.	643.	5.023E-05	4.863E-05	643.	6.090E-05	5.896E-05	643.	6.002E-04	5.808E-04
NW	762.	762.	4.160E-05	4.028E-05	762.	4.841E-05	4.687E-05	762.	4.228E-04	4.090E-04
NNW	890.	890.	3.985E-05	3.858E-05	890.	4.152E-05	4.020E-05	890.	3.279E-04	3.172E-04

LASALLE SITE METEOROLOGICAL DATA 1/78 - 12/87

The restricted area boundary (RAB) was redefined in sectors E and ESE to 833 and 848 from 1055 and 1055 meters, respectively. As a result of this change of range, the dose factors were re-evaluated using the following equation. Here, F_n is the resulting dose factor at the new range (i.e. 833). F_{Ro} is the value provided in the above ODCM tables (i.e. S, SBAR, V, VBAR, G, GBAR). R_o is the former RAB distance (i.e. 1055), and R is the RAB distance (i.e. 833)

$$F_R = F_{R_o}\left[\frac{R_o}{R}\right]\exp 1.5$$

This analysis indicates that the change in range would increase the dose factor error by approximately 40%. Since this difference is well within the expected error of the current factors, no further adjustment in the above factors is considered necessary.

Table 4-7 (Page 14 of 15)

Maximum Offsite Finite Plume Gamma Dose Factors Based on 1 cm Depth at the Restricted Area Boundary for Xe-138

Downwind Direction	Restricted Area Bound (meters)	Elevated(Stack) Release Radius (meters)	S (mrad/yr)/(uCi/sec)	SBAR	Mixed Mode(Vent) Release Radius (meters)	V (mrad/yr)/(uCi/sec)	VBAR	Ground Level Release Radius (meters)	G (mrad/yr)/(uCi/sec)	GBAR
N	1036.	1036.	3.926E-04	3.816E-04	1036.	4.523E-04	4.396E-04	1036.	3.178E-03	3.084E-03
NNE	1378.	1378.	3.160E-04	3.071E-04	1378.	3.536E-04	3.437E-04	1378.	2.117E-03	2.055E-03
NE	1609.	1609.	2.198E-04	2.136E-04	1609.	2.272E-04	2.208E-04	1609.	1.457E-03	1.414E-03
ENE	1079.	1079.	2.887E-04	2.806E-04	1079.	2.996E-04	2.912E-04	1079.	2.383E-03	2.313E-03
E	1055.	1055.	3.167E-04	3.079E-04	1055.	3.323E-04	3.230E-04	1055.	2.600E-03	2.524E-03
ESE	1055.	1055.	3.961E-04	3.850E-04	1055.	4.149E-04	4.032E-04	1055.	2.618E-03	2.541E-03
SE	969.	969.	3.938E-04	3.828E-04	969.	4.408E-04	4.285E-04	969.	2.641E-03	2.564E-03
SSE	698.	698.	4.911E-04	4.773E-04	698.	5.540E-04	5.384E-04	698.	3.494E-03	3.391E-03
S	820.	820.	3.498E-04	3.400E-04	820.	3.606E-04	3.505E-04	820.	2.857E-03	2.773E-03
SSW	835.	835.	3.277E-04	3.186E-04	835.	3.832E-04	3.724E-04	835.	1.828E-03	1.774E-03
SW	628.	628.	5.698E-04	5.538E-04	628.	7.209E-04	7.007E-04	628.	4.546E-03	4.412E-03
WSW	533.	533.	6.144E-04	5.973E-04	533.	7.121E-04	6.921E-04	533.	5.206E-03	5.053E-03
W	524.	524.	5.976E-04	5.809E-04	524.	7.316E-04	7.113E-04	524.	6.383E-03	6.195E-03
WNW	643.	643.	3.986E-04	3.875E-04	643.	4.887E-04	4.750E-04	643.	4.757E-03	4.616E-03
NW	762.	762.	3.457E-04	3.360E-04	762.	4.131E-04	4.016E-04	762.	3.746E-03	3.635E-03
NNW	890.	890.	3.330E-04	3.236E-04	890.	3.626E-04	3.525E-04	890.	3.069E-03	2.978E-03

LASALLE SITE METEOROLOGICAL DATA 1/78 - 12/87

The restricted area boundary (RAB) was redefined in sectors E and ESE to 833 and 848 from 1055 and 1055 meters, respectively. As a result of this change of range, the dose factors were re-evaluated using the following equation. Here, F_n is the resulting dose factor at the new range (i.e. 833). F_{R_o} is the value provided in the above ODCM tables (i.e. S, SBAR, V, VBAR, G, GBAR). R_o is the former RAB distance (i.e. 1055), and R is the RAB distance (i.e. 833)

$$F_R = F_{R_o}\left[\frac{R_o}{R}\right]\exp 1.5$$

This analysis indicates that the change in range would increase the dose factor error by approximately 40%. Since this difference is well within the expected error of the current factors, no further adjustment in the above factors is considered necessary.

Table 4-7 (Page 15 of 15)

Maximum Offsite Finite Plume Gamma Dose Factors Based on 1 cm Depth at the Restricted Area Boundary for Ar-41

Downwind Direction	Restricted Area Bound (meters)	Elevated(Stack) Release Radius (meters)	S (mrad/yr)/(uCi/sec)	SBAR (mrad/yr)/(uCi/sec)	Mixed Mode(Vent) Release Radius (meters)	V (mrad/yr)/(uCi/sec)	VBAR (mrad/yr)/(uCi/sec)	Ground Level Release Radius (meters)	G (mrad/yr)/(uCi/sec)	GBAR (mrad/yr)/(uCi/sec)
N	1036.	1036.	4.746E-04	4.594E-04	1036.	5.528E-04	5.351E-04	1036.	4.557E-03	4.411E-03
NNE	1378.	1378.	3.954E-04	3.828E-04	1378.	4.439E-04	4.297E-04	1378.	3.203E-03	3.101E-03
NE	1609.	1609.	2.825E-04	2.734E-04	1609.	3.029E-04	2.932E-04	1609.	2.358E-03	2.283E-03
ENE	1079.	1079.	3.582E-04	3.468E-04	1079.	3.729E-04	3.610E-04	1079.	3.472E-03	3.361E-03
E	1055.	1055.	3.818E-04	3.696E-04	1055.	4.100E-04	3.969E-04	1055.	3.841E-03	3.718E-03
ESE	1055.	1055.	4.723E-04	4.574E-04	1055.	5.025E-04	4.864E-04	1055.	3.807E-03	3.685E-03
SE	969.	969.	4.711E-04	4.560E-04	969.	5.320E-04	5.149E-04	969.	3.715E-03	3.597E-03
SSE	698.	698.	5.672E-04	5.490E-04	698.	6.491E-04	6.284E-04	698.	4.695E-03	4.545E-03
S	820.	820.	4.212E-04	4.077E-04	820.	4.585E-04	4.438E-04	820.	3.879E-03	3.755E-03
SSW	835.	835.	3.994E-04	3.866E-04	835.	4.930E-04	4.772E-04	835.	2.700E-03	2.614E-03
SW	628.	628.	6.711E-04	6.496E-04	628.	8.591E-04	8.316E-04	628.	6.139E-03	5.943E-03
WSW	533.	533.	7.089E-04	6.862E-04	533.	8.229E-04	7.966E-04	533.	6.667E-03	6.453E-03
W	524.	524.	6.802E-04	6.584E-04	524.	8.291E-04	8.026E-04	524.	8.057E-03	7.799E-03
WNW	643.	643.	4.708E-04	4.558E-04	643.	5.716E-04	5.533E-04	643.	6.300E-03	6.099E-03
NW	762.	762.	4.123E-04	3.991E-04	762.	4.970E-04	4.811E-04	762.	5.173E-03	5.008E-03
NNW	890.	890.	4.025E-04	3.896E-04	890.	4.447E-04	4.305E-04	890.	4.374E-03	4.234E-03

LASALLE SITE METEOROLOGICAL DATA 1/78 - 12/87

The restricted area boundary (RAB) was redefined in sectors E and ESE to 833 and 848 from 1055 and 1055 meters, respectively. As a result of this change of range, the dose factors were re-evaluated using the following equation. Here, F_n is the resulting dose factor at the new range (i.e. 833). F_{Ro} is the value provided in the above ODCM tables (i.e. S, SBAR, V, VBAR, G, GBAR). R_o is the former RAB distance (i.e. 1055), and R is the RAB distance (i.e. 833)

$$F_R = F_{R_o}\left[\frac{R_o}{R}\right]\exp 1.5$$

This analysis indicates that the change in range would increase the dose factor error by approximately 40%. Since this difference is well within the expected error of the current factors, no further adjustment in the above factors is considered necessary.

Table 4-8

Parameters for Calculations of N-16 Skyshine Radiation From LaSalle

Location Number K	Activity	Occupancy Hours OH_k[a]	Occupancy Factor[c] OF_k	Shielding Factor SF_k	Distance R_k (m)
1	Living at home (nearest resident)	8360	0.95	0.7	1100[b]
2	Fishing	400	0.05	1.0	2100
3	Living at National Guard Facility	2500		0.7	2400

$M_h = 5$

K = 2.28 E-5 mrem / (MWe-hr)

These parameters are used to obtain an initial estimate of skyshine dose to the maximally exposed member of the public using ODCM Part II, Section 5, Equation 5-1. If desired, more realistic parameters could be used in place of these to refine the estimate. For example, one could determine whether the nearest resident really fishes the specified number of hours at the specified location.

Notes:

a The amount of time in a year that a maximally exposed fisherman would spend fishing near the site is estimates as 12 hours per week for 8 months per year. This yields an estimate of:

$$\left(12\frac{Hours}{Week}\right)\left[\frac{8\left(\frac{months}{year}\right)}{12\left(\frac{months}{year}\right)}\right]\left(52\frac{weeks}{year}\right) = 416\frac{hours}{year}$$

b Distance to nearest residence. (See Table 4-1)

c The OF_k is the quotient of the number of hours a location is occupied and the number of hours in a year. Thus, OH_k /8760 hours = OF_k rounded to the nearest 0.01 digit.

In determining the maximally exposed individual, the following possibilities were considered: the nearest resident, fisherman, and persons at the National Guard facility north of the site. The annual exposre time and .location of a maximally exposed fisherman were estimated on the basis of discussion with a member of the station staff. The nearest resident was found to have the greatest exposure to skyshine. For details, see Based on Sargent & Lundy, Nuclear Safeguards and Licensing Division, LaSalle calculation no. ATD-0139, "N-16 Skyshine Ground Level Doses from LaSalle Turbine Systems & Piping, Revision 0.

Table 4-9 (page 1 of 2)

Elevated Level Joint Frequency Distribution Table Summary

375 Foot Elevation Data

Summary Table of Percent by Direction and Class

Class	N	NNE	NE	ENE	E	ESE	SE	SSE	S	SSW	SW	WSW	W	WNW	NW	NNW	Total
A	.024	.032	.067	.057	.062	.040	.030	.080	.066	.169	.087	.061	.056	.064	.063	.024	.943
B	.149	.175	.227	.149	.080	.047	.056	.070	.233	.463	.330	.189	.145	.192	.153	.183	2.843
C	.300	.262	.351	.255	.138	.069	.104	.130	.375	.579	.454	.381	.344	.420	.329	.333	4.908
D	3.100	2.634	3.282	3.192	2.780	1.948	1.787	2.053	2.810	2.875	2.270	2.460	3.248	4.533	3.922	3.681	46.551
E	1.018	.813	1.182	1.431	1.823	1.495	1.460	1.752	2.667	2.978	2.124	1.531	1.575	2.065	1.870	1.196	27.061
F	.320	.182	.248	.280	.469	.707	.905	.995	1.459	1.735	1.661	1.041	1.012	1.099	.894	.553	13.435
G	.055	.039	.022	.012	.041	.061	.278	.507	.674	.688	.880	.460	.308	.242	.217	.103	4.388
Total	4.966	4.237	5.359	5.396	5.394	4.268	4.601	5.647	8.474	9.487	7.487	6.083	6.688	8.615	7.248	6.073	100.000

Summary Table of Percent by Direction and Speed

Speed	N	NNE	NE	ENE	E	ESE	SE	SSE	S	SSW	SW	WSW	W	WNW	NW	NNW	Total
.45	.018	.017	.015	.010	.006	.010	.013	.006	.015	.010	.000	.013	.000	.000	.001	.000	.137
1.05	.018	.033	.030	.037	.021	.023	.032	.027	.027	.017	.017	.028	.021	.024	.034	.027	.402
2.05	.162	.260	.276	.215	.147	.149	.159	.171	.165	.168	.155	.135	.147	.115	.138	.160	2.731
3.05	.361	.479	.551	.477	.368	.267	.311	.276	.323	.317	.272	.302	.321	.317	.302	.311	5.599
4.05	.506	.547	.785	.547	.494	.429	.437	.404	.453	.465	.428	.400	.387	.482	.487	.465	7.785
5.05	.489	.598	.792	.515	.451	.403	.420	.505	.477	.489	.492	.472	.493	.540	.542	.533	8.213
6.05	.577	.599	.551	.595	.506	.419	.479	.483	.558	.554	.523	.487	.556	.598	.568	.556	9.160
8.05	1.297	.918	1.353	1.289	1.207	.872	.969	1.062	1.415	1.600	1.371	1.164	1.207	1.622	1.669	1.623	20.637
10.05	.912	.421	.487	.845	.898	.751	.736	.947	1.388	1.952	1.328	1.088	1.240	1.671	1.557	1.270	17.188
13.05	.482	.210	.183	.594	.858	.692	.749	1.187	2.107	2.440	1.822	1.338	1.432	1.962	1.428	.900	18.288
18.00	.120	.055	.026	.231	.326	.240	.283	.459	1.476	1.815	1.043	.581	.746	1.137	.404	.222	9.183
69.00	.002	.000	.000	.011	.011	.011	.013	.036	.072	.109	.038	.066	.137	.147	.018	.018	.708
Total	4.966	4.237	5.359	5.396	5.394	4.268	4.601	5.647	8.474	9.487	7.487	6.083	6.688	8.615	7.248	6.073	100.000

NOTE: Wind directions in tables are presented in "wind from" and not "wind to" direction.

Table 4-9 (page 2 of 2)

Elevated Level Joint Frequency Distribution Table Summary

375 Foot Elevation Data

Summary Table of Percent by Speed and Class

Class Speed	A	B	C	D	E	F	G
.45	.000	.000	.000	.052	.058	.023	.004
1.05	.001	.004	.004	.176	.153	.060	.006
2.05	.017	.041	.109	1.540	.656	.307	.050
3.05	.046	.159	.290	3.269	1.193	.547	.096
4.05	.102	.249	.499	4.364	1.629	.788	.166
5.05	.102	.335	.547	4.159	1.845	.918	.210
6.05	.106	.341	.565	4.562	2.320	.966	.268
8.05	.225	.701	1.116	10.181	5.190	2.450	.755
10.05	.141	.429	.785	7.441	4.924	2.591	.878
13.05	.134	.404	.698	6.977	5.670	3.206	1.285
18.00	.068	.163	.256	3.424	3.126	1.511	.615
99.00	.001	.017	.038	.398	.199	.043	.015

Table 4-10 (Page 1 of 2)

Mid Elevation Joint Frequency Distribution Table Summaries

Summary Table of Percent by Direction and Class

200 Foot Elevation Data

Class	N	NNE	NE	ENE	E	ESE	SE	SSE	S	SSW	SW	WSW	W	WNW	NW	NNW	Total
A	.381	.248	.801	.790	.531	.256	.142	.119	.231	.357	.441	.370	.453	.653	.578	.678	7.030
B	.313	.249	.377	.343	.290	.175	.110	.104	.207	.288	.337	.292	.350	.496	.530	.612	5.082
C	.531	.420	.566	.434	.390	.299	.321	.282	.370	.498	.478	.470	.606	.573	.710	.785	7.634
D	2.274	2.315	2.817	2.248	2.669	1.715	1.877	1.775	2.761	2.045	2.098	1.639	2.140	2.069	2.841	2.408	37.410
E	.777	.734	1.088	1.105	1.486	1.323	1.243	1.438	2.678	2.910	1.697	1.176	1.226	1.712	1.429	1.015	23.034
F	.233	.155	.177	.205	.433	.809	.802	.801	1.210	1.362	1.183	.862	.854	1.017	.848	.446	11.419
G	.065	.060	.021	.012	.069	.265	.635	.896	1.244	1.238	.897	.689	.740	.778	.562	.150	8.411
Total	4.575	4.182	5.847	5.138	5.857	4.841	4.830	5.413	8.722	9.721	7.319	5.698	6.268	8.297	7.498	6.094	100.000

Summary Table of Percent by Direction and Speed

Speed	N	NNE	NE	ENE	E	ESE	SE	SSE	S	SSW	SW	WSW	W	WNW	NW	NNW	Total
.45	.042	.003	.000	.020	.015	.003	.005	.009	.005	.000	.008	.000	.000	.000	.000	.000	.113
1.05	.046	.072	.063	.042	.033	.025	.040	.034	.037	.021	.026	.028	.031	.026	.034	.046	.613
2.05	.219	.575	.500	.323	.233	.197	.202	.201	.232	.193	.201	.189	.183	.151	.153	.163	3.915
3.05	.442	1.132	1.140	.891	.497	.350	.388	.363	.366	.344	.338	.353	.413	.374	.388	.374	7.948
4.05	.536	.970	1.375	.728	.617	.528	.545	.632	.599	.583	.557	.486	.461	.563	.530	.618	10.319
5.05	.681	.584	1.041	.800	.639	.553	.535	.558	.821	.810	.579	.580	.590	.686	.737	.720	10.583
6.05	.729	.383	.670	.802	.777	.726	.708	.681	.843	.887	.696	.687	.695	.815	.940	.918	11.959
8.05	1.086	.339	.576	1.004	1.557	1.351	1.233	1.426	2.234	2.473	1.925	1.484	1.604	1.933	1.803	1.559	23.790
10.05	.472	.108	.153	.475	.801	.691	.890	1.015	2.132	2.439	1.707	1.106	1.106	1.586	1.315	.910	18.593
13.05	.202	.018	.029	.214	.509	.346	.286	.476	1.342	1.778	1.012	.626	.790	1.414	1.066	.580	10.726
16.00	.111	.001	.001	.034	.177	.067	.076	.113	.310	.383	.154	.159	.300	.583	.312	.203	3.068
19.00	.007	.000	.000	.004	.001	.000	.000	.006	.010	.009	.014	.030	.074	.074	.013	.004	.247
Total	4.575	4.182	5.847	5.138	5.857	4.841	4.830	5.413	8.722	9.721	7.319	5.698	6.268	8.297	7.498	6.094	100.000

NOTE: Wind directions in tables are presented in "wind from" and not "wind to" direction.

Table 4-10 (Page 2 of 2)

Mid Elevation Joint Frequency Distribution Table Summaries

200 Foot Elevation Data

Summary Table of Percent by Speed and Class

Class / Speed	A	B	C	D	E	F	G
.45	.000	.000	.001	.046	.037	.021	.009
1.05	.013	.004	.022	.219	.175	.116	.063
2.05	.172	.130	.291	1.946	.732	.437	.207
3.05	.400	.452	.809	3.533	1.531	.642	.378
4.05	.776	.588	.970	4.134	2.328	.930	.591
5.05	.828	.588	.968	3.816	2.456	1.150	.690
6.05	.838	.533	.921	4.368	2.742	1.461	1.079
8.05	1.542	1.208	1.671	8.019	5.377	3.357	2.616
10.05	1.030	.780	.879	5.271	4.154	2.318	2.160
13.05	.874	.558	.764	4.156	2.854	.835	.587
18.00	.331	.307	.231	1.621	.630	.046	.020
29.00	.029	.012	.016	.162	.020	.006	.001

Table 4-11 (Page 1 of 2)

Ground Level Joint Frequency Distribution Table Summary

Summary Table of Percent by Direction and Class

Class	N	NNE	NE	ENE	E	ESE	SE	SSE	S	SSW	SW	WSW	W	WNW	NW	NNW	Total
A	.411	.318	.688	.687	.894	.306	.133	.138	.212	.407	.478	.447	.832	.865	.844	.904	7.962
B	.314	.150	.278	.310	.276	.177	.106	.071	.172	.339	.369	.222	.293	.405	.505	.501	4.288
C	.280	.233	.330	.328	.262	.270	.189	.172	.285	.385	.424	.343	.380	.507	.638	.501	5.626
D	3.149	1.449	2.178	2.504	2.687	1.735	1.677	1.640	2.195	2.673	2.178	1.925	2.243	3.240	3.269	3.509	37.081
E	1.121	.861	1.168	1.021	1.758	1.434	1.303	1.561	2.656	2.795	1.948	1.480	1.557	1.945	1.692	.917	24.947
F	.186	.087	.177	.160	.646	.840	.750	.817	1.259	1.290	1.376	1.039	1.048	.867	.809	.378	11.499
G	.019	.008	.017	.025	.137	.615	.873	1.023	1.183	1.060	.898	.866	.925	.490	.314	.093	6.627
Total	5.570	2.906	4.636	5.235	6.349	5.379	4.932	5.319	7.862	8.629	7.690	6.422	6.979	8.118	7.771	5.803	100.000

Summary Table of Percent by Direction and Speed

Speed	N	NNE	NE	ENE	E	ESE	SE	SSE	S	SSW	SW	WSW	W	WNW	NW	NNW	Total
.45	.000	.004	.000	.003	.002	.000	.000	.003	.006	.002	.003	.004	.002	.000	.003	.002	.029
1.05	.052	.048	.073	.046	.058	.056	.052	.073	.081	.075	.079	.067	.102	.093	.066	.065	1.085
2.05	.378	.609	.813	.517	.424	.601	.686	.862	.532	.441	.457	.466	.613	.626	.497	.488	8.731
3.05	1.124	1.183	1.802	1.268	1.191	1.270	1.276	1.222	1.149	1.156	1.112	1.031	1.095	1.079	.931	1.043	18.832
4.05	1.326	.621	1.122	1.230	1.420	1.116	1.058	1.079	1.731	1.719	1.648	1.550	1.274	1.022	1.000	.896	19.813
5.05	1.129	.247	.617	1.106	1.189	.694	.842	.739	1.276	1.509	1.305	1.129	1.029	1.104	1.014	.777	15.508
6.05	.687	.091	.297	.597	.878	.551	.509	.586	1.047	1.434	1.112	.806	.894	.914	.966	.813	12.183
8.05	.628	.102	.106	.422	.817	.767	.480	.842	1.262	1.836	1.291	.837	1.072	1.478	1.844	1.014	14.189
10.05	.145	.002	.006	.042	.303	.237	.172	.389	.861	.888	.532	.358	.480	.942	.933	.467	6.098
13.05	.114	.000	.000	.002	.067	.093	.056	.094	.202	.258	.119	.121	.254	.634	.563	.220	2.797
18.00	.008	.000	.000	.002	.000	.004	.002	.012	.015	.012	.031	.046	.145	.212	.154	.029	.671
99.00	.000	.000	.000	.000	.000	.000	.000	.000	.000	.000	.002	.019	.019	.012	.002	.000	.046
Total	5.570	2.906	4.636	5.235	6.349	5.379	4.932	5.319	7.862	8.629	7.690	6.422	6.979	8.118	7.771	5.803	100.000

NOTE: Wind directions in tables are presented in "wind from" and not "wind to" direction.

Table 4-11 (Page 2 of 2)

Ground Level Joint Frequency Distribution Table Summary

33 Foot Elevation Data

Summary Table of Percent by Speed and Class

Class / Speed	A	B	C	D	E	F	G
.45	.000	.000	.004	.002	.008	.010	.006
1.05	.021	.009	.012	.157	.355	.299	.195
2.05	.326	.202	.272	2.282	2.334	1.764	1.652
3.05	.998	.576	.798	6.133	5.350	3.267	2.808
4.05	1.247	.886	.862	6.435	4.793	3.064	2.725
5.05	1.203	.646	.852	6.116	3.880	1.772	1.037
6.05	1.201	.670	.804	5.472	3.049	.817	.251
8.05	1.629	.900	1.208	6.605	2.334	.463	.050
10.05	.775	.422	.518	2.955	1.334	.031	.002
13.05	.428	.212	.245	1.469	.438	.004	.002
18.00	.112	.062	.052	.352	.089	.004	.000
29.00	.023	.012	.000	.006	.004	.004	.000

Table 4-12

Station Characteristics

STATION: LaSalle

LOCATION: Six miles South of Marseilles, Illinois - LaSalle County

CHARATERISTICS OF ELEVATED RELEASE POINT

1) Release Height = 112.8 m[a]
2) Diameter = 5.64 m
3) Exit Speed = 14.7 m/s[a]
4) Heat Content = 0 Kcal/s[a]

CHARATERISTICS OF VENT STACK RELEASE POINT: NOT APPLICABLE

1) Release Height = _____m[a]
2) Diameter = _____m
3) Exit Speed = _____m/s[a]

CHARATERISTICS OF GROUND LEVEL RELEASE

1) Release Height = 0 m
2) Building Factor (D) = 56.4 m[a]

METEOROLOGICAL DATA

A 400 foot tower is located 725 meters Southeast of elevated release point.

Release Point	Wind Speed & Direction	Differential Temperature
Elevated	375 ft	375 – 33 ft
Vent	(N/A)	(N/A)
Ground	33 ft	200 – 33 ft

[a] Used in calculating the meteorological and dose factors in Tables 4-3, and 4-5 through 4-7.

Table 4 - 13
Dose Factors for Noble Gases

Nuclide	Beta Air Dose Factor N_i (mrad/yr per uCi/m^3)	Beta Skin Dose Factor L_i (mrem/yr per uCi/m^3)	Gamma Air Dose Factor M_i (mrad/yr per uCi/m^3)	Gamma Total Body Dose Factor K_i (mrem/yr per uCi/m^3)
Kr-83m	2.88E+02	---	1.93E+01	7.56E-02
Kr-85m	1.97E+03	1.46E+03	1.23E+03	1.17E+03
Kr-85	1.95E+03	1.34E+03	1.72E+01	1.61E+01
Kr-87	1.03E+04	9.73E+03	6.17E+03	5.92E+03
Kr-88	2.93E+03	2.37E+03	1.52E+04	1.47E+04
Kr-89	1.06E+04	1.01E+04	1.73E+04	1.66E+04
Kr-90	7.83E+03	7.29E+03	1.63E+04	1.56E+04
Xe-131m	1.11E+03	4.76E+02	1.56E+02	9.15E+01
Xe-133m	1.48E+03	9.94E+02	3.27E+02	2.51E+02
Xe-133	1.05E+03	3.06E+02	3.53E+02	2.94E+02
Xe-135m	7.39E+02	7.11E+02	3.36E+03	3.12E+03
Xe-135	2.46E+03	1.86E+03	1.92E+03	1.81E+03
Xe-137	1.27E+04	1.22E+04	1.51E+03	1.42E+03
Xe-138	4.75E+03	4.13E+03	9.21E+03	8.83E+03
Ar-41	3.28E+03	2.69E+03	9.30E+03	8.84E+03

Source: Table B-1 of Reference 6.

Table 4 - 14 (Page 1 of 3)
External Dose Factors for Standing on Contaminated Ground
DFG_{ij} (mrem/hr per pCi/ m^2)

Element	Whole Body Dose Factor	Reference	Element	Dose Factor	Reference
H-3	0.00E+00	6	Be-7	5.95E-10	99
C-14	0.00E+00	6	F-18	1.19E-08	99
Na-22	2.42E-08	99	Na-24	2.50E-08	6
Mg-27	1.14E-08	99	Mg-28	1.48E-08	99
Al-26	2.95E-08	99	Al-28	2.00E-08	99
P-32	0.00E+00	6	Cl-38	1.70E-08	99
Ar-41	1.39E-08	99	K-40	2.22E-09	99
K-42	4.64E-09	99	K-43	1.19E-08	99
Ca-47	1.14E-08	99	Sc-44	2.50E-08	99
Sc-46m	1.21E-09	99	Sc-46	2.24E-08	99
Sc-47	1.46E-09	99	Ti-44	1.95E-09	99
V-48	3.21E-08	99	Cr-51	2.20E-10	6
Mn-52m	2.79E-08	99	Mn-52	3.80E-08	99
Mn-54	5.80E-09	6	Mn-56	1.10E-08	6
Fe-52	9.12E-09	99	Fe-55	0.00E+00	6
Fe-59	8.00E-09	6	Co-57	1.65E-09	99
Co-58	7.00E-09	6	Co-60	1.70E-08	6
Ni-63	0.00E+00	6	Ni-65	3.70E-09	6
Cu-64	1.50E-09	6	Cu-67	1.52E-09	99
Cu-68	8.60E-09[1]	--	Zn-65	4.00E-09	6
Zn-69m	5.06E-09	99	Zn-69	0.00E+00	6
Ga-66	2.70E-08	99	Ga-67	1.89E-09	99
Ga-68	1.24E-08	99	Ga-72	3.00E-08	99
Ge-77	1.34E-08	99	As-72	2.23E-08	99
As-73	1.16E-10	99	As-74	9.41E-09	99
As-76	6.46E-09	99	As-77	1.79E-10	99
Se-73	1.38E-08	99	Se-75	4.98E-09	99
Br-77	3.84E-09	99	Br-80	2.01E-09	99
Br-82	3.00E-08	99	Br-83	6.40E-11	6
Br-84	1.20E-08	6	Br-85	0.00E+00	6
Kr-79	3.07E-09	99	Kr-81	1.59E-10	99
Kr-83m	1.42E-11	99	Kr-85m	2.24E-09	99
Kr-85	1.35E-10	99	Kr-87	1.03E-08	99
Kr-88	2.07E-08	99	Kr-90	1.56E-08	99
Rb-84	1.07E-08	99	Rb-86	6.30E-10	6
Rb-87	0.00E+00	99	Rb-88	3.50E-09	6
Rb-89	1.50E-08	6	Sr-85	6.16E-09	99
Sr-87m	3.92E-09	99	Sr-89	5.60E-13	6
Sr-90	1.84E-11	99	Sr-91	7.10E-09	6
Sr-92	9.00E-09	6	Y-86	4.00E-08	99
Y-87	5.53E-09	99	Y-88	2.88E-08	99
Y-90	2.20E-12	6	Y-91m	3.80E-09	6
Y-91	2.40E-11	6	Y-92	1.60E-09	6
Y-93	5.70E-10	6	Zr-95	5.00E-09	6
Zr-97	5.50E-09	6	Nb-94	1.84E-08	99
Nb-95	5.10E-09	6	Nb-97m	8.57E-09	99
Nb-97	8.48E-09	99	Mo-99	1.90E-09	6
Tc-99m	9.60E-10	6	Tc-101	2.70E-09	6
Tc-104	1.83E-08[1]	--	Ru-97	2.99E-09	99
Ru-103	3.60E-09	6	Ru-105	4.50E-09	6
Ru/Rh-106	5.76E-09[3]	6, 99	Pc-109	3.80E-10	99
Cc-109	1.12E-10	99	In-111	5.11E-09	99
In-115m	2.01E-09	99	In-116	0.00E+00[2]	--
Sn-113	1.15E-09	99	Sn-117m	1.96E-08	99
Sn-119m	7.05E-11	99	Sb-117	0.00E+00[2]	--
Sb-122	2.71E-09[1]	--	Sb-124	1.16E-08[1]	--
Sb-125	4.56E-09	99	Sb-126	7.13E-10	99
Ag-108m	1.92E-08	99	Ag-108	1.14E-09	99
Ag-110m	1.80E-08	6	Ag-111	6.75E-10	99
Te-121m	2.65E-09	99	Te-121	6.75E-09	99

Table 4 - 14 (Page 2 of 3)
External Dose Factors for Standing on Contaminated Ground
DFG_{ij} (mrem/hr per pCi/ m^2)

Element	Whole Body Dose Factor	Reference	Element	Dose Factor	Reference
Te-123m	1.88E-09	99	Te-125m	3.50E-11	6
Te-125	0.00E+00[2]	--	Te-127m	1.10E-12	6
Te-127	1.00E-11	6	Te-129m	7.70E-10	6
Te-129	7.10E-10	6	Te-131m	8.40E-09	6
Te-131	2.20E-09	6	Te-I-132	3.40E-09[5]	6
Te-134	1.05E-08	99	I-123	2.12E-09	99
I-124	1.23E-08	99	I-125	2.89E-10	99
I-130	1.40E-08	6	I-131	2.80E-09	6
I-133	3.70E-09	6	I-134	1.60E-08	6
I-135	1.20E-08	6	Xe-127	3.44E-09	99
Xe-129m	5.57E-10	99	Xe-131m	2.13E-10	99
Xe-133m	4.81E-10	99	Xe-133	5.91E-10	99
Xe-135m	5.23E-09	99	Xe-135	3.36E-09	99
Xe-137	4.26E-09	99	Xe-138	1.30E-08	99
Cs-129	3.39E-09	99	Cs-132	8.40E-09	99
Cs-134	1.20E-08	6	Cs-136	1.50E-08	6
Cs-137/Ba-137m	1.14E-08[4]	6, 99	Cs-138	2.10E-08	6
Cs-139	5.15E-09	99	Ba-131	5.74E-09	99
Ba-133m	8.10E-10	99	Ba-133	4.85E-09	99
Ba-135m	7.26E-10	99	Ba-137m	7.17E-09	99
Ba-137	0.00E+00[2]	--	Ba-139	2.40E-09	6
Ba-La-140	1.71E-08[6]	6	Ba-141	4.30E-09	6
Ba-142	7.90E-09	6	La-142	1.50E-08	6
Ce-139	2.04E-09	99	Ce-141	5.50E-10	6
Ce-143	2.20E-09	6	Ce-Pr-144	5.20E-10[7]	6
Pr-142	1.84E-09	99	Pr-143	0.00E+00	6
Nc-147	1.00E-09	6	Nc-149	5.32E-09	99
Pm-145	3.38E-10	99	Pm-148m	2.35E-08	99
Pm-148	7.22E-09	99	Pm-149	5.32E-10	99
Sm-153	8.95E-10	99	Eu-152	1.30E-08	99
Eu-154	1.41E-08	99	Eu-155	8.27E-10	99
Gc-153	1.46E-09	99	Dy-157	4.39E-09	99
Er-169	6.12E-14	99	Er-171	5.11E-09	99
Tm-170	3.41E-10	99	Yb-169	4.12E-09	99
Yb-175	4.94E-10	99	Lu-177	4.60E-10	99
Hf-181	6.67E-09	99	Ta-182	1.42E-08	99
Ta-183	2.93E-09[1]	--	W-187	3.10E-09	6
Re-188	1.89E-09	99	Os-191	9.83E-10	99
Ir-194	2.31E-09	99	Pt-195m	9.79E-10	99
Pt-197	3.57E-10	99	Au-195m	2.54E-09	99
Au-195	1.14E-09	99	Au-198	5.19E-09	99
Au-199	1.18E-09	99	Hg-197	9.33E-10	99
Hg-203	2.89E-09	99	Tl-201	1.24E-09	99
Tl-206	0.00E+00[2]	--	Tl-208	3.58E-08	99
Pb-203	3.88E-09	99	Pb-210	3.57E-11	99
Pb-212	1.91E-09	99	Pb-214	3.18E-09	99
Bi-206	3.74E-08	99	Bi-207	1.77E-08	99
Bi-214	1.71E-08	99	Ra-226	8.78E-11	99
Th-232	8.14E-12	99	U-238	7.98E-12	99
Np-239	9.50E-10	6	Am-241	3.48E-10	99

1 Valued derived by comparing the percentage and MeV of the nuclide's gammas and then comparing to Cesium-137, as a value was not available in the literature.

2 0.0 due to low yield and short half-life. A value was not available in the literature.

Table 4 - 14 (Page 3 of 3)
External Dose Factors for Standing on Contaminated Ground
DFG_{ij} (mrem/hr per pCi/ m^2)

3 Value is the sum of Ru-106 (1.50E-9) and Rh-106 (4.26E-9). The Rh-106 value is from Reference 99 and the Ru-106 value is from Reference 6.

4 Value is the sum of Cs-137 (4.20E-9) and Ba-137m (7.17E-9). The values are from references 6 and 99, respectively.

5 Value is the sum of Te-132 (1.70E-9) and I-132 (1.70E-9).

6 Value is the sum of Ba-140 (2.10E-9) and La-140 (1.50E-8) from reference 6. In Reference 6, see Table E-6.

7 Value is the sum of Ce-144 (3.20E-10) and Pr-144 (2.00E-10) from reference 6.

Note: Dose assessments for 10CFR20 and 40CFR190 compliance are made for an adult only.

Dose assessments for 10CFR50 Appendix are made using dose factors of Regulatory Guide 1.109 (Reference 6) for all age groups.

5.0 TOTAL DOSE

Radioactivity contained within tanks, pipes or other systems and contained radioactive material or waste stored on site can produce radiation at offsite locations. Annual offsite radiation doses near the stations due to such sources were judged to be negligible in comparison with applicable limits except for doses due to BWR turbine skyshine and potential doses due to radioactive waste storage facilities (excludes radioactive material storage). Changes or modifications to the power station that may impact the offsite dose through increases to the direct radiation levels need to be evaluated on a case-by-case basis and added to the Radiological Effluent Controls (RECS) to the ODCM when applicable.

5.1 Total Dose Calculation Requirements

5.1.1 Total Effective Dose Equivalent Limits; 10CFR20 and 40CFR190

LaSalle Station is required to determine the total dose to a member of the public due to all uranium fuel cycle sources in order to assess compliance with 40CFR190 as part of demonstrating compliance with 10CFR20.

The total dose for the uranium fuel cycle is the sum of doses due to radioactivity in airborne and liquid effluents and the doses due to direct radiation from contained sources at the nuclear power station. When evaluation of total dose is required for a station, the following contributions are summed:

- Doses due to airborne and liquid effluents from the station.
- Doses due to liquid effluents from nuclear power stations upstream.
- Doses due to any onsite radioactive waste storage facilities, if applicable.
- Doses due to nitrogen – 16 (N^{16}) skyshine.

10CFR20 requires compliance to dose limits expressed as "Total Effective Dose Equivalent" (TEDE). Although annual dose limits in 10CFR20 are now expressed in terms of TEDEs, 40CFR190 limits remain stated as organ dose. The NRC continues to require 10CFR50 Appendix I and 40CFR190 doses to be reported in terms of organ dose and not TEDE. Due to the fact that organ dose limits set forth in 40CFR190 are substantially lower than those of 10CFR20 (25 mrem/yr vs. 100 mrem/yr), the NRC has stated that demonstration of compliance with the dose limits in 40CFR190 will be deemed as demonstration of compliance with the dose limits of 10CFR20 for most facilities (Reference 104). In addition to compliance with 40CFR190, it may be necessary for a nuclear

power plant to address dose from on-site activity by members of the public.

5.1.2 Total Dose Calculation Methodology

There are presently two types of contained sources of radioactivity that are of concern in LaSalle Station's offsite radiological dose assessments. The first source is that due to gamma rays from nitrogen-16 (^{16}N) carried over to the turbine in BWR (boiling water reactor) steam. The second source is that due to gamma rays associated with radioactive material resident in onsite radwaste storage facilities.

Gamma radiation from these sources contributes to the total body dose (deep dose equivalent). In addition to the total body, skin and single organ dose assessments previously described, an additional assessment is required. The additional assessment addresses radiation dose due to radioactivity contained within the nuclear power station and its structures.

5.1.3 BWR Skyshine

The most significant dose component to members of the public produced by "contained sources" is nitrogen-16 (^{16}N) within the turbine building of BWRs. Although primary side shielding is around the turbine and its piping, ^{16}N gamma rays scattered by air molecules in the overhead air space above the turbine and piping cause a measurable "skyshine" radiation dose in the local power plant environs.

Equation 5-1 is used to evaluate skyshine dose. A complicating factor in the calculation is the practice at some stations of adding hydrogen to reactor coolant to improve coolant chemistry. The addition of hydrogen can increase the dose rate due to skyshine up to a factor of 10 times expected levels depending on injection rates and power levels (Reference 39). Increasing the hydrogen injection rate will increase the dose rates even further. (See Reference 102) The skyshine dose determined by Equation 5-1 depends on the following factors:

- The distance of the dose recipient location from the turbine.
- The number of hours per year that the location is occupied by a dose recipient.
- The total energy [MWe-hr] generated by the nuclear power station with hydrogen addition.
- The total energy [MWe-hr] generated by the nuclear power station without hydrogen addition.

5.2 BWR Skyshine Calculation

The contained onsite radioactivity source that results in the most significant offsite radiation levels at LaSalle Station is skyshine resulting from ^{16}N decay inside turbines and steam piping.

The ^{16}N that produces the skyshine effect is formulated through neutron activation of the oxygen atoms (oxygen-16, or ^{16}O) in reactor coolant as the coolant passes through the operating reactor core. The ^{16}N travels with the steam produced in the reactor to the steam driven turbine. While the ^{16}N is in transport, it radioactively decays with a half-life of about 7 seconds and produces 6 to 7 MeV gamma rays. Typically, offsite dose points are shielded from a direct view of components containing ^{16}N, but there can be skyshine radiation at offsite locations due to scattering of gamma rays off the mass of air above the steamlines and turbine.

The offsite dose rate due to skyshine has been found to have the following dependencies:

- The dose rate decreases as distance from the station increases.
- The dose rate increases non-linearly as the power production level increases.
- The dose rate increases when hydrogen is added to the reactor coolant, an action taken to improve reactor coolant chemistry characteristics (see Reference 39).

To calculate offsite dose due to skyshine in a given time period due to skyshine, LaSalle Station must track the following parameters:

- The total gross energy E_h produced with hydrogen being added.
- The total gross energy E_o produced without hydrogen being added.

The turbines at the site are sufficiently close to each other that energy generated by the two operating units at may be summed.

An initial estimate of skyshine dose is calculated per the following equation:

$$D^{Sky} = (K)(E_o + M_h E_h)\Sigma\{OF_K\ SF_K\ e^{-0.007R_K}\} \qquad (5\text{-}1)$$

The summation is over all locations **k** occupied by a hypothetical maximally exposed member of the public characterized by the parameters specified in ODCM Table 4-8. The parameters in Equation 5-1 are defined as follows:

D^{Ssky}	Dose Due to N-16 Skyshine	[mrem]
	Gamma External direct gamma dose (deep dose equivalent) due to BWR N-16 skyshine for the time period of interest.	
K	Empirical Constant	[mrem/(MWe-hr)]
	A constant determined by fitting data measured at the each station.	
E_o	Electrical Energy Generated Without Hydrogen Addition	[MWe-hr]
	Total gross electrical energy generated without hydrogen addition in the time period of interest.	
E_h	Electrical Energy Generated with Hydrogen Addition	[MWe-hr]
	Total gross electrical energy generated with hydrogen addition in the period of interest.	
M_h	Multiplication Factor for Hydrogen Addition	[dimensionless]
	Factor applied to offsite dose rate when skyshine is present. Hydrogen addition increases main steam line radiation levels typically up to a factor of approximately 5 (see Page 8-1 of Reference 39). M_h is station specific and is given in ODCM Table 4-8.	
OF_k	Occupancy Factor	[dimensionless]
	The fraction of time that the dose recipient spends at location **k** during the period of interest. See ODCM Table 4-8.	
SF_k	Shielding Factor	[dimensionless]
	A dimensionless factor that accounts for shielding due to occupancy of structures.	
	SF_k = 0.7 if there is a structure at location **k**;	
	SF_k = 1.0 otherwise. See ODCM Table 4-8.	

0.007	Empirical Constant	$[m^{-1}]$
	A constant determined by fitting data measured at the LaSalle station (see Reference 45).	
R_k	Distance	[m]
	Distance from the turbine to location **k**. See ODCM Table 4-8.	

5.3 Onsite Radwaste and Rad Material Storage Facilities

5.3.1 Process Waste Storage Facilities

- Interim Radwaste Storage Facility (IRSF) structure
- Concrete vaults containing radwaste liners

5.3.2 DAW Storage Facilities

- Dry Active Waste (DAW) facilities (may include Butler buildings/warehouses)
- Seavans or other temporary warehouses

5.3.3 ISFSI Facilities

- Independent spent fuel storage installation facilities.

5.4 Methodology

The external total body dose is comprised of the following parts:

1) Total body dose due to noble gas radionuclides in gaseous effluents (Section 4.2.1.1),
2) Dose due to ^{16}N skyshine (section 5.2) and other contained sources (section 5.3) and
3) Total body dose due to radioactivity deposited on the ground (Section 4.2.3.1).

The external total body dose due to radioactivity deposited on the ground is accounted for in the determination of the non-noble gas dose and is considered in section 5.5.

The total external total body dose, D^{Ex}, is given by:

$$D^{Ex} = D^{TB} + D^{Sky} + D^{OSF} \quad (5\text{-}2)$$

D^{Ex}	Total External Total Body Dose	[mrem]
	Total external total body dose due to irradiation by external sources at the location of interest.	
D^{TB}	Noble Gas Total Body Dose	[mrem]
	External total body dose due to gamma radiation from noble gas radionuclides released in gaseous effluents at the location of interest. See Section 4.2.2.3.	
D^{Sky}	Dose Due to N-16 Skyshine Total Body Dose	[mrem]
	External total body dose due to N-16 skyshine for the period and location of interest. See Equation 5-1.	
D^{OSF}	Dose From On-Site Storage Facilities	[mrem]
	External total body dose due to gamma radiation from on-site storage facilities at the location of interest. See Section 5.3.	

5.5 Total Dose

The total dose, D^{Tot}, in the unrestricted area to a member of the public due to plant operations is given by:

$$D^{Tot} = D^{Ex} + D_{aj}^{Liq} + D_{aj}^{NNG} \quad (5\text{-}3)$$

where:

D^{Tot}	Total Dose To Member of Public	[mrem]
	Total off-site dose to a member of public due to plant operations.	
D^{Ex}	Total External Total Body Dose	[mrem]

Total body dose due to external exposure to noble gases, N-16 skyshine and on-site storage facilities.

D_{aj}^{Liq} Liquid Effluent Dose [mrem]

Dose due to liquid effluents to age group **a** and organ **j**. The age group and organ with the highest dose from liquid effluents is used.

D_{aj}^{NNG} Non-Noble Gaseous Effluent Dose [mrem]

Dose due to non-noble gaseous effluents to age group **a** and organ **j**. The age group and organ with the highest dose from non-noble gas effluents is used.

5.6 COMPLIANCE TO TOTAL DOSE LIMITS

5.6.1 Total Effective Dose Equivalent Limit - 10CFR20 Compliance

Each station's RECS limits the Total Effective Dose Equivalent (TEDE) to an annual limit of 100 mrem, as required by 10CFR20.1301 (a)(1). Demonstration of compliance with the limits of 40CFR190 (per Section 4.2.2) will be considered to demonstrate compliance with the 100 mrem/year limit.

5.6.2 Dose to a MEMBER OF THE PUBLIC in the Unrestricted Area

The NRC has stated that demonstration of compliance with the limits of 40CFR190 or with the design objectives of Appendix I to 10CFR50 will be deemed to demonstrate compliance with the limits of 10CFR20.1301(a)(1). Power reactors that comply with Appendix I may also have to demonstrate that they are within the 25 mrem limit of 40CFR190 (See Reference 104).

5.6.3 Dose to a MEMBER OF THE PUBLIC in the Restricted Area

In August of 1995, a revision to 10CFR20 was implemented that changed the definition of a member of the public. As a result, for each nuclear station, estimated doses were calculated for a member of the public who enters the site boundary, but is not authorized for unescorted access to the protected area of the site and does not enter any radiologically posted areas on the site.

Realistic assumptions were made for occupancy times and locations visited while within the site boundary.

These evaluations indicate that the doses estimated for these members of the public are well within the 10CFR20 limits.

Evaluation of the 40CFR190 dose is used to demonstrate compliance to 10CFR20 and satisfy station RECS and Technical Specifications (see ODCM Part I).

5.6.4 Total Dose due to the Uranium Fuel Cycle (40CFR190)

RECS and 40CFR190 limit the annual (calendar year) dose or dose commitment to any member of the public due to releases of radioactivity and to radiation from uranium fuel cycle sources to the following:

- Less than or equal to 25 mrem to the total body.
- Less than or equal to 25 mrem to any organ except the thyroid.
- Less than or equal to 75 mrem to the thyroid.

Total Dose Components

This requirement includes the total dose from operations at the nuclear power station. This includes doses due to radioactive effluents (airborne and liquid) and dose due to direct radiation from non-effluent sources (e.g., sources contained in systems on site). It also includes dose due to plants under consideration, neighboring plants and dose due to other facilities in the uranium fuel cycle.

The operations comprising the uranium fuel cycle are specified in 40CFR190.02(b). The following are included to the extent that they directly support the production of electrical power for public use utilizing nuclear energy:

- Milling of uranium ore.
- Chemical conversion of uranium.
- Isotopic enrichment of uranium.
- Fabrication of uranium fuel.
- Generation of electricity by a light-watered-cooled nuclear power plant using uranium fuel.
- Reprocessing of spent uranium fuel.

Excluded are:

- Mining operations.
- Operations at waste disposal sites.
- Transportation of any radioactive material in support of these operations.
- The re-use of recovered non-uranium special nuclear and by-product materials from the cycle.

5.7 When Compliance Assessment is Required

Compliance with the 40CFR190 regulations is now required as part of demonstration of compliance to 10CFR20 regulations per 10CFR20.1301(d).

The dose due to the uranium fuel cycle is determined by equation 5-3

6.0 RADIOLOGICAL ENVIRONMENTAL MONITORING PROGRAM

The Radiological Environmental Monitoring Program for the environs around LaSalle Station is given in Table 6-1.

Figure 6-1 through Figure 6-3 show sampling and monitoring locations.

Table 6-1 (Page 1 of 7)
Radiological Environmental Monitoring Program

Exposure Pathway and/or Sample	Sample or Monitoring Location	Sampling or Collection Frequency	Type and Frequency of Analysis
1. Airborne Radioiodine and Particulates	a. Indicators-Near Field L-01, Nearsite No. 1, 1.5 mi NNW (2.4 km R) L-03, Onsite No. 3, 1.0 mi ENE (1.6 km D) L-05, Onsite No. 5, 0.3 mi ESE (0.5 km F) L-06, Nearsite No. 6, 0.4 mi WSW (0.6 km M) b. Indicators-Far Field L-04, Rte 170, 3.2 mi E (5.1 km E) L-07, Seneca, 5.2 mi NNE (8.4 km B) L-08, Marseilles, 6.0 mi NNW (9.7 km R) L-11, Ransom, 6.0 mi S (9.7 km J) c. Controls L-10, Streator, 13.5 mi SW (21.7 km L)	Continuous sampler operation with particulate sample collection weekly, or more frequently if required by dust loading, and radioiodine canister collection biweekly.	Radioiodine Canisters: I-131 analysis biweekly on near field and control samples[1]. Particulate Sampler: Gross beta analysis following weekly filter change[2] and gamma isotopic analysis[3] quarterly on composite filters by location on near field and control samples.[1]

Table 6-1 (Page 2 of 7)
Radiological Environmental Monitoring Program

Exposure Pathway and/or Sample	Sample or Monitoring Location	Sampling or Collection Frequency	Type and Frequency of Analysis
2. Direct Radiation	a. Indicators-Inner Ring L-101-1, 0.5 mi N (0.8 km A) L-101-2, 0.5 mi N (0.8 km A) L-102-1, 0.6 mi NNE (1.0 km B) L-102-2, 0.6 mi NNE (1.0 km B) L-103-1, 0.7 mi NE (1.1 km C) L-103-2, 0.7 mi NE (1.1 km C) L-104-1, 0.8 mi ENE (1.3 km D) L-104-2, 0.8 mi ENE (1.3 km D) L-105-1, 0.7 mi E (1.1 km E) L-105-2, 0.7 mi E (1.1 km E) L-106-1, 1.4 mi ESE (2.2 km F) L-106-2, 1.4 mi ESE (2.2 km F) L-107-1, 0.8 mi SE (1.3 km G) L-107-2, 0.8 mi SE (1.3 km G) L-108-1, 0.5 mi SSE (0.8 km H) L-108-2, 0.5 mi SSE (0.8 km H) L-109-1, 0.6 mi S (1.0 km J) L-109-2, 0.6 mi S (1.0 km J) L-110-1, 0.6 mi SSW (1.0 km K) L-110-2, 0.6 mi SSW (1.0 km K) L-111b-1, 0.8 mi SW (1.3 km L) L-111b-2, 0.8 mi SW (1.3 km L) L-112-1, 0.9 mi WSW (1.4 km M) L-112-2, 0.9 mi WSW (1.4 km M) L-113a-1, 0.8 mi W (1.3 km N) L-113a-2, 0.8 mi W (1.3 km N) L-114-1, 0.9 mi WNW (1.4 km P) L-114-2, 0.9 mi WNW (1.4 km P) L-115-1, 0.7 mi NW (1.1 km Q) L-115-2, 0.7 mi NW (1.1 km Q) L-116-1, 0.6 mi NNW (1.0 km R) L-116-2, 0.6 mi NNW (1.0 km R)	Quarterly	Gamma dose on each TLD quarterly.

Table 6-1 (Page 3 of 7)
Radiological Environmental Monitoring Program

Exposure Pathway and/or Sample	Sample or Monitoring Location	Sampling or Collection Frequency	Type and Frequency of Analysis
2. Direct Radiation (Cont'd)	b. Indicators-Outer Ring L-201-3, 4.0 mi N (6.4 km A) L-201-4, 4.0 mi N (6.4 km A) L-202-3, 3.6 mi NNE (5.8 km B) L-202-4, 3.6 mi NNE (5.8 km B) L-203-1, 4.0 mi NE (6.4 km C) L-203-2, 4.0 mi NE (6.4 km C) L-204-1, 3.2 mi ENE (5.2 km D) L-204-2, 3.2 mi ENE (5.2 km D) L-205-1, 3.2 mi ESE (5.2 km F) L-205-2, 3.2 mi ESE (5.2 km F) L-205-3, 5.1 mi E (8.2 km E) L-205-4, 5.1 mi E (8.2 km E) L-206-1, 4.3 mi SE (6.9 km G) L-206-2, 4.3 mi SE (6.9 km G) L-207-1, 4.5 mi SSE (7.2 km H) L-207-2, 4.5 mi SSE (7.2 km H) L-208-1, 4.5 mi S (7.2 km J) L-208-2, 4.5 mi S (7.2 km J) L-209-1, 4.0 mi SSW (6.4 km K) L-209-2, 4.0 mi SSW (6.4 km K) L-210-1, 3.3 mi SW (5.3 km L) L-210-2, 3.3 mi SW (5.3 km L) L-211-1, 4.5 mi WSW (7.2 km M) L-211-2, 4.5 mi WSW (7.2 km M) L-212-1, 4.0 mi WSW (6.4 km M) L-212-2, 4.0 mi WSW (6.4 km M) L-213-3, 4.9 mi W (7.9 km N) L-213-4, 4.9 mi W (7.9 km N) L-214-3, 5.1 mi WNW (8.2 km P) L-214-4, 5.1 mi WNW (8.2 km P) L-215-3, 5.0 mi NW (8.0 km Q) L-215-4, 5.0 mi NW (8.0 km Q) L-216-3, 5.0 mi NNW (8.0 km R) L-216-4, 5.0 mi NNW (8.0 km R)	Quarterly	Gamma dose on each TLD quarterly.

(Intentionally Left Blank)

Table 6-1 (Page 4 of 7)
Radiological Environmental Monitoring Program

Exposure Pathway and/or Sample	Sample or Monitoring Location	Sampling or Collection Frequency	Type and Frequency of Analysis
2. Direct Radiation (Cont'd)	c. Other Indicators One at each of the airborne location given in part 1.a and 1.b. d. Controls One at each airborne control location given in part 1.c.		

Table 6-1 (Page 5 of 7)
Radiological Environmental Monitoring Program

Exposure Pathway and/or Sample	Sample or Monitoring Location	Sampling or Collection Frequency	Type and Frequency of Analysis
3. Waterborne			
a.. Ground/Well	a. Indicators L-27, LSCS Onsite Well at Station L-28, Marseilles Well, 7.0 mi NW (11.3 km Q)	Quarterly	Gamma isotopic[3] and tritium analysis quarterly.
b. Drinking Water	There is no drinking water pathway within 6.2 mi (10 km) downstream of station.		
c. Surface Water	a. Indicator L-40, Illinois River downstream, 5.2 mi NNW (8.4 km R)	Weekly grab sample	Gross beta and gamma isotopic analysis[3] on monthly composite; tritium analysis on quarterly composite.
d. Control	a. Control L-21, Illinois River at Seneca, 4.0 mi NE (6.4 km C)	Weekly grab sample	Gross beta and gamma isotopic analysis[3] on monthly composite; tritium analysis on quarterly composite.
e. Sediments	a. Indicators L-40, Illinois River downstream, 5.2 mi NNW (8.4 km R) L-41, Illinois River downstream 4.6 mi NNW (7.4 km A)	Semiannually	Gamma isotopic analysis[3] semiannually.

Table 6-1 (Page 6 of 7)
Radiological Environmental Monitoring Program

Exposure Pathway and/or Sample	Sample or Monitoring Location	Sampling or Collection Frequency	Type and Frequency of Analysis
4. Ingestion			
a. Milk	a. Indicators At the time of this revision, there are no dairies within 6.2 miles which consistently produce milk. b. Controls L-42, Biros Dairy, 14.2 mi E (22.9 km E)	Biweekly: May through October; monthly: November through April	Gamma isotopic[3] and I-131 analysis[4] biweekly May through October, monthly November through April.
b. Fish	a. Indicator L-35, Marseilles Pool of Illinois River, 6.5 mi NW (10.5 km Q) L-34, LaSalle Lake 2 mi E (3.2 km E) b. Control L-36, Illinois River upstream of discharge, 4.3 mi NNE (6.9 km B)	Two times annually	Gamma isotopic analysis[3] on edible portions of each
c. Food Products	a. Indicators Two samples from each of the four major quadrants within 6.2 miles of the station, if available. Sample locations for food products may vary based on availability and therefore are not required to be identified here but shall be taken. b. Controls Two samples within 9.3 to 18.6 miles of the station, if available.	Annually	Gamma isotopic analysis[3] and I-131 analysis each sample.

Table 6-1 (Page 7 of 7)
Radiological Environmental Monitoring Program

[1] Far field samples are analyzed when near field results are inconsistent with previous measurements and radioactivity is confirmed as having its origin in airborne effluents released from the station, or at the discretion of the ODCM Specialist.

[2] Airborne particulate sample filters shall be analyzed for gross beta radioactivity 24 hours or more after sampling to allow for radon and thoron daughter decay. If gross beta activity in air particulate samples is greater than 10 times the yearly mean of control samples, gamma isotopic analysis shall be performed on the individual samples.

[3] Gamma isotopic analysis means the identification and quantification of gamma emitting radionuclides that may be attributable to the effluents from the station.

[4] I-131 analysis means the analytical separation and counting procedure are specific for this radionuclide.

Figure 6-1
Fixed Air Sampling Sites and Outer Ring TLD Locations

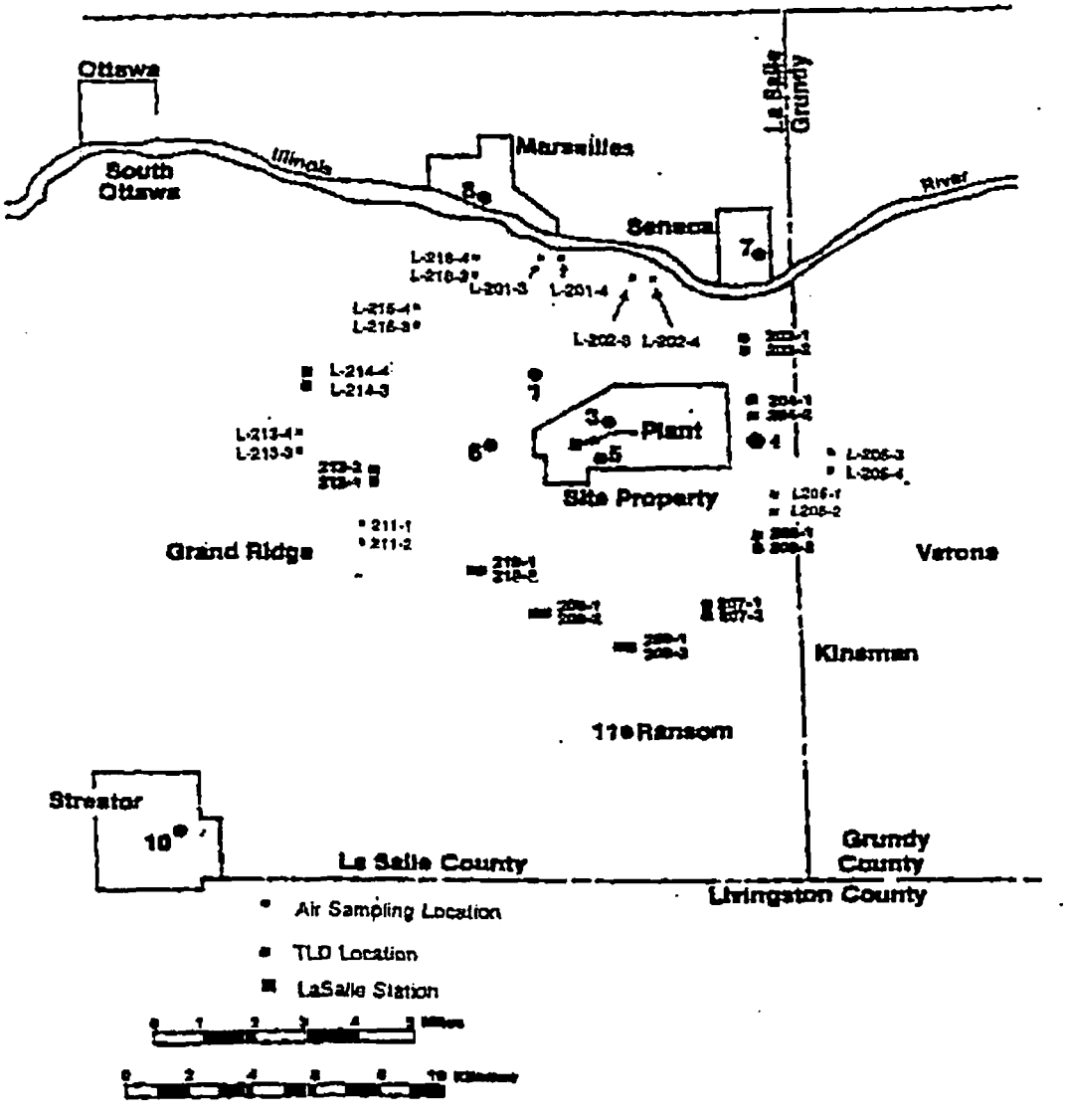

Figure 6-2
Inner Ring TLD Locations

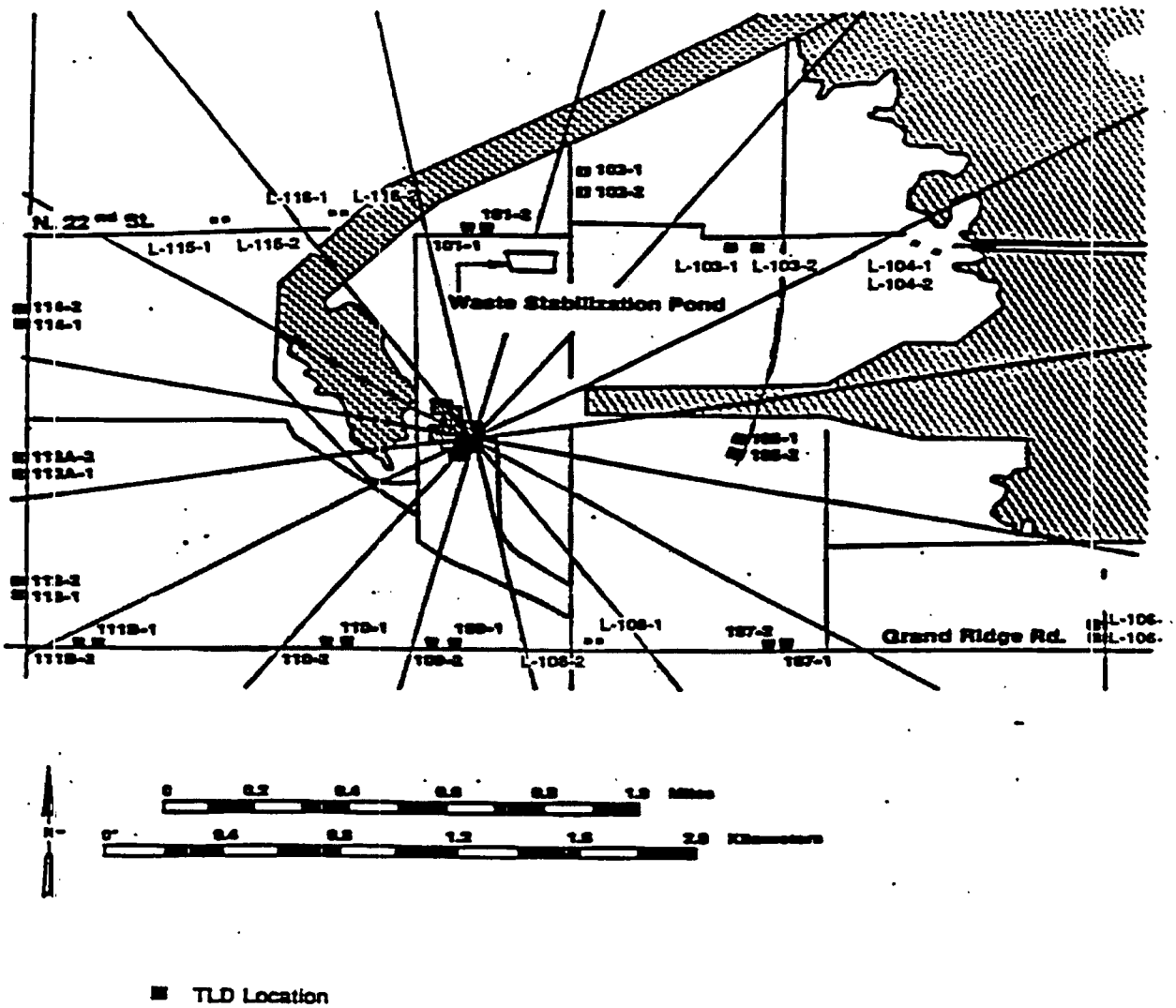
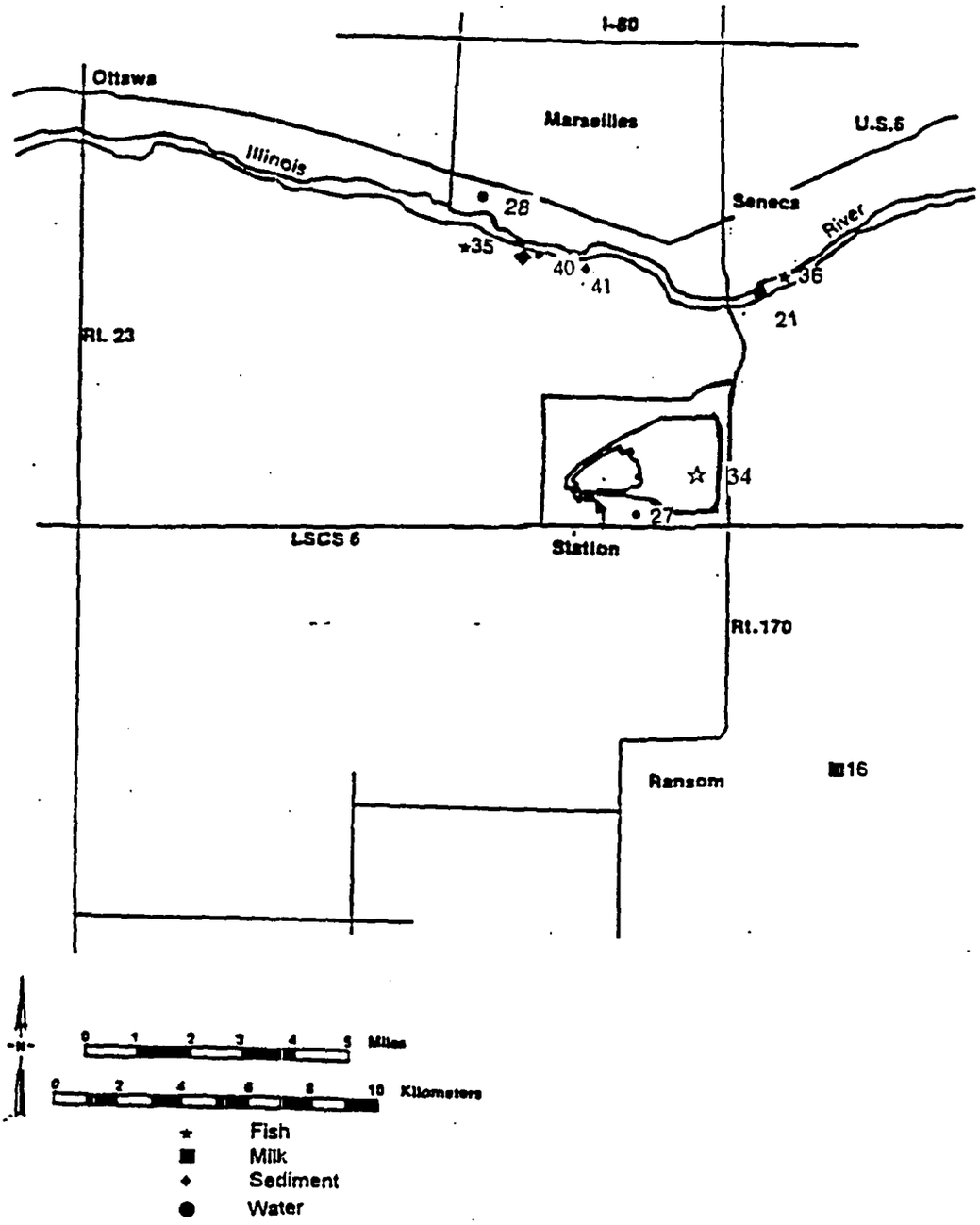
Figure 6-3
Ingestion and Waterborne Exposure Pathway Sample Locations