Boiling Water Reactor
GE BWR/4
Technology Advanced Manual

Chapter 6.0

BWR Differences

Table of Contents

List of Tables

6.0 BWR DIFFERENCES

The BWR Differences chapter is provided to give the student some insight into the major differences between the various BWR product lines. Table 6.0-1 has been developed to allow comparisons of various BWR functions for the product lines BWR/2 through BWR/6. The figures in this chapter illustrate most of the more important differences indicated in the tables.

6.0.1 Reactor Vessels

The reactor vessel consists of the reactor pressure vessel, the components that support and contain the core, and the components that provide flow paths and separation for steam and water. This section points out the differences in vessel design and construction pertaining to various flow paths, ability to flood the core following a loss of coolant accident, and emergency core cooling system penetrations.

6.0.2 Recirculation and Recirculation Flow Control

All operating BWRs use forced circulation of coolant, and hence all BWR reactor vessels recirculation systems support this concept. The way that forced circulation is achieved involves differences in the basic design. The BWR/2 design has no jet pumps inside the reactor vessel but has five external recirculation loops to provide the required flow. The BWR/3 through BWR/6 designs do have jet pumps internal to the reactor vessel and have only two external recirculation loops. The jet pumps used in the BWR/5 and BWR/6 product lines use a five nozzle design which is more efficient than the single nozzle design used in the BWR/3 and BWR/4 product lines. In the BWR/2, BWR/3 and BWR/4 product lines core flow is controlled by changing the speed of the variable speed recirculation pumps in each of the recirculation loops.

In the BWR/5 and BWR/6 product lines core flow is controlled by changing the dual speed recirculation pumps from one discreet speed to another and by throttling a variable position flow control valve. The recirculation flow control system for all product lines allows individual or ganged control of each flow control device. The BWR/5 and BWR/6 product lines have an additional controller, a flux controller, that uses the average power range monitoring system as an input to maintain a desired power level with core flow.

6.0.3 Reactor Isolation Pressure and Inventory Control

In the event the reactor becomes isolated from its heat sink some component or system must control reactor vessel pressure and inventory. All BWR plants have safety relief valves (SRVs) to provide over pressure protection, and hence control reactor pressure. Some BWR facilities have systems which can control pressure without requiring the use of the SRVs. All BWR facilities have a means of providing high pressure makeup water to the reactor vessel to compensate for inventory loss via the pressure control method.

In the case of the BWR/2 product line and certain plants of the BWR/3 product line, both of the isolation functions are carried out by a single system called the isolation condenser System. The isolation condenser system draws off reactor steam, condenses the steam in a condenser, and returns the resultant condensate to a recirculation system suction line. By conserving inventory, this system eliminates the need for additional sources of high pressure makeup.

All BWRs of other product lines use SRVs for pressure control and the reactor core isolation cooling system to provide high pressure makeup water to the reactor vessel. Additionally, some BWR/4 product line plants, all BWR/5, and all BWR/6 product line plants have another option available. The steam condensing mode of the residual heat removal system can be used for reactor pressure control. In this mode, reactor steam is reduced in pressure and then condensed in the RHR heat exchanger where the resultant condensate is directed to the RCIC pump suction.

6.0.4 Emergency Core Cooling Systems

The ECCS package provided for a particular product line is dependent primarily on the vintage of the plant. All BWR product lines have high pressure and low pressure ECCSs. The BWR/2 product line high pressure ECCS consists of the isolation condenser system and the automatic depressurization system. Low pressure ECCS consists of a core spray system.

The BWR/3 product line high pressure ECCS pumping system consists of either a feedwater coolant injection system or a high pressure coolant injection system. The BWR/3 low pressure ECCS consists of two core spray loops and two low pressure coolant injection loops - either as a separate system or as part of the residual heat removal system.

The BWR/4 product line ECCS high pressure pumping consists of a high pressure coolant injection system that delivers its flow to the vessel annulus. The low pressure ECCSs consists of two core spray system loops and two or four LPCI loops.

The BWR/5 and BWR/6 product lines have the same ECCS package. The ECCS high pressure pumping system consists of a high pressure core spray system. The low pressure ECCSs consists of one low pressure core spray system loop and three LPCI loops. The LPCS system is similar to a single core spray loop of the earlier BWR/4 product line. The three LPCI loops deliver low pressure flooding water directly inside the core shroud.

6.0.5 Containment and Combustible Gas Control

There are three containment packages used in the various BWR product lines. All BWR/2, BWR/3, and early model BWR/4 product line plants have the Mark I Containment. Later model BWR/4 and all BWR/5 product line plants have the Mark II Containment. All BWR/6 product line plants have the Mark III Containment. All three containments have the pressure suppression feature.

The Mark I Containment consists of a drywell (in the shape of an inverted light bulb), a suppression chamber (in the shape of a toroid), and a network of vents which extend radially outward and downward from the drywell to the suppression chamber. The drywell and suppression have the same design pressure.

The Mark II Containment is sometimes referred to as an over-under containment. It consists of a drywell (in the shape of a truncated cone) a suppression chamber directly below the drywell (in the shape of a right circular cylinder), and a network of vertical vents extending downward from the drywell to the suppression chamber. The drywell and suppression chamber have the same design pressure.

The Mark III Containment employs the construction simplicity of a dry containment while retaining the advantage of a pressure suppression type containment. The Mark III Containment consists of a drywell (shaped like a right circular cylinder), a suppression pool (most of which is outside but some of which is inside the drywell), a weir wall (that bounds the suppression pool on the inside of the drywell), and the containment vessel which is cylindrical with a domed head, completely surrounds the drywell and suppression pool, and is both a pressure boundary and a fission product boundary.

In the Mark I and Mark II Containment designs, short term control of post LOCA hydrogen gas concentration is accomplished by inerting the primary containment with nitrogen gas for normal plant operation. The nitrogen gas is used to displace the oxygen in the air and to prevent an explosive mixture of hydrogen and oxygen from forming. Long term control of post LOCA hydrogen gas concentration is accomplished by adding additional nitrogen gas and then venting the primary containment to the standby gas treatment system. There are also hydrogen recombiners present in the BWR/5 design. They recombine hydrogen gas and oxygen gas into water vapor.

In the Mark III Containment design, short term control of post LOCA hydrogen gas is first achieved because of the tremendously larger volume of the containment vessel (as compared to the Mark I or Mark II designs). When drywell hydrogen gas concentration starts to approach the flammability limit, drywell mixing compressors are started. They purge the hydrogen gas from the drywell into the containment. Long term control of post LOCA hydrogen gas concentration is accomplished by hydrogen igniters, which are distributed glow plugs similar to the ones used in PWR ice condenser containments.

Table 6.5-1 presents a comparison of the three BWR containment types with regard to the same or similar parameters.

6.0.6 Rod Control

Rod control for plants of the BWR/2 through BWR/5 product lines consists of a reactor manual control system (RMCS). The RMCS uses relays, contacts, and timers. The BWR/5 RMCS is somewhat of a hybrid between the system used in BWR/2 through BWR/4 and the BWR/6. The system used in the BWR/6 product line is called the Rod control and information system which is a solid state time multiplexing system. The RMCS for the BWR/2 through the BWR/5 product lines allows movement of only a single control rod at a time. The BWR/6 RC&IS allows movement of control rods one at a time or in a gang mode of up to four at a time.

6.0.7 Balance of Plant Systems

The balance of plant systems used in the various BWR product lines are too numerous to cover in detail. Section 6.7 deals with the two most common types of condensate and feedwater systems and the feedwater control system.

6.0.8 Safety Relief Valves

Safety relief valves prevent the over pressurization of the nuclear process barrier from abnormal operation transients. The various safety relief valves used through out the BWR product lines are discussed in this section.

Table 6.0-1 BWR Differences

Function	BWR/2	BWR/3	BWR/4	BWR/5	BWR/6
Forced Circulation	5 recirc loops; no jet pumps	2 recirculation loops; 20 jet pumps	2 recirculation loops; 20 jet pumps	2 recirculation loops; 20 jet pumps	2 recirculation loops; 20 or 24 jet pumps
Internal Pump Design	NONE	Single nozzle jet pump	Single nozzle jet pump	Five nozzle jet pump	Five nozzle jet pump
Flow Control Method	Variable Speed Pumps	Variable Speed Pumps	Variable Speed Pumps	2 speed pumps and FCV	2 speed pumps and FCV
Reactor Isolation Pressure Control	Isolation Condenser and SRVs	Isolation Condenser and SRVs	All use SRVs Some have Steam Condensing Mode of RHR	All use SRVs Some have Steam Condensing Mode of RHR	All use SRVs Some have Steam Condensing Mode of RHR
Reactor Isolation Inventory Control	Isolation Condenser	Isolation Condenser	RCIC	RCIC	RCIC
Shutdown Cooling	Shutdown Cooling System	Shutdown Cooling system or MODE of RHR system	Shutdown Cooling MODE of RHR system	Shutdown Cooling MODE of RHR system	Shutdown Cooling MODE of RHR system
Containment Spray and Cooling	Containment Spray System	MODE of LPCI or RHR System	MODE of RHR system	MODE of RHR system	MODE of RHR system
ECCS High Pressure Pumping	Feedwater Pumps	Feedwater Pumps or HPCI	HPCI	HPCS	HPCS
ECCS High Pressure Pumping Delivery Point	Vessel annulus via feedwater sparger	Vessel annulus via feedwater sparger	Vessel annulus via feedwater sparger	Directly above core outlet (one spray ring)	Directly above core outlet (one spray ring)
ECCS High Pressure Pump Type	Normal RFPs with and without emergency power	Normal RFPs or Turbine Driven HPCI	Turbine Driven	Motor Driven	Motor Driven

Table 6.0-1 BWR Differences

Function	BWR/2	BWR/3	BWR/4	BWR/5	BWR/6
ECCS Blowdown	ADS	ADS	ADS	ADS	ADS
ECCS Low Pressure Spray	Two core spray (independent) loops	Two core spray (independent) loops	Two core spray (independent) loops	One LPCS loop	One LPCS loop
ECCS Low Pressure Flooding	NONE	LPCI sys, 2 loops; or LPCI MODE of RHR	LPCI MODE of RHR, 2 independent loops *(2 plants have 4 loops)*	LPCI MODE of RHR, 3 independent loops	LPCI MODE of RHR, 3 independent loops
ECCS Low Pressure Flooding Deliver point		Recirculation pump discharge pipe	Recirculation pump discharge pipe or inside shroud (core region)	Inside core shroud , core region	Inside core shroud , core region
Standby Coolant Supply	UHS to condenser and then feedwater to vessel	From UHS to Feedwater or RHR	Form UHS to RHR	Form UHS to RHR	Form UHS to RHR
Containment Package	Mark I	Mark I	Mark I or II	Mark II	Mark III
Primary Containment Fission Product Barrier	Drywell and Suppression Pool	Drywell and Suppression Pool	Drywell and Suppression Pool	Drywell and Suppression Pool	Containment
Hydrogen Control Short Term	Nitrogen inerting during normal operation	Nitrogen inerting during normal operation	Nitrogen inerting during normal operation	Nitrogen inerting during normal operation	Larger volume; mixing compressors
Hydrogen Control Long Terms	Nitrogen inerting; venting to SGTS	Nitrogen inerting; venting to SGTS	Nitrogen inerting; venting to SGTS; recombiners	Nitrogen inerting; venting to SGTS; Recombiners	Hydrogen recombiners; hydrogen igniters
Rod Control	RMCS; one rod at a time; standard relays and timer	RMCS; one rod at a time; standard relays and timer	RMCS; one rod at a time; standard relays and timer or solid state	RMCS; one rod at a time; solid state	RC&IS; up to four rods at a time; Solid state

Table of Contents

List of Figures

6.1 REACTOR VESSELS

Learning Objectives :

After studying this section, you should be able to:

1. Describe the internal components and their arrangement that may or may not provide 2/3 core coverage capability following a LOCA.

6.1.1 Introduction

The reactor vessels utilized for a particular product line are dependent on the vintage of the plant, core cooling regulations, type of recirculation system, and technology used during its period of design. The reactor vessel houses the reactor core, serves as part of the reactor coolant boundary, supports and aligns the fuel and control rods, provides a flow path for the circulation of coolant past the fuel, removes moisture from the steam exiting the reactor vessel, limits the downward control rod motion following a postulated failure of a control rod drive housing, and in all cases except the BWR/2 product line provides an internal refloodable volume following a loss of coolant accident.

6.1.2 BWR/2 Reactor Vessel

The BWR/2 reactor vessel, Figure 6.1-1, is an insulated pressure vessel mounted vertically within the drywell and is comprised of a cylindrical shell with an integral hemispherical bottom head. The top head is also hemispherical but is removable to facilitate refueling operations. The base material of the vessel is high strength alloy carbon steel. All internal surfaces including the shell, heads, flanges and attachments are clad with Type 304 stainless steel to a thickness of 0.25 inches. Small nozzles which are not practicable to clad internally with stainless overlay are solid nickel-chromium-iron alloy.

The vessel head is attached to the vessel shell by sixty four six inch diameter studs that are threaded into bushings in the vessel flange. Spherical washers and closure nuts are match marked in sets of two and are used in sets. To secure the head to the vessel shell, the studs are elongated by hydraulic stud tensioners which permit the nuts to be turned while the stud is under tension.

Leakage of radioactive coolant and steam between the mating surfaces of the vessel and closure head flanges to atmosphere is contained by two self-energizing O-ring gaskets. These silver plated and polished Ni-Cr-Fe (Inconel) O-rings are approximately 0.50 inches in diameter. The O-rings are designed to have no detectable leakage through the inner or outer member during any reactor operating condition.

6.1.2.1 Vessel Internals

The major reactor vessel internal components included in this discussion are the core support assembly, core shroud, diffuser, core plate, upper core grid, core spray system sparger, feedwater sparger, steam separators and dryers.

Core Support Assembly

The core support assembly consists of a stainless steel forged ring that is welded to an Inconel segment. The Inconel segment is welded to the lower shell of the vessel. The core support assembly supports the core shroud and separates the recirculation system suction from its discharge.

Core Shroud

The core shroud is supported by the core support assembly. The core shroud along with the core support assembly forms a 17 inch water annulus inside the reactor vessel wall. In addition, a flow barrier is provided by the lower portion of the shroud and the support assembly. This conical skirt, welded to the reactor vessel wall, effectively separates the recirculation inlet core flow from the downcomer annulus flow.

Diffuser

The vessel diffuser is a cylindrical shell hanging downward from a shelf provided by a ring girder. The diffuser contains hundreds of 1.25 inch diameter holes and is approximately eight feet in height. The diffuser serves a two fold purpose; it prevents direct contact of the recirculation flow to the control rod guide tubes and provides a uniform flow of coolant below the fuel orifice region.

Core Plate

The core plate is provided to laterally guide and align the control rod guide tube and fuel support castings. Twelve peripheral fuel assemblies, located outside the control rod pattern are supported vertically by the core plate. These peripheral fuel assemblies rest in a fuel support piece that is welded to the core plate. The core plate prevents recirculation flow from bypassing the fuel assemblies by directing the flow into the control rod guide tube.

Upper Core Grid

The upper core grid or top guide is mounted and supported by twelve brackets inside the shroud. Eight bolts are provided to laterally position and level the top guide. Four hold down bolts attach the top guide to the ledge of the core shroud.

Core Spray Sparger

Two independent core spray loops are installed in the vessel above the upper core grid (top guide) and within the core shroud. The loops are connected to the Core Spray System which is used for core cooling under loss of coolant accident conditions.

Feedwater Sparger

The feedwater spargers are mounted to the reactor vessel wall in the upper part of the downcomer or annulus region. The spargers, each supplied by one of the two feedwater nozzles, complete a half circle of the vessel interior and discharges water radially inward. A number of 1-inch holes in each sparger permits the cooler feedwater to mix with downcomer recirculation flow before coming in contact with the vessel.

Steam Separator

The steam separator assembly consists of the shroud head and an array of standpipes with steam separators located above each standpipe. The shroud head mates with the core shroud and is bolted to it. The shroud head is a dished unit and forms the cover of the core discharge plenum region. A metal to metal contact seals the separator assembly and the core shroud flange. Operation of the steam separators is identical to that of the separators covered in the systems manual.

Steam Dryer

The steam dryers are required to dry a mass flow of wet steam at 1015 psia and 10 percent moisture by weight to a mass flow of dry steam at 1015 psia and 0.10 percent moisture by weight. The mass flow of steam ranges from zero to 6,933,000 pounds per hour. The dryer assembly is supported by four internal vessel pads. Vertical guides inside the vessel provide alignment during installation, four hold down bolts hold the unit in position.

The dryer assembly is mounted in the vessel above the steam separator assembly and forms the top and sides of the wet steam plenum. Steam that has passed through the separators enters the chevron-type dryer units. A series of troughs and tubes remove the remaining moisture which flows into the downcomer annulus.

6.1.3 BWR/3 and BWR/4 Reactor Vessels

The introduction of the BWR/3 product line (Figure 6.1-2) produced major changes in the reactor vessel design. One of the more important changes was the elimination of the five recirculation loop concept in favor of two loops with jet pumps mounted internal to the reactor vessel. The elimination of five loops removed the recirculation system discharge nozzle penetrations in the vessel bottom head region and reduces the probability of a large break loss of coolant accident. The installation of the jet pumps provides a standpipe effect so the core can be reflooded following a loss of coolant accident and allows better communication between the annulus region and the core region without the need of the recirculation loops.

The BWR/3 product line vessel also included modifications to the feedwater spargers, steam dryers, vessel head, and the cladding overlay. The feedwater spargers increased in number from two to four and contain converging nozzles for better efficiency and extended sparger life. The dryer assembly retained the same operating

principle but, added more drying units and was no longer bolted down. The vessel head gained two new penetrations (head spray and spare), in addition to holddown pads to prevent the steam dryer from lifting during system operation. The vessel upper head and nozzle penetration are not clad because it is not needed and the cladding tended to propagate cracks into the base metal on nozzle penetrations.

6.1.3. BWR/4 Advanced Vessel Design

Two BWR/4 product line vessels favor the later BWR/5 and BWR/6 design in that they contain separate and independent penetrations for the Low Pressure Coolant Injection (LPCI) mode of the Residual Heat Removal System. The LPCI injection lines penetrate the vessel at four different locations and continue until they penetrate the core shroud.

6.1.4 BWR/5 and BWR/6 Reactor Vessel

The BWR/5 product line (Figure 6.1-3) produced changes in the vessel upper head, steam separator and dryer assemblies, instrumentation quadrant taps, and LPCI injection penetrations. The upper vessel head penetrations was reduced from three to only two, one spare and one multipurpose to perform the functions previously performed by two separate penetrations. The steam separator assembly acquired more separating units as did the dryer assembly. The dryer assembly also under went holddown changes to eliminate the problem of ensuring it was disconnected from the core shroud prior to lifting. The LPCI injection penetrations were reduced from four to three.

6.1.5 Summary

The reactor vessels utilized for a particular product line are dependent on the vintage of the plant, core cooling regulations, type of recirculation system, and technology used during its period of design. The reactor vessel houses the reactor core, serves as part of the reactor coolant boundary, supports and aligns the fuel and control rods, provides a flow path for the circulation of coolant past the fuel, removes moisture from the steam exiting the reactor vessel, limits the downward control rod motion following a postulated failure of a control rod drive housing, and in all cases except the BWR/2 product line provides an internal refloodable volume following a loss of coolant accident.

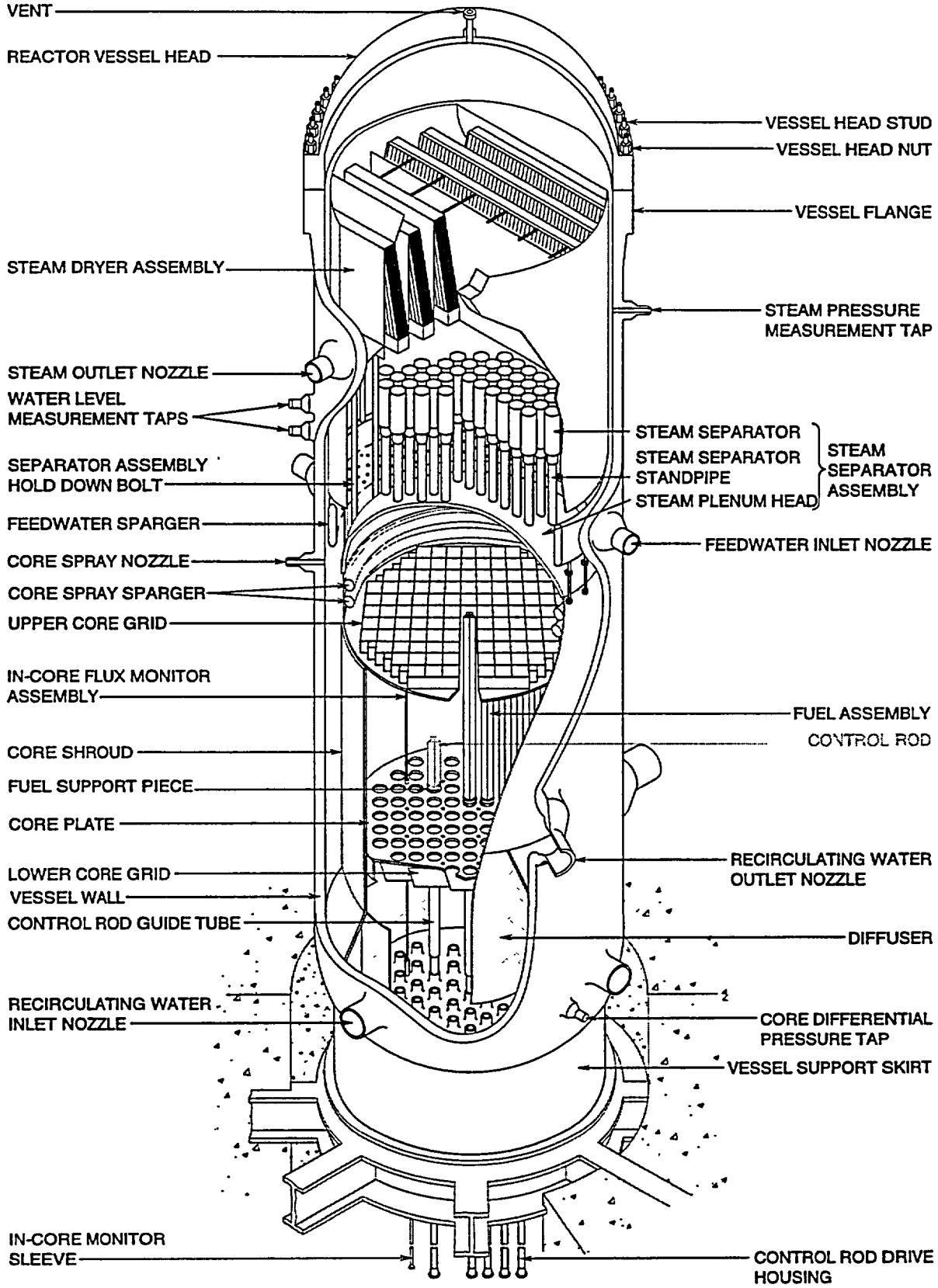

Figure 6.1-1 BWR/2 Reactor Vessel

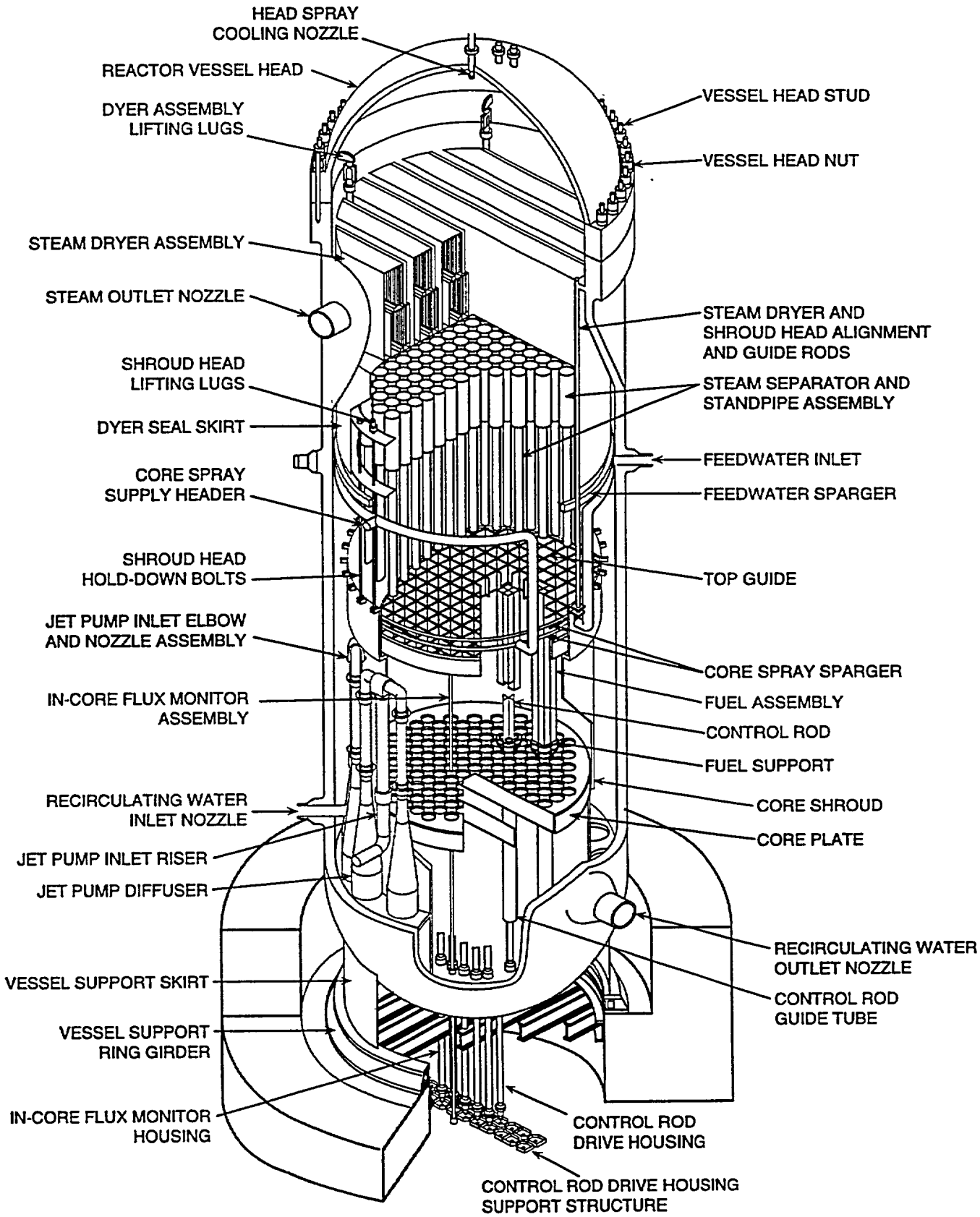

Figure 6.1-2 Reactor Vessel (BWR/3 or BWR/4)

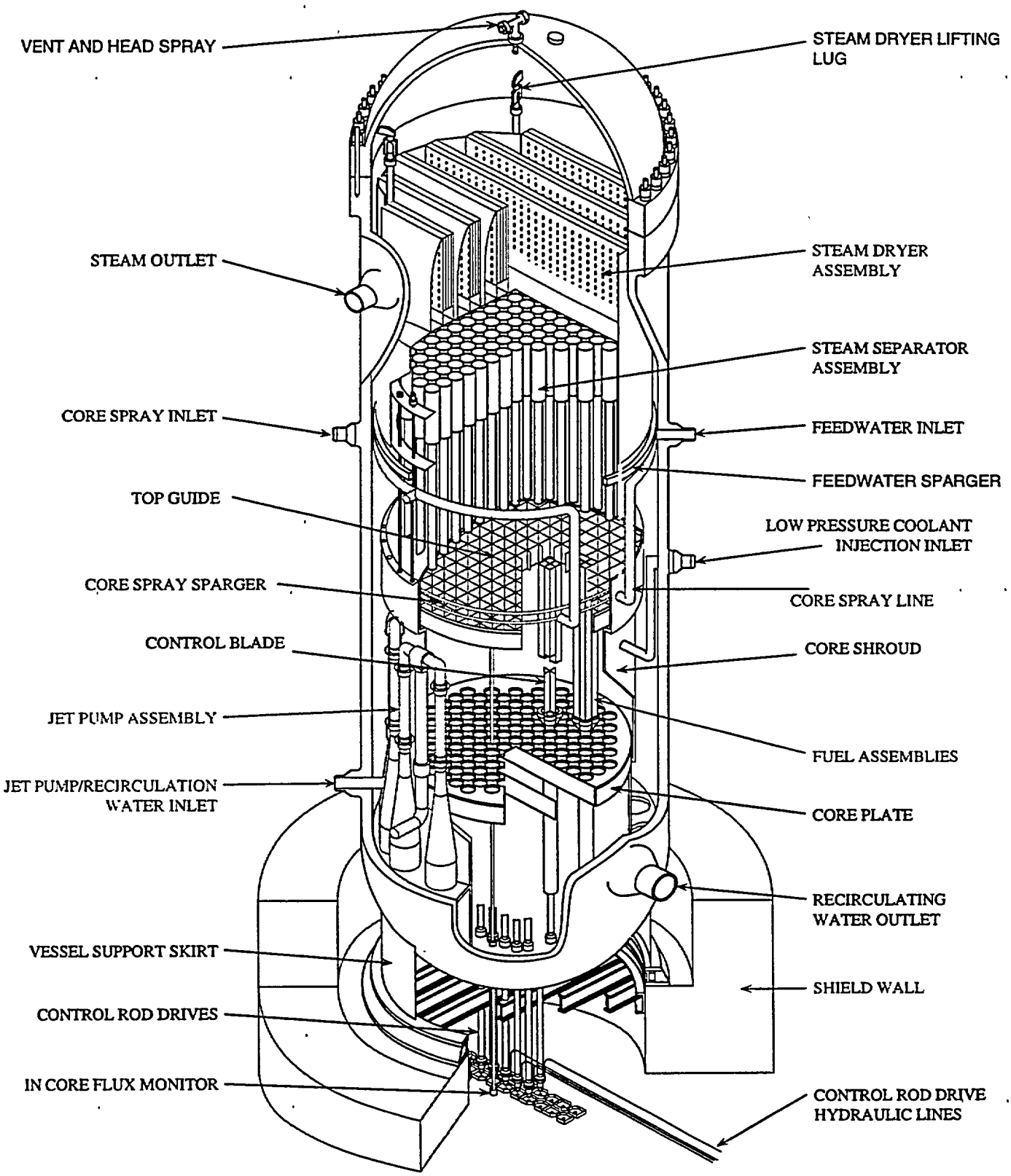

Figure 6.1-3 Reactor Vessel (BWR/5 OR BWR/6)

Table of Contents

List of Figures

6.2 RECIRCULATION AND FLOW CONTROL SYSTEMS

Learning Objectives :

1. Explain the three different types of recirculation loops.
2. Explain valve vs. pump flow control.
3. Explain the thermal shock limitation.
4. Explain the power/flow map.

6.2.1 Introduction

The Recirculation System provides variable forced circulation of water through the core, thereby allowing a higher power level to be achieved than with natural circulation alone. The Recirculation System, in conjunction with the Recirculation Flow Control System, provides a relatively rapid means of controlling reactor power over a limited range by adjusting the rate of coolant flow through the core.

Control rod movement and recirculation flow adjustment are the two means of controlling reactor power under normal operating conditions. Control rod motion produces local changes in reactivity and neutron flux, while recirculation flow adjustments produce changes in flux across the core without significantly affecting local to average flux values.

An increase in recirculation flow produces an increase in total core flow, or an increase in mass flow rate of subcooled fluid entering the core. This increase in flow suppresses boiling since additional heating is required to reach saturation. The boiling boundary moves upward and the void volume decreases. The resulting positive reactivity increases core power. Power continues to increase until the boiling boundary and void fraction are restored and core reactivity returns to zero. The reverse mechanism occurs on a recirculation flow decrease. In both cases, void fraction changes are transient and void fraction is eventually returned to near the beginning value. The doppler coefficient produces the slight difference in void fraction because of changes in fuel temperature.

6.2.2 BWR/2

The Recirculation System for BWR/2 product lines, Figure 6.2-1, consists of five parallel piping loops, designated A through E. The pumping loops take suction from the reactor vessel downcomer annulus and discharge to the lower head area beneath the fuel region. The operator adjusts recirculation flow rate by varying the voltage and frequency output of motor generator sets which supply power to the recirculation pump motors.

6.2.2.1 Recirculation System

The five recirculation pumps, arranged in parallel, take suction from the reactor vessel downcomer annulus through individual outlet nozzles and motor operated suction valves. Pump discharge flow passes through individual motor operated discharge isolation valves and reenters the reactor vessel through five inlet nozzles. A 2 inch line containing a motor operated valve bypasses each pump discharge valve. This path allows a minimum flow during pump starting and provides a small backflow to keep an idle loop warm.

All five recirculation loops are normally in operation, with the pumps at the same speed. Under certain conditions, plant operation is permitted with one loop idle, but not isolated.

Various other plant systems that connect to the recirculation system include:

- A 10 inch line joins loop A upstream of the pump suction valve to provide a return flow path to the reactor vessel from isolation condenser A.

- A 3/4 inch line taps off loop A upstream of the pump suction valve to provide a flow path to the sampling system.
- Two 6 inch lines connect to loop B to provide supply and return flow for the Reactor Water Cleanup System.
- Two 14 inch lines connect to loop E to provide supply and return flow for the Shutdown Cooling System.
- A 10 inch line joins the 14 inch shutdown cooling supply line to provide a return flow path to the reactor vessel from isolation condenser B.

The major components of the Recirculation System are discussed in the paragraphs that follow.

Recirculation Pumps

The recirculation pumps provide the driving head for the recirculation system. Each pump is a vertical, single stage, centrifugal pump driven by a 1000 HP, variable speed induction motor. The pumps are powered from individual M/G sets which supply a variable frequency and voltage (11.5 - 57.5 Hz and 460-2300 volts) to change pump speed and flow rate. The flow rate per pump varies from a minimum of 6400 gpm to a maximum of 32,000 gpm.

Each recirculation pump is equipped with a dual seal assembly which contains reactor water within the pump casing and associated controlled leakage lines and allows zero leakage to the primary containment. The assembly consists of two seals built into a cartridge that can be replaced without removing the motor from the pump. Each seal can withstand full pump design pressure so that either will adequately limit leakage if the other fails. A breakdown bushing in the pump casing limits leakage to approximately 60 gpm if both seals fail.

During normal operation, both seals share the sealing work load of the assembly, with approximately a 500 psid pressure drop across each seal. Thus, seal cavity #1 is at reactor pressure and seal cavity #2 is at one half of reactor pressure. This arrangement is maintained by two internal restricting orifices which control the leakage between the seal cavities, and from cavity #2 to the drywell equipment drain tank (DWEDT), at approximately 0.5 gpm. A flow switch in the controlled leakage line actuates an alarm on seal failure (high flow) or orifice plugging (low flow).

The seal cavities require forced cooling to remove heat generated by friction between the sealing surfaces. The Reactor Building Closed Cooling Water System supplies approximately 25 gpm of water to a heat exchanger surrounding the seal cartridge. Reactor water from the pump cavity passes through a hole in the main pump impeller, around the hydrostatic bearing, and through the shaft to casing clearance to an auxiliary impeller located just below the seal cartridge. The auxiliary impeller forces the seal water through the tubes of the heat exchanger.

BWR/2 Recirculation Flow Control System

Each recirculation pump is hardwired to an associated recirculation motor/generator (M/G) set stator. (Figure 6.2-2) Since the pumps are driven by an induction motor, pump speed and resulting recirculation loop flow are determined by generator speed (frequency).

Each M/G set consists of a constant speed drive motor, a fluid coupler, a variable speed generator. The speed of the generator is determined by the generator load and the amount of coupling between the drive motor and generator.

Scoop tubes vary the volume of oil in the hydraulic coupler, and thus the amount of torque transmitted from the drive motors to the generators. As a scoop tube is inserted, the volume of oil in the

coupler decreases, and both torque transmission and generator speed decrease. Pump speed also decreases, since the pump operates synchronously with the generator. Likewise, oil volume, generator speed and pump speed all increase as a scoop tube is retracted.

The flow control system contains one speed control loop for each of the five recirculation pumps. Manual speed demand signals are sent to the five controllers from two sources during normal operation:

- In the master/manual mode of operation, a single speed demand signal originating in the master controller passes through each M/A transfer station to the speed controllers. All recirculation pumps operate at approximately the same speed, as determined by the master controller. The automatic position of the master controller is not used and the controller is pinned in the manual position.

- In the loopn manual mode of operation, the master controller is disconnected, and pump speed is controlled individually by speed demand signals originating in each M/A transfer station.

The speed controllers compare speed demand signals from the M/A transfer stations to speed feedback from the M/G set tachometers. The resulting error signals are supplied to the Bailey scoop tube positioners, which position the M/G set hydraulic coupler scoop tubes. Feedback signals from the scoop tube actuators and speed tachometers stop motion when scoop tube positions are correct.

6.2.3 BWR/3&4

The recirculation system for BWRs 3&4 (Figure 6.2-3) consists of two piping loops external to the reactor vessel and 20 jet pumps which are internal to the reactor vessel. Each loop has a suction isolation valve, recirculation pump, a discharge isolation valve, instrumentation, and piping connecting to the reactor vessel.

The variable speed recirculation pumps take suction from the reactor vessel annulus region and provide flow to the jet pump riser pipes through the reactor vessel shell. The jet pumps induce additional water from the reactor vessel annulus region into the flow path, increasing system efficiency.

6.2.3.1 Recirculation System

The major parts of the recirculation system are discussed in the paragraphs that follow.

Suction Valve

There is a suction valve in each recirculation loop between the reactor vessel penetration and the recirculation pump. These motor operated suction valves are used for maintenance isolation of each recirculation pump.

Recirculation Pump

The recirculation pumps are vertical, single stage, centrifugal pumps driven by a variable speed electrical motor. The pumps provide a rated flow of 45,200 gallons per minute each. The speed of the recirculation pumps, and hence the system flow rate, is controlled by the recirculation flow control system.

Discharge Valve

Each recirculation loop contains a motor operated discharge valve located between the recirculation pump and the loop flow measurement device. The valve is remotely operated from the control room using a seal-in to close, throttle to open logic. The discharge valves are automatically jogged open on a pump startup by the recirculation flow control system. Additionally, the discharge valves close as part of the automatic initiation

sequence for low pressure coolant injection mode logic of the Residual Heat Removal System to provide an emergency core cooling flow path to the reactor vessel. (See Chapter 6.4)

Jet Pumps

There is a bank of 10 jet pumps associated with each of the external recirculation loops. All jet pumps are located in the reactor vessel annulus region between the inner vessel wall and the core shroud. The jet pumps are provided to increase the total core flow while minimizing the flow external to the reactor vessel.

Each jet pump has a converging nozzle through which the driving flow passes. This creates a high velocity and relatively low pressure condition at the jet pump suction. This low pressure condition creates additional flow from the vessel annulus, called induced flow, through the jet pumps. The combined flows mix in the mixer section of the jet pumps and then pass through the diffuser section. The diffuser section increases the pressure and decreases the fluid velocity. During full power operation approximately one-third of the total core flow comes from the discharge of the recirculation pumps while the remaining two-thirds is induced by the jet pumps.

6.2.3.2 Recirculation Flow Control

The major components of the recirculation flow control system are discussed in the paragraphs that follow (Figure 6.2-4).

Recirculation Motor Generator Set

The recirculation motor generator set consists of a drive motor, fluid coupler, generator, and the necessary auxiliary components to support motor generator set operation.

The recirculation motor generator set drive motor is a constant speed motor with a horse power rating between 7,000 and 9,000 HP. The drive motor supplies the fluid coupler with motive force through a constant speed input shaft.

The fluid coupler transmits a portion of the drive motor torque to the generator shaft. The amount of torque that is transmitted to the generator is determined by the coupling between the drive motor and generator, which is determined by the amount of oil in the fluid coupler. The quantity of oil in the fluid coupler is regulated by the positioning of a device called a "scoop tube". The greater the quantity of oil in the fluid coupler the greater the coupling between the generator and drive motor. Therefore, the scoop tube position determines the torque transmitted to the generator.

Recirculation Pump Speed Control Logic

The principle of operation in the flow control logic is to set a desired speed, measure the actual speed, compare these signals and produce a control signal used to position the scoop tube to obtain the desired speed. The components performing this function are discussed in the paragraphs that follow.

Master Flow Controller

The master flow controller provides the means of controlling both recirculation motor generator sets from a single controller. Normal operation of the master controller is in the manual mode of operation. By adjusting the manual potentiometer, a demand signal is developed and transmitted to the manual automatic (M/A) transfer station via a dual limiter.

In the automatic mode of operation the electro-hydraulic control system provides the desired main generator set load demand signal. Only one utility, Commonwealth Edison, has operated in the automatic mode and is licensed to do so.

Manual-Automatic Transfer Station Controllers

The M/A transfer station controllers provide the means of controlling the motor/generator set independently or as a paired unit. Similar to the master controller, the M/A transfer stations contain two modes of operation, manual and automatic. Normal mode of operation is both controllers in automatic.

Speed Limiters

There are two speed limiters used in the control logic to limit the maximum and/or minimum speed demand signal according to plant conditions.

The output of the M/A station controller is routed through two speed limiters. The first of these limiters limits recirculation pump speed to a maximum of 28% with the pump discharge valve not full open or feedwater flow less than 20%. This limiter prevents overheating of the recirculation pumps with the discharge valve not open and cavitation problems for the recirculation pumps and jet pumps at low feedwater flow rates.

The second limiter, operational limiter, limits the maximum recirculation pump speed demand to less than that required for approximately 75% power. This limit ensures a sufficient supply of feedwater to the reactor vessel to maintain the required operating level. This limiter is bypassed whenever level is normal or if all reactor feed pumps are in service. The operational limiter is supplied to plants with turbine driven feed pumps. Plants with motor driven feed pumps and an automatic startup of the standby pump do not require a load reduction to maintain level.

Speed Control Summer

The speed control summer, during normal operation, compares the speed demand signal to the actual generator speed and develops an error signal which is sent to the speed controller. The error signal is limited to about 8% of the control band.

Speed Controller

The speed controller establishes and maintains a speed demand signal in accordance with the error signal received from the speed control summer.

Scoop Tube Positioner

The scoop tube positioner converts the electrical input signal, from the speed controller, to a mechanical scoop tube position.

6.2.3.3 Recirculation Pump Start

Figure 6.2-5 lists the initial requirements and sequence of events occurring on a recirculation motor-generator startup. Briefly, the drive motor starts if all of the permissives are satisfied. If the scoop tube is in the proper position and the pump is not developing any differential pressure, a 7 second time delay is initiated after which the field breaker closes. During this time delay, the drive motor and generator are accelerating to approximately 12% loaded speed; this corresponds to 40% unloaded speed.

Note on Figure 6.2-4 that when the field breaker is open, the speed control system input to the error limiter is replaced by the signal generator, and the tachometer feedback by the speed controller output. This serves to position the scoop tube to the 40% unloaded position. Excitation is applied to the motor generator set exciter 5 seconds after the drive motor breaker is closed.

Excitation is provided from the 120 VAC startup excitation source. Thus, when the field breaker closes 7 seconds after the drive motor breaker closure, the motor generator set is accelerated to approximately 40% unloaded speed and fully excited to provide the necessary pump breakaway torque.

Once the field breaker is closed, excitation will automatically shift back to the generator output following a 20 second time delay. Since the recirculation pump trip breakers are normally closed, the pump motor is directly tied to the generator output and the recirculation pump starts when the generator field breaker closes.

The 15 second incomplete sequence timer allows time for the pump to "breakaway" and generate >4 psid. As soon as the 4 psid is generated, the incomplete sequence timer is de-energized and the timer resets. When the generator field breaker is closed, the speed control circuits are returned to normal and the pump will runback in speed to the limiter value of 28%, with the discharge valve closed. Following the pump start the discharge valve will then automatically jog open.

6.2.3.4 Power/Flow Map

The power/flow map (Figure 6.2-6) is a plot of percent core thermal power versus percent of total core flow for various operating conditions. The power/flow map contains information on expected system performance.

28% Pump Speed Line

Startup operations of the plant are normally carried out with both recirculation pumps at minimum speed. Reactor power and core flow follow this line for the normal control rod withdraw sequence with the recirculation pumps operating at approximately 28%.

Design Flow Control Line

This line is defined by the control rod withdraw pattern which results in being at 100% core thermal power and 100% core flow, assuming equilibrium xenon conditions. Reactor power should follow this line for recirculation flow changes with a fixed control rod pattern.

6.2.4 BWR/5-6

The recirculation system for BWRs 5&6 (Figure 6.2-7) consists of two piping loops external to the reactor vessel and 20 jet pumps which are internal to the reactor vessel. Each loop has a suction isolation valve, recirculation pump, flow control valve, a discharge isolation valve, instrumentation, and piping connecting to the reactor vessel.

The two speed recirculation pumps take suction from the reactor vessel annulus region and provide flow to the jet pump riser pipes through the reactor vessel shell. The jet pumps induce additional water from the reactor vessel annulus region into the flow path.

6.2.4.1 Recirculation System

The major parts of the recirculation system are discussed in the paragraphs that follow.

Suction Valve

There is a suction isolation valve in each recirculation loop between the reactor vessel penetration and the recirculation pump. These motor operated suction valves are used for maintenance isolation of each recirculation pump.

Recirculation Pump

The recirculation pumps are vertical, single stage, two speed, centrifugal pumps. Each is designed to deliver a rated flow of 35,400 gpm at a discharge pressure head of 865 feet. The pumps motors can receive 60 Hz power from 6.9kV buses or 15 Hz power from the associated low frequency motor generator set (LFMG).

In slow speed, the net positive suction head is supplied by the height of water in the reactor vessel. In fast speed, most of the net positive suction head is provided by the subcooling effect of the cooler feedwater flow entering the annulus

region where it mixes with the moisture returning from the steam separation stages.

Flow Control Valve

The flow control valve is a 24 inch, stainless steel, hydraulic operated ball valve. The valve is designed to provide a linear flow response throughout its entire stroke (22 to 100% open). The valve is positioned by a hydraulically actuated ram that receives motive power from an independent hydraulic power unit. The actuator is positioned by the Recirculation Flow Control System.

Discharge Isolation Valve

The discharge isolation valve is a 24 inch, motor operated, stainless steel, gate valve. Valve operation is similar to the suction valve.

6.2.4.2 Recirculation Pump Speed Control

The switchgear in Figure 6.2-8 includes five separate circuit breakers and a low frequency motor generator set. The breakers are interlocked through the pump control logic to prevent supplying the pump motor from both power supplies.

The interlocks provide the proper sequencing of circuit breaker closure during pump startup, speed changes, and shutdown.

The recirculation pump is always started in fast speed because the LFMG does not have the required capacity to supply the necessary breakaway torque.

Recirculation Pump Start Sequencing

To start a recirculation pump in fast or slow, the following permissives (Figures 6.2-9) must be met before the start sequence will initiate:

- Incomplete sequence relay not actuated
- CB-5 racked in
- Flow control valve in manual mode and at the 22% open position
- Suction and discharge valve greater than 90% open
- Vessel thermal shock interlocks satisfied

The incomplete relays activate as a result of the failure to complete the starting sequence. On a slow speed start, the incomplete sequence relay activates if the pump is not operating between 20 and 26% speed or CB-2 does not close within 40 seconds. During a fast speed start, the incomplete sequence relay activates if the pump is not operating at greater than 95% speed after 40 seconds. In addition, loss of logic control power will immediately initiate the incomplete sequence causing CB-1 and CB-5 to trip.

The flow control valve in manual prevents valve cycling during flow changes when the pump starts.

Requiring the flow control valve to be at the 22% position minimizes flow increase during pump start. This reduced flow during pump starts limits thermal stresses on vessel internals, limits power excursions, and allows the pump to reach desired speed faster.

The suction and discharge valves are required to be open during all pump operation for pump protection.

There are three reactor vessel thermal shock interlocks which prevent large changes in water temperature, both in the vessel and recirculation loops. The first of the three interlocks limits the temperature difference between the vessel bottom head drain and the steam dome temperature from exceeding 100 °F. This limit prevents rapid changes in bottom head region water temperature. During periods of low core flow, a stagnant layer of cold water can form in the bottom head region because of the cold control rod drive water. Large changes in recirculation flow (pump start) could

sweep away the cold layer, replacing it with hot water creating large temperature gradients on the reactor vessel and its internals. The second temperature interlock limits the difference between the steam dome and the applicable loop suction temperature to less than 50 °F. The 50 °F limit further restricts operation to avoid high thermal stresses on the pump and piping. The third interlock limits the difference between the two loops to less than 50 °F. This limit protects the pump against damage resulting from excessive heatups.

Slow Speed Start Sequence

The recirculation pumps are always started in fast speed. If after the initial start permissive are satisfied, total feedwater flow is greater than 30% and the power level interlock is bypassed, the slow speed start sequence is actuated.

In the slow speed start sequence CB-5 closes, accelerating the pump to 95% speed. At 95% speed CB-5 trips, allowing the pump to coast down. Simultaneously, CB-1 closes, starting the LFMG. When the pump reaches 20-26% speed, CB-2 closes holding the pump at 450 rpm (25% speed, 15 Hz).

Fast to Slow Speed Transfer

Fast to slow speed transfer can be accomplished manually or automatically. Manual transfer from fast to slow is accomplished by depressing both recirculation pump transfer to slow pushbuttons simultaneously. Automatic transfer from fast to slow is accomplished if any of the following conditions are met:

- Feedwater flow less than 30%
- Delta T between steam line and recirculation suction temperature is less than 7 °F.
- Reactor vessel water level 3
- EOC-RPT

6.2.4.3 Recirculation Flow Control

The recirculation flow control system, Figure 6.2-10 and 6.2-11, is capable of varying recirculation flow over a range of 35 to 100% with the recirculation pumps in fast speed or 30 to 40% in slow speed. The major components of the recirculation flow control system include:

- Master Controller
- Neutron Flux Controller
- Flow Controller
- Operational Limiter
- Hydraulic Power Unit
- Valve Actuator

Master Controller

The master controller provide a means of controlling both recirculation flow control valves from a single controller. Controller operation is accomplished in manual or automatic. When in the manual mode, a power demand signal is manually established by the operator with a slide switch on the front of the controller. In automatic mode of operation the controller accepts a load demand signal from the Electro-Hydraulic Control System This signal is then processed throughout the remaining RFC System circuitry to adjust recirculation flow and hence reactor power to balance the load demand. The normal mode of operation on the Master Controller is *MANUAL* mode.

Neutron Flux Controller

The neutron flux controller provides a second means of controlling both recirculation flow control valves from a single controller. In addition, it also provides a stabilizing effect on plant operation by virtue of its power feedback signal. When in manual mode, a flow demand signal is established by the operator. In automatic mode of operation the controller receives a neutron flux demand signal from the master controller which is compared to the reference APRM signal. These two signals are compared to produce an output signal in terms of a

flow demand signal. The normal mode of operation for this controller is *MANUAL.*

Flow Controller

The loop flow controllers, one for each loop, provide a means of individually controlling the flow control valves. These controllers can also be operated in manual or automatic. In the automatic mode the controllers receive a flow demand signal from the flux controller and also a flow feedback from the flow element in its recirculation loop suction piping. These two signals are compared and produce an output signal in terms of a flow error signal which is transmitted to its respective hydraulic power unit. Normal mode of operation is automatic.

Operational Limiter

The flow controller output signal is processed through a loop flow limiter. When the recirculation pumps are in *fast* speed the flow limiter limits the signal to a maximum of 48% loop flow (38% FCV position) in the event there is a loss of one reactor feed pump and level cannot be controlled above the low level alarm point.

The purpose of the limiter is to reduce reactor power to within the capacity of one reactor feed pump by closing the FCVs.

Hydraulic Power Unit

The hydraulic power unit is a self contained hydraulic oil system for each recirculation flow control valve. The HPU receives an electric flow signal from the flow controller and converts it into a hydraulic oil pressure signal which then positions the FCV via the valve actuator. FCV position cannot be changed without the HPU in operation.

6.2.4.4 Power/Flow Map

A tool used to monitor BWR performance is a power/flow map (Figure 6.2-12). The power/flow map is a plot of core thermal power (in percent of rated) versus core flow rate (also in percent of rated) for various operating conditions. The power/flow map contains information on expected system performance and limits on the recirculation system for operation of the recirculation pumps, jet pumps, and flow control valve.

6.2-5 Summary

The Recirculation System evolved from a 5 loop, with variable speed pumps, system for the BWR/2 to an internal jet pump two loop system for BWRs 3 through 6. The BWR/3 and 4 utilize two variable speed pumps and 20 internal jet pumps to obtain the necessary core flow while minimizing the vessel penetrations. BWRs 5 and 6 also have two independent recirculation loops like the BWR/3 and 4, but vary core flow by throttling flow with a flow control valve.

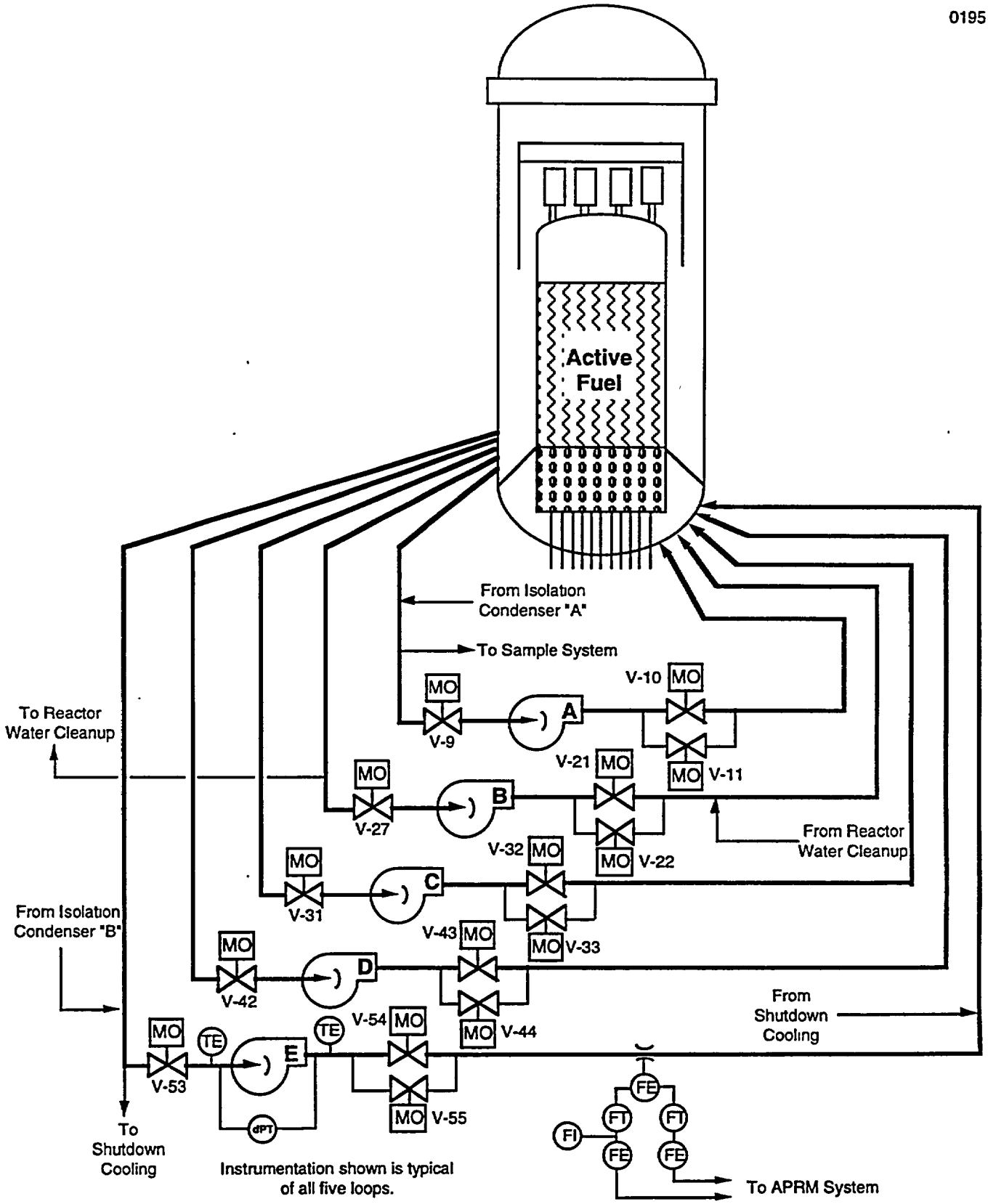

Figure 6.2-1 BWR/2 Recirculation System

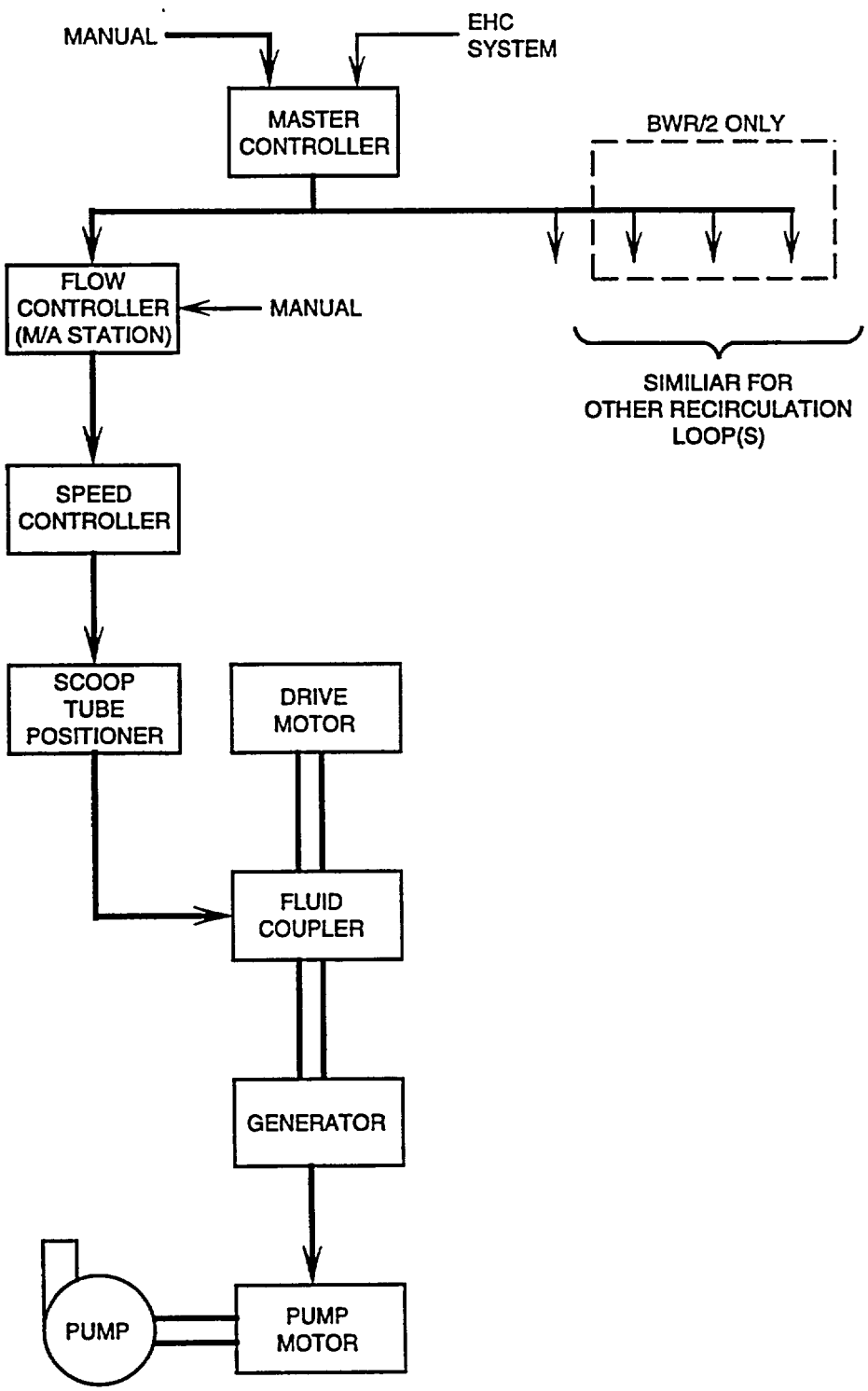

Figure 6.2-2 RFC System (BWR/2,3 & 4)

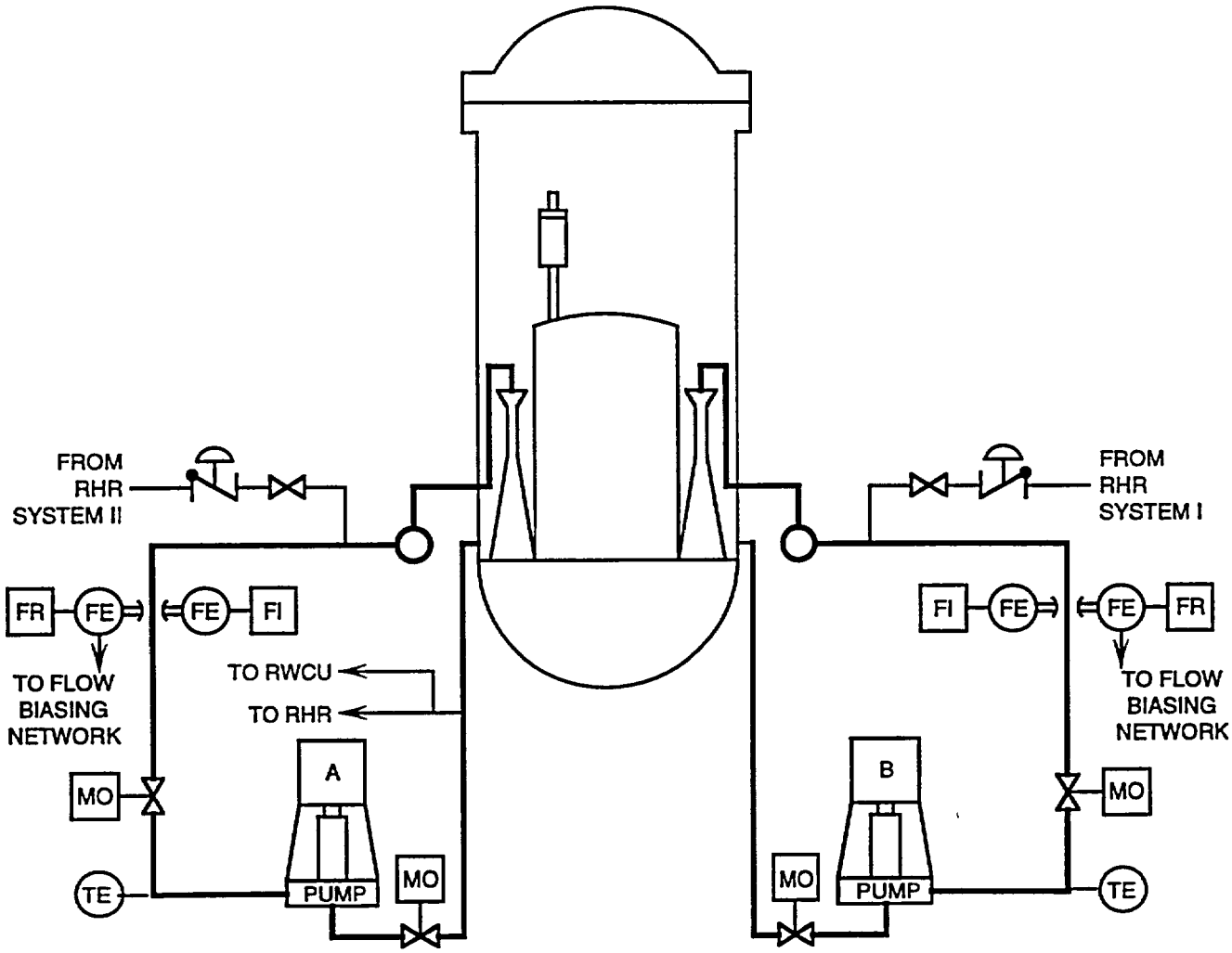

Figure 6.2-3 Recirculation System (BWR/3 & 4)

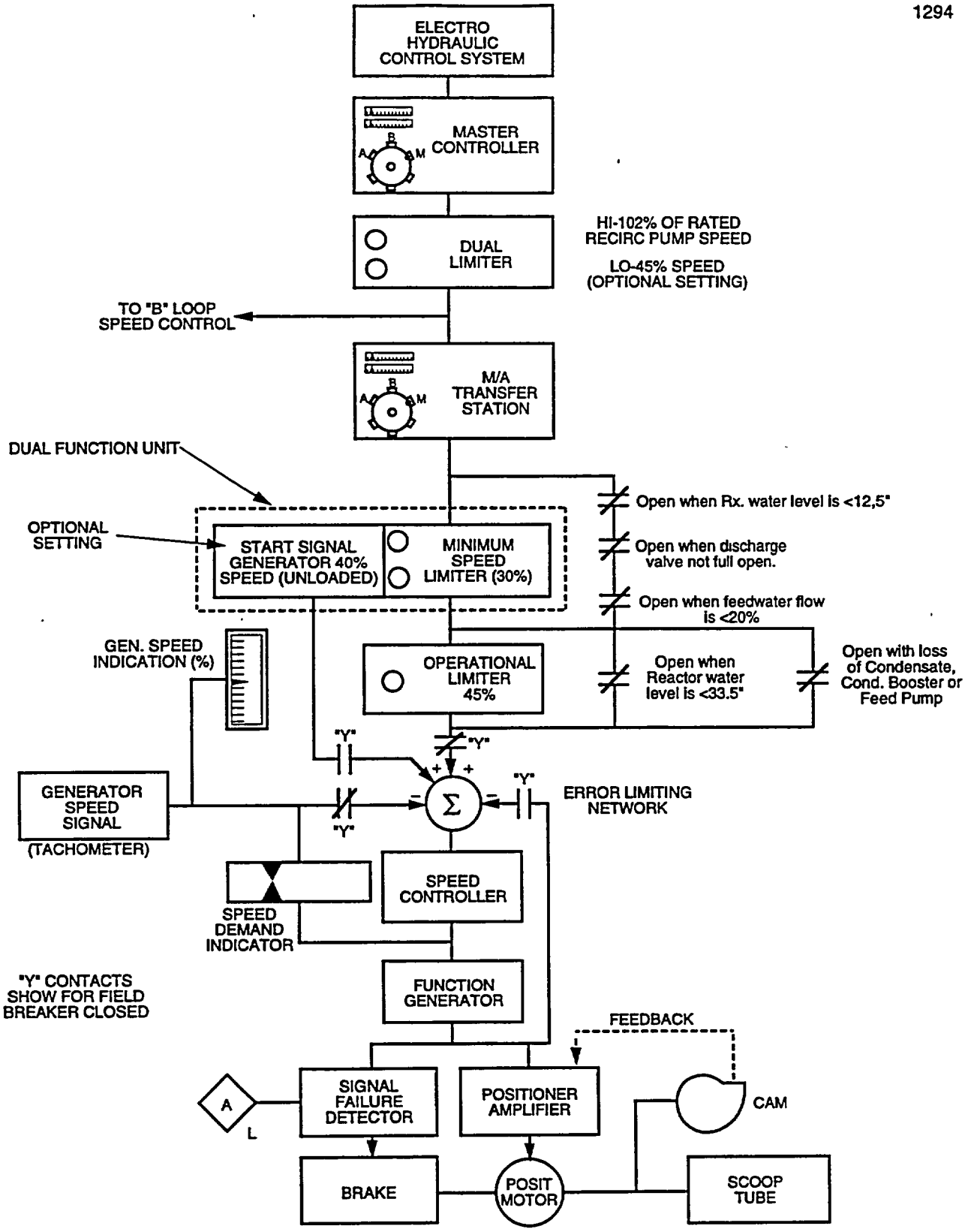

Figure 6.2-4 Recirculation System Flow Control Network (BWR/3/4)

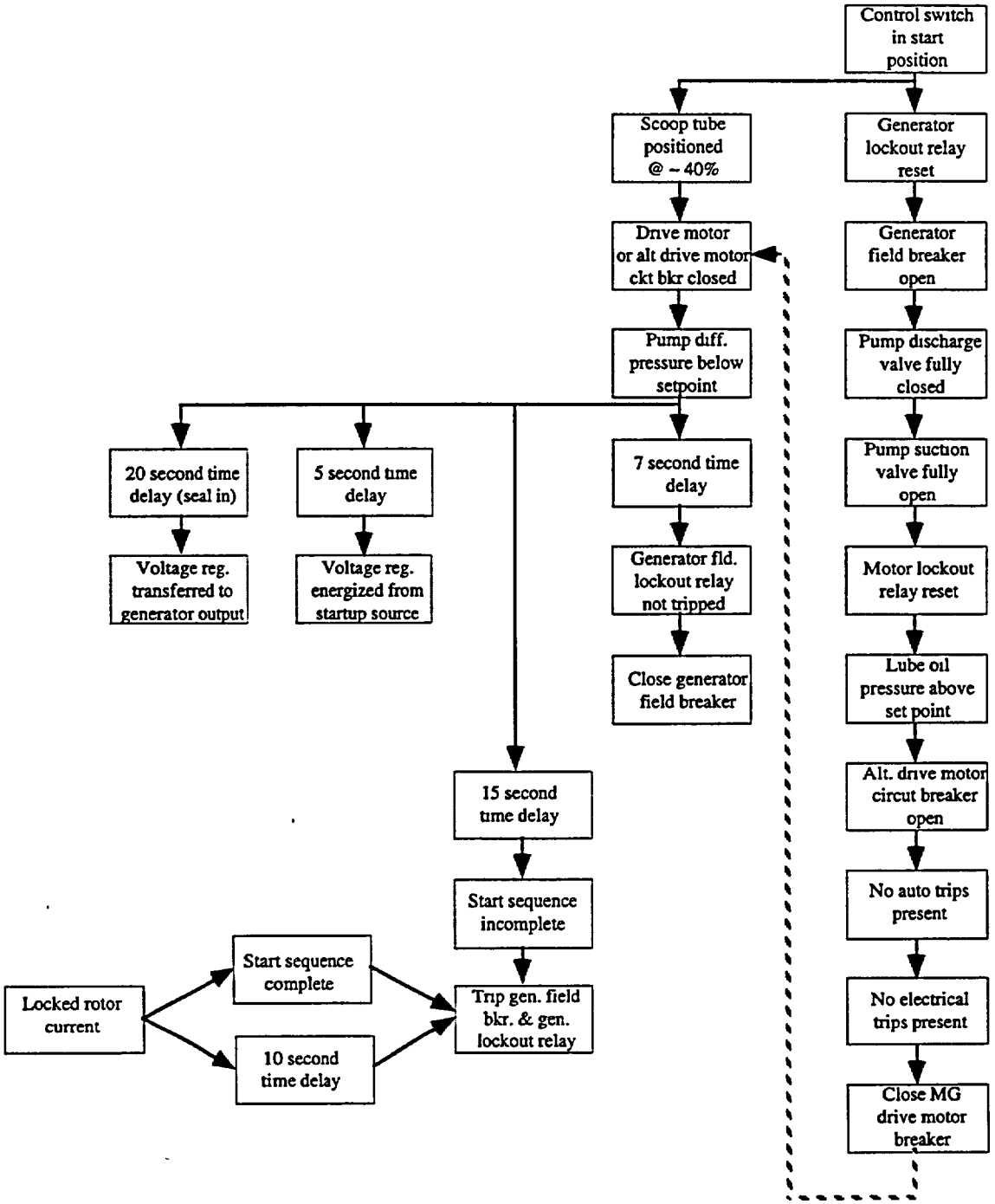

Figure 6.2-5 Recirculation Pump Motor Generator Start Sequence

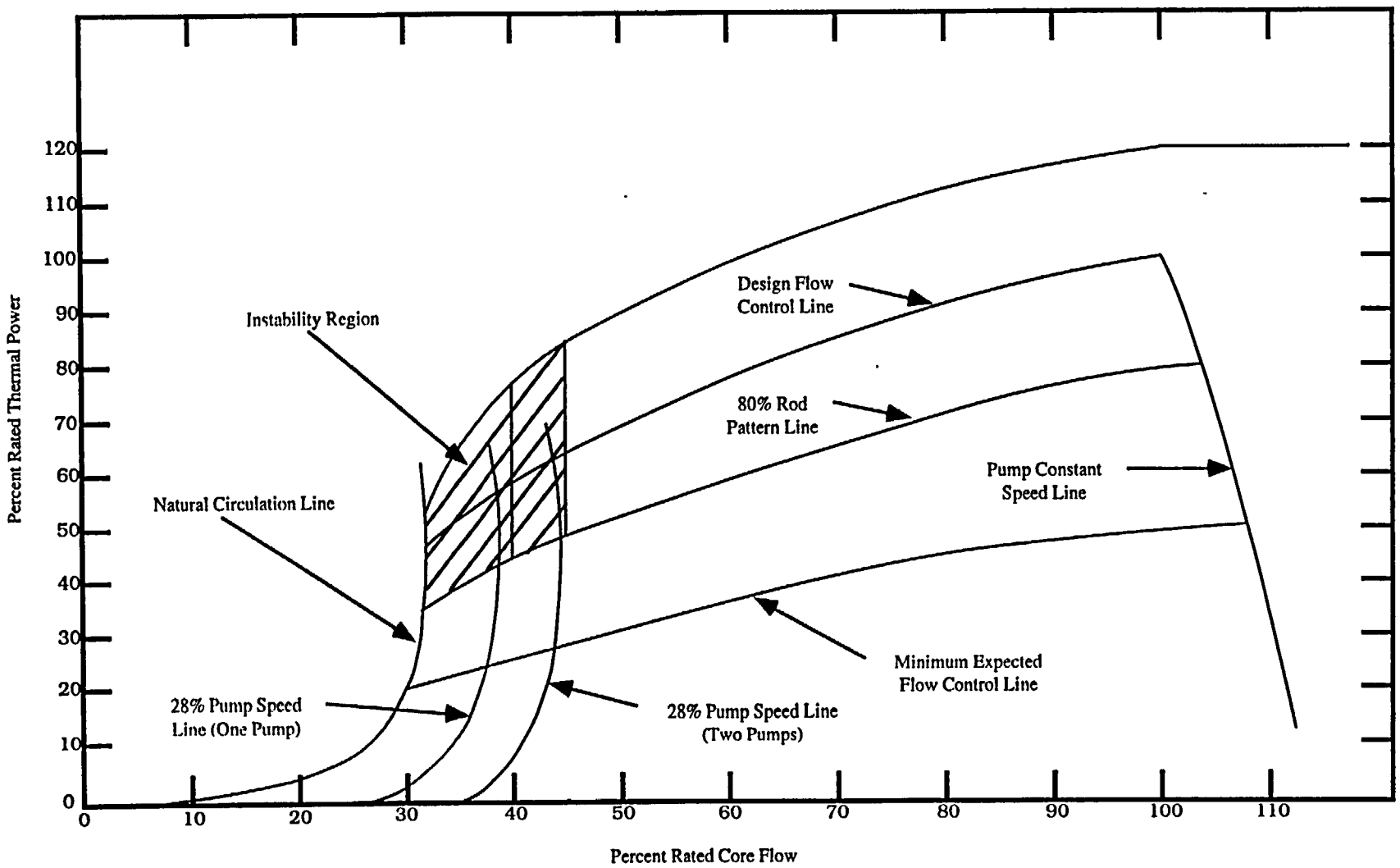

FIGURE 6.2-6 POWER/FLOW MAP (BWR/3 & BWR/4)

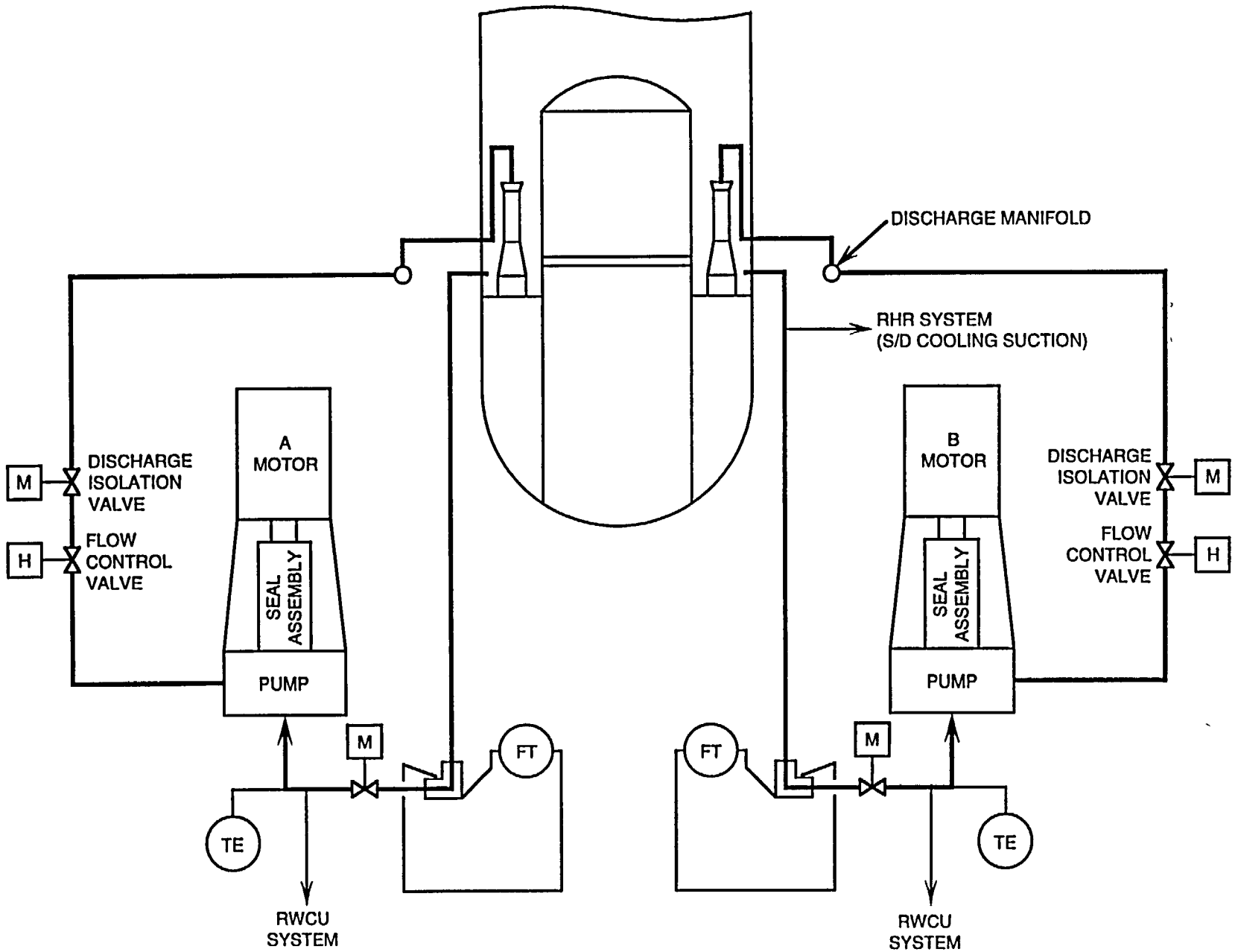

Figure 6.2-7 Recirculation System (BWR/5 & 6)

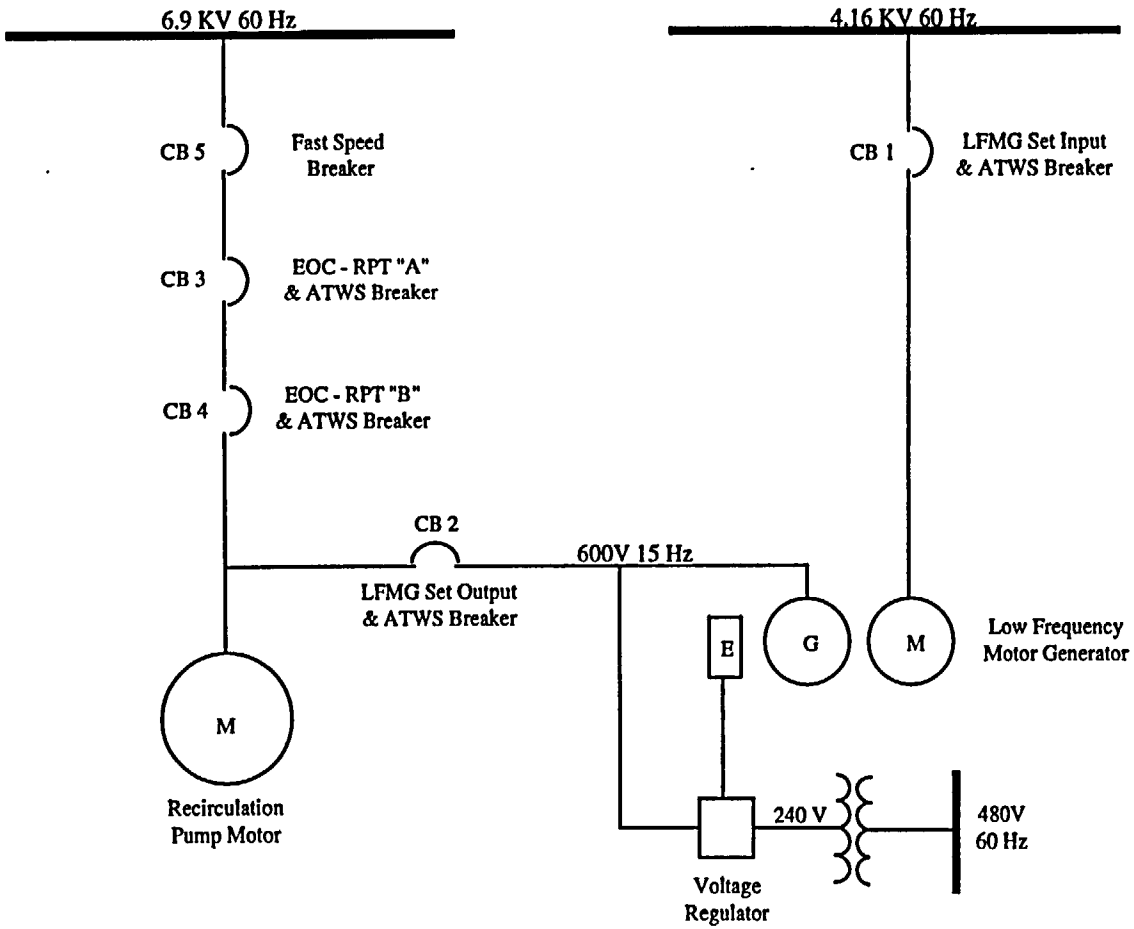

Figure 6.2-8 Recirculation Pump Power Supplies

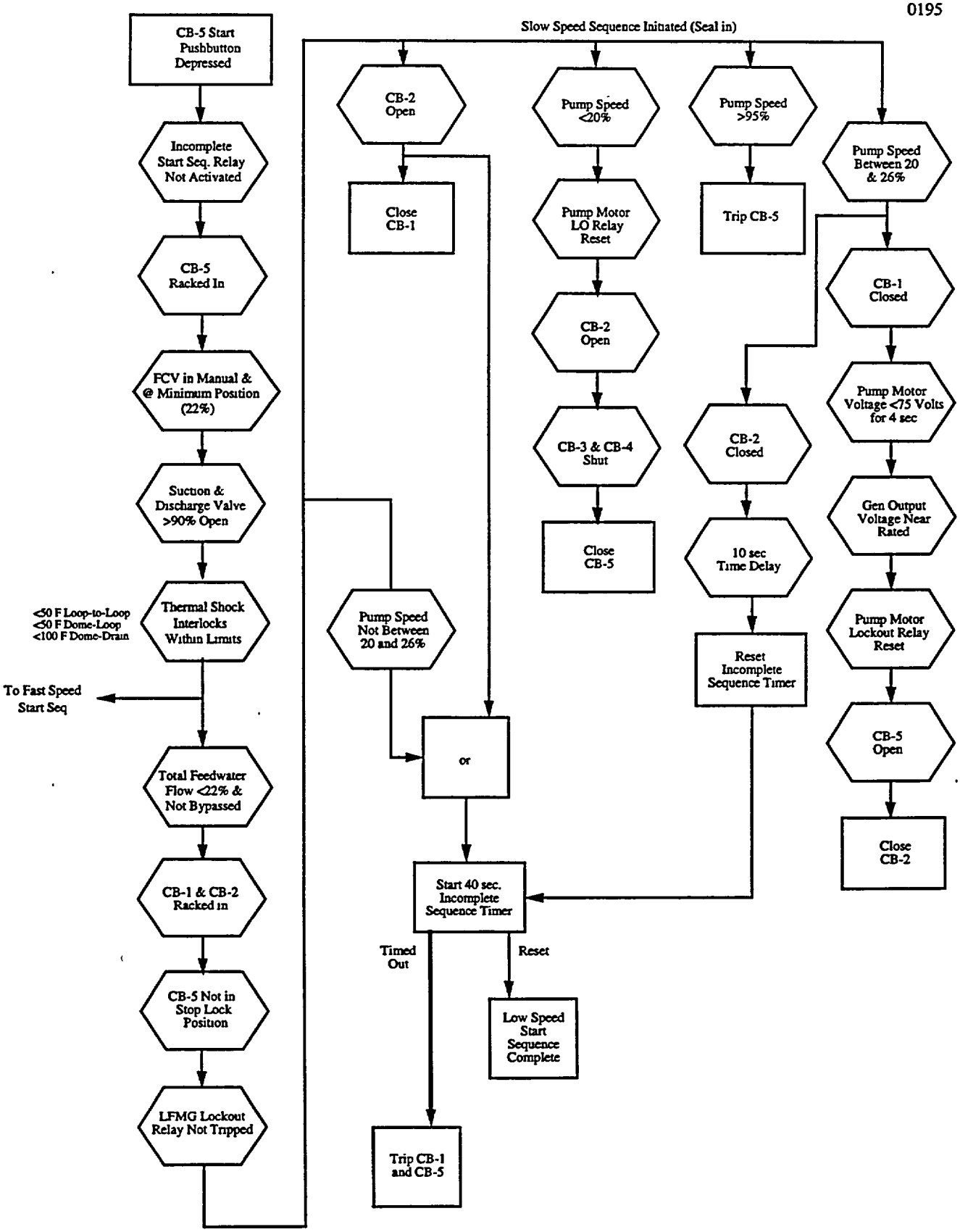

Figure 6.2-9 BWR/5 & 6 Slow Speed Start Sequence

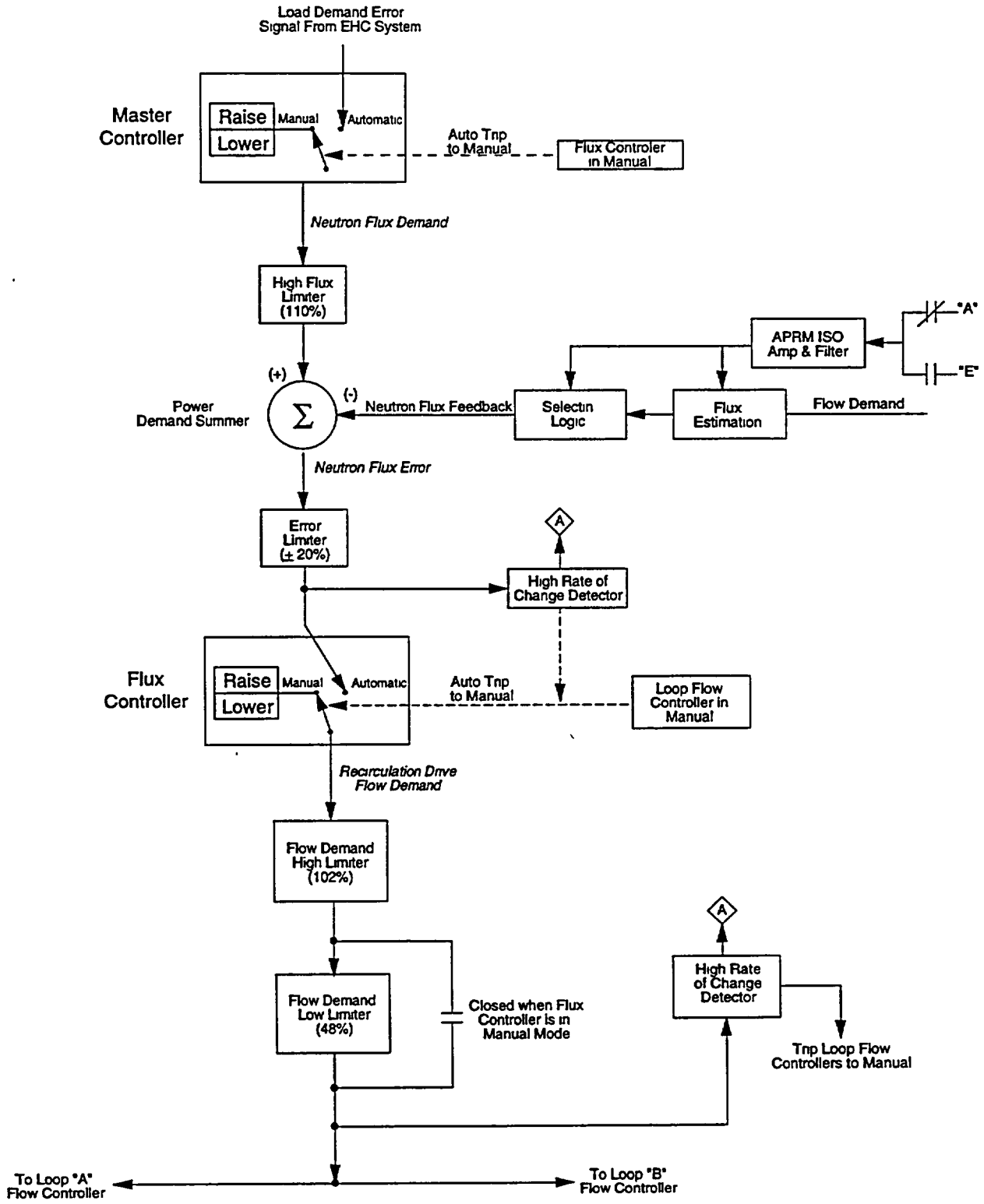

Figure 6.2-10 Recirculation Flow Control Network (BWR/5/6)

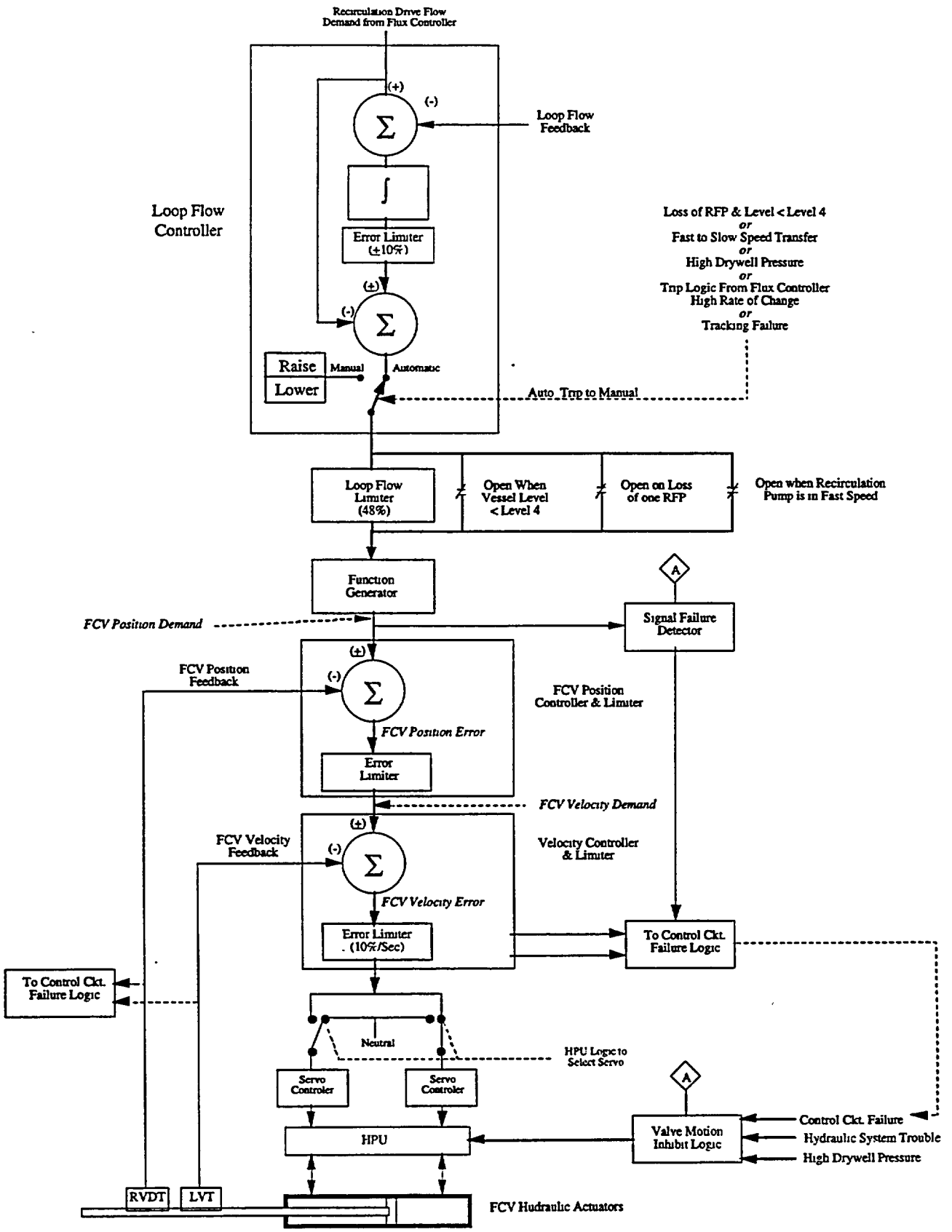

Figure 6.2-11 Recirculation Flow Control Network (BWR/5/6 Cont.)

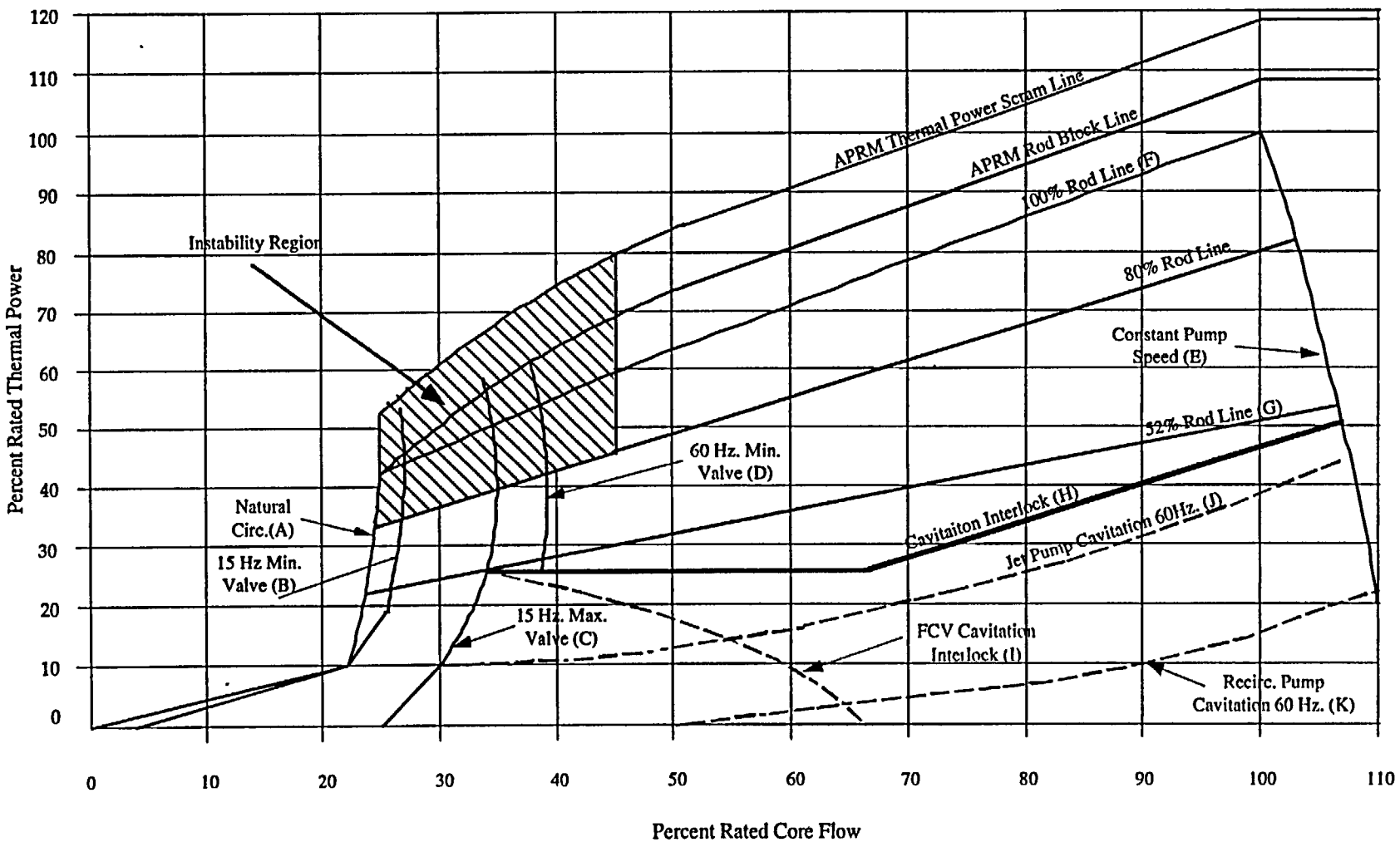

Figure 6.2-12 Power to Flow Map

Table of Contents

List of Figures

6.3 REACTOR ISOLATION PRESSURE and INVENTORY CONTROL

Learning Objectives :

1. Explain the purpose of the isolation condenser.
2. Explain the operations of an isolation condenser.
3. Describe how the various BWR product lines dissipate decay heat.
4. List the high pressure makeup water systems capable of providing makeup water to the reactor vessel when compensating for inventory loss via the pressure control method during vessel isolation.

6.3.1 Introduction

The discussion in this section deals with the various ways BWR product lines provide pressure and inventory control when isolated from their heat sink. In the event the reactor becomes isolated from its heat sink, some component or system must control reactor vessel pressure and inventory. All BWR product lines have Safety Relief Valves (SRVs) to provide over pressure protection, and hence control reactor pressure. In addition to SRVs, BWRs can control pressure with systems like the isolation condenser, reactor core isolation cooling system, high pressure coolant injecting system, and steam condensing mode of the residual heat removal system. All BWR facilities have a means of providing high pressure makeup water to the reactor vessel to compensate for inventory loss via the pressure control method.

In the case of the BWR/2 product line and certain plants of the BWR/3 product line, both of the isolation functions are carried out by a single system called the isolation condenser system. The isolation condenser system draws off reactor steam, condenses the steam in a condenser, and returns the resultant condensate to a recirculation system suction line. By conserving inventory, this system eliminates the need for additional sources of high pressure makeup.

All BWRs of other product lines use SRVs for pressure control and the reactor core isolation cooling system to provide high pressure makeup water to the reactor vessel. Additionally some BWR/4, all BWR/5, and all BWR/6 product line plants have another option available. The steam condensing mode of the residual heat removal system can be used for reactor pressure control. In this mode, reactor steam is reduced in pressure and then condensed in the RHR heat exchangers. Since the resultant condensate can be directed to the RCIC pump suction, both systems can be used together to provide inventory conserving closed loop operation. If the plant is equipped with a system called the high pressure coolant injection (HPCI) System it can also be used to control pressure by aligning the system in the test mode to the condensate storage tank (HPCI operation is discussed in chapter 6.4).

6.3.2 BWR/2 Product Line

The BWR/2 product line incorporates both pressure and inventory control into one system, isolation condenser system. The isolation condenser system is a standby, high pressure system that can remove fission product decay heat following a reactor isolation and scram when the main turbine condenser is not available as a heat sink. During reactor isolation, the isolation condenser will control the pressure rise and limit the loss of reactor water, thus avoiding overheating the fuel which could occur through opening of the safety relief valves with no water makeup capability.

The isolation condenser is not intended to be activated fast enough to have any effect upon the initial pressure spikes resulting from the various operational transients (turbine trip, main steam line isolation,...). The system can be activated

manually or automatically upon sustained high pressure. The isolation condenser has the capacity to remove reactor decay heat generated a few seconds following a reactor scram from rated power.

6.3.2.1 Isolation Condenser

The isolation condenser, figure 6.3-1, operates by natural circulation. During system operation, steam flows from the reactor, condenses in the tubes of the isolation condenser,and returns (by gravity) to the reactor. The water head, created by condensate flow to the reactor, serves as the driving force for the system.

The isolation condenser is approximately 55 feet long, 12 feet in diameter, and holds approximately 29,000 gallons of water at normal level. Two tube bundles are immersed in water, one bundle at each end of the condenser. The shell side of the condenser vents to atmosphere. Baffles are installed in the shell above the tube bundles to prevent the boiling action from driving shell water out through the shell vents.

The steam inlet valves are normally open so that the tube bundles are at reactor pressure even when in standby. The tube side of the isolation condenser is vented to the main steam line during normal reactor operation. A sustained high reactor pressure automatically puts the isolation condenser system in operation. An automatic initiation will signal the dc motor operated valve on the condensate return line to open and vent valves to the main steam line to close. Steam then flows, under reactor pressure, to the isolation condenser. The steam is routed to both condenser tube bundles where it is condensed by the cooler water in the shell side of the condenser. To obtain the desired flow of condensate from the isolation condenser to the reactor vessel, the normally closed condensate return valve can be throttled by the operator in the control room.

During operation, the water on the shell side of the condenser will boil off and vent steam to the atmosphere. Two radiation monitors are provided on the shell side vent so that in the event of excessive radiation levels, the control room operator will be alerted and can take necessary corrective actions.

Following a reactor isolation and scram, the energy added to the coolant will cause reactor pressure to increase and may initiate the isolation condenser. The capacity of this system is equivalent to the decay heat rate generation 5 minutes following the scram and isolation. With no makeup water, the volume of water stored in the isolation condenser will be depleted in 1 hour and 30 minutes. This allows sufficient time to initiate makeup water flow to the shell side of the condenser.

Makeup water is normally added from the demineralized water makeup system to avoid concentrating radioactive matter resulting from normal water evaporation that occurs in standby mode. Additional water is available from the condensate and fire protection systems.

6.3.3 BWR/3 Product Lines

The BWR/3 product line plants are divided evenly as to the number that utilize the isolation condenser or the newer reactor core isolation cooling system. The previous isolation condenser discussion also applies to the BWR/3 product lines that have isolation condensers. Therefore, it will not be covered again in this section.

6.3.3.1 Reactor Core Isolation Cooling

The Reactor Core Isolation Cooling (RCIC) system , figure 6.3-2, consists of a steam turbine driven pump capable of delivering water to the reactor vessel at operating conditions. Operation of the RCIC system is fully automatic, or manual by operator selection. The system will start automatically upon receipt of an initiation signal from the reactor vessel low water level sensors. The system will shutdown automatically upon recovery of

reactor water level to the high water level set point or upon indication of certain RCIC malfunctions which will trip the turbine.

Water supply to the system is normally from the condensate storage tank through a motor operated suction valve and check valve. This RCIC suction line is maintained flooded in the standby condition to keep the RCIC pump continuously primed. An alternate source of water for the RCIC system is provided by the suppression pool. This source of water would be used if the water level in the storage tank(s) were low or the water level in the suppression pool is too high.

The turbine is driven by steam produced in the reactor vessel and exhausts to the suppression pool, under water. The turbine driven pump supplies makeup water from the condensate storage tank, or alternately from the suppression pool, to the reactor vessel via the feedwater piping. Additional discharge flow paths are provided to allow recirculation to the condensate storage tank for system testing and to provide pump minimum flow to the suppression pool for pump protection. Sufficient capacity is provided to prevent reactor vessel level from decreasing below the top of the core. The system flow rate is approximately equal to the reactor water boil off rate 15 minutes following a reactor scram and isolation .

6.3.4 BWR/4 Product Lines

The BWR/4 product lines all have a RCIC system to provide core cooling makeup water to the reactor vessel under isolation conditions. Later BWR/4 plant designs utilize the RHR system as an additional mode of isolation pressure and reactor water inventory control.

Following isolation of the reactor from its primary heat sink, the residual heat removal system steam condensing mode, figure 6.3-3, is used in conjunction with the RCIC system to remove decay heat and minimize makeup water requirements. Decay heat raises the temperature and pressure of the coolant until the safety relief valves open. As the SRVs continue to remove decay heat in the form of steam, the water level in the reactor vessel would decrease. The RCIC system would be started either manually or automatically to provide makeup water to the vessel under this condition. Shortly after the RCIC system is started, the steam condensing mode can be lined up for operation.

To begin steam condensing operation, the heat exchanger shell side inlet and outlet valves are closed. The service water system supplying the heat exchangers is placed in operation to provide cooling water flow.

The heat exchangers level controller is placed in the manual mode and the level control valve is opened about 10%. The heat exchanger vent valves are throttled open to allow noncondensible gases to vent to the suppression pool. With the pressure controller set at zero, the steam inlet valve is slowly opened. The pressure set point is slowly increased to 50 psig, allowing steam pressure to force water from the heat exchanger to the suppression pool through a motor operated isolation valve. As level decreases, the level control valve is adjusted to maintain desired level. The pressure controller is placed in the automatic mode and pressure is raised to 200 psig.

When RHR system outlet conductivity indicates adequate purity, the flow of condensate is shifted from the suppression pool to the RCIC pump suction. The level control valve is controlled by the lower of two signals, heat exchanger level or RCIC pump pressure. The suction pressure controller is normally set at 45 psig to prevent over pressurizing the RCIC pump suction piping. Level is adjusted to remove the desired amount of decay heat, either to maintain the plant in hot standby or to begin a plant cooldown. As heat exchanger level is decreased, more surface area of the tubes is exposed, thus allowing steam to condense faster. The RCIC pump flow controller is adjusted to equal the rate of condensation, thus reactor water level remains nearly constant. The higher pressure

in the RCIC System suction piping closes the check valve in the CST suction line, ensuring that condensate is pumped from the RHR heat exchangers.

The flow path for the steam condensing mode is as follows: reactor steam passes through the combined RCIC turbine/RHR heat exchanger steam line to the RHR heat exchanger(s); condensate from the RHR heat exchanger(s) is forced (by heat exchanger pressure) to the suction of the RCIC pump; condensate is pumped by the RCIC System to the reactor vessel via the feedwater line. This mode must be manually aligned by the control room operator.

6.3.5 BWR/5 and BWR/6 Product Lines

The BWR/5 and BWR/6 product lines provide reactor vessel pressure and water level control during isolated conditions with the RCIC system and steam condensing mode of the residual heat removal system. The basic RCIC remains unchanged except for changes in turbine gland sealing and pump discharge. Some BWR/6s were designed to have the RCIC system discharge into the reactor vessel head for better pressure control.

6.3.6 Summary

All BWRs provide pressure and inventory control for the reactor vessel. All BWRs are equipped with SRVs to provide over pressure protection. In addition to SRVs Isolation condensers are employed for pressure and inventory control for BWR/2s and some 3s. reactor core isolation cooling systems are used for BWR/4, 5s, 6s and some 3s for pressure and inventory control when the reactor is isolated. In addition to the reactor core isolation cooling system, some BWR/4s, 5s and 6s are equipped with a steam condensing mode of the residual heat removal system for pressure control.

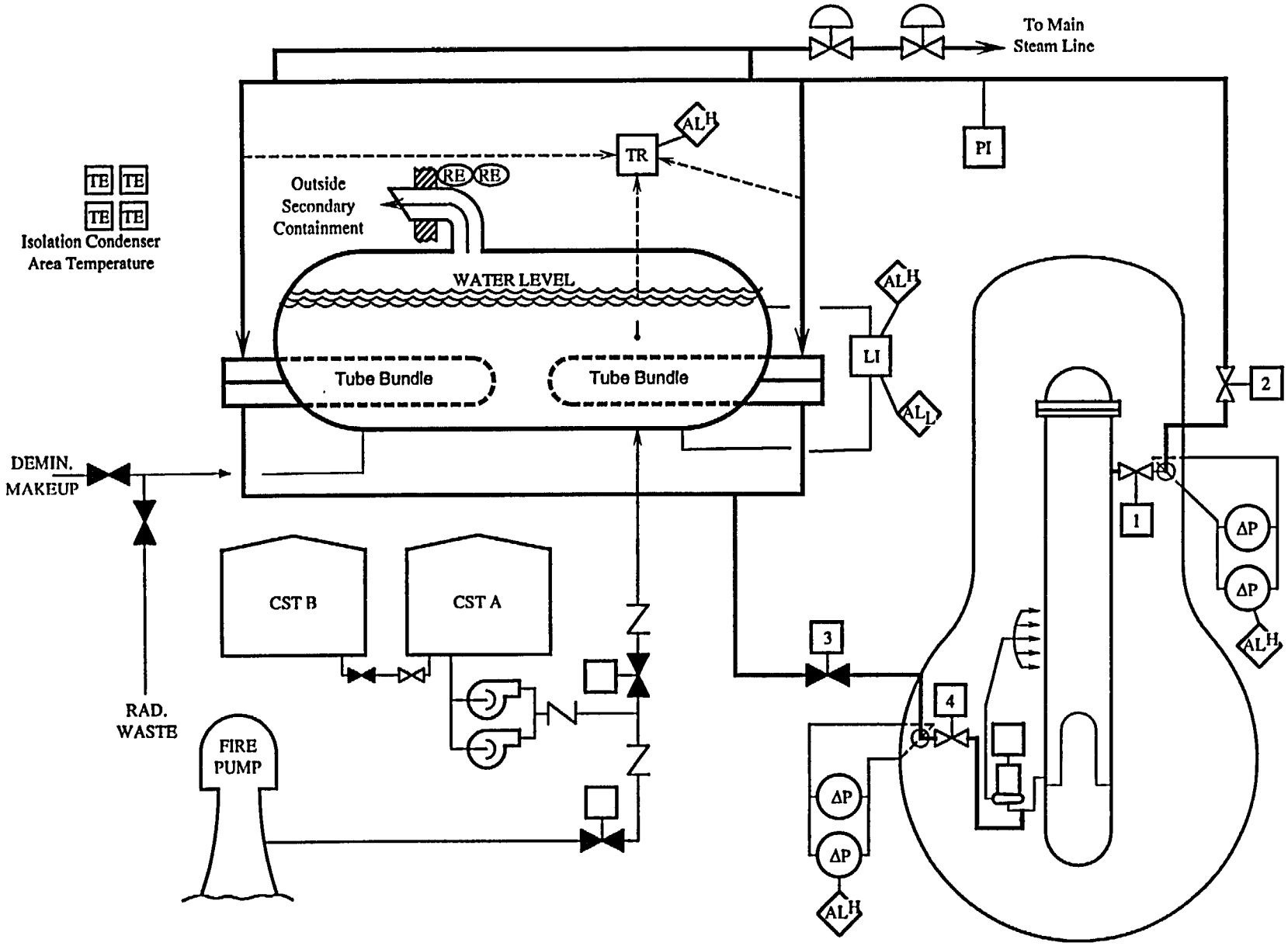

Figure 6.3-1 Isolation Condenser System (BWR/2/3)

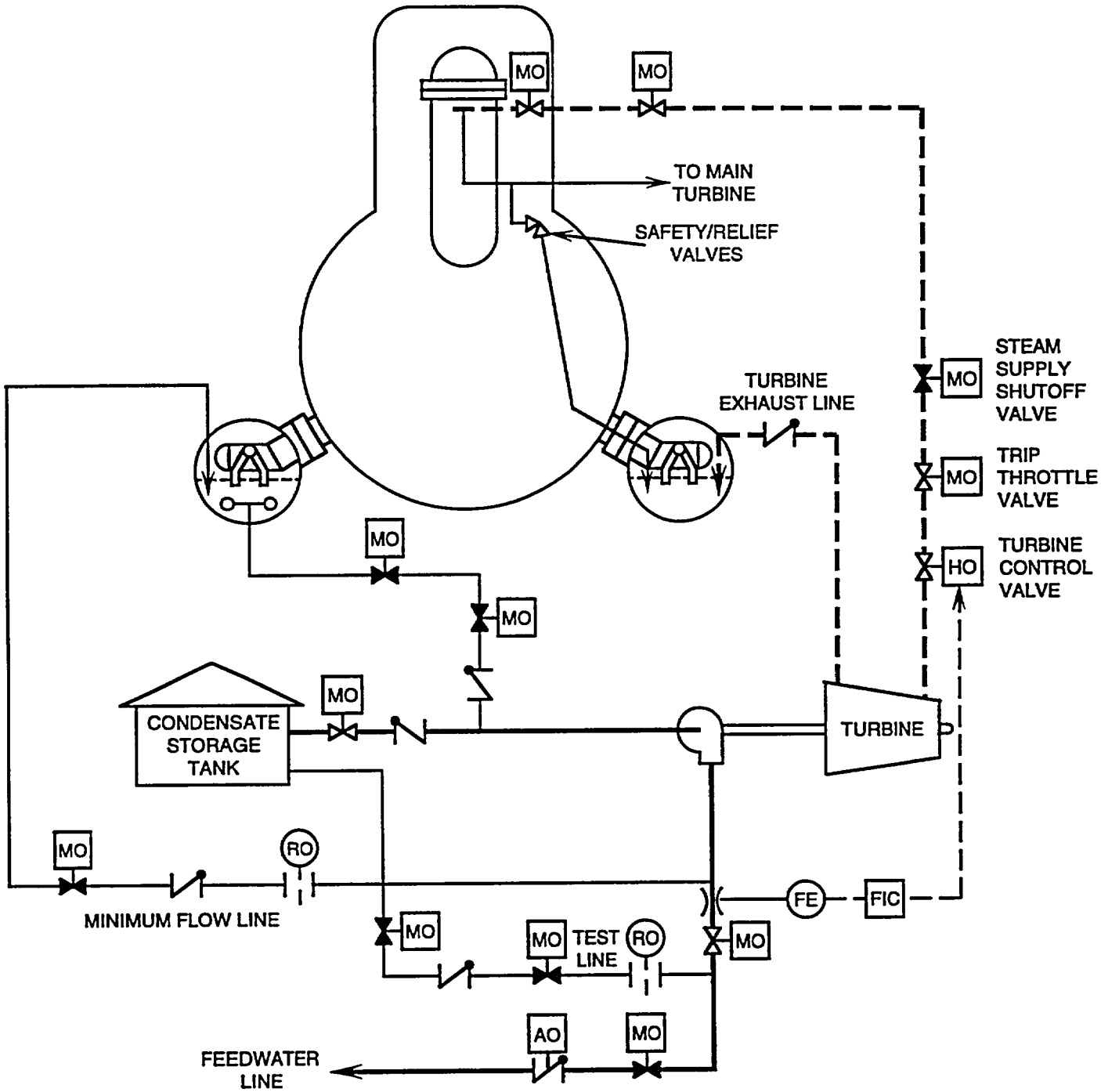

Figure 6.3-2 RCIC System (BWR/3/4)

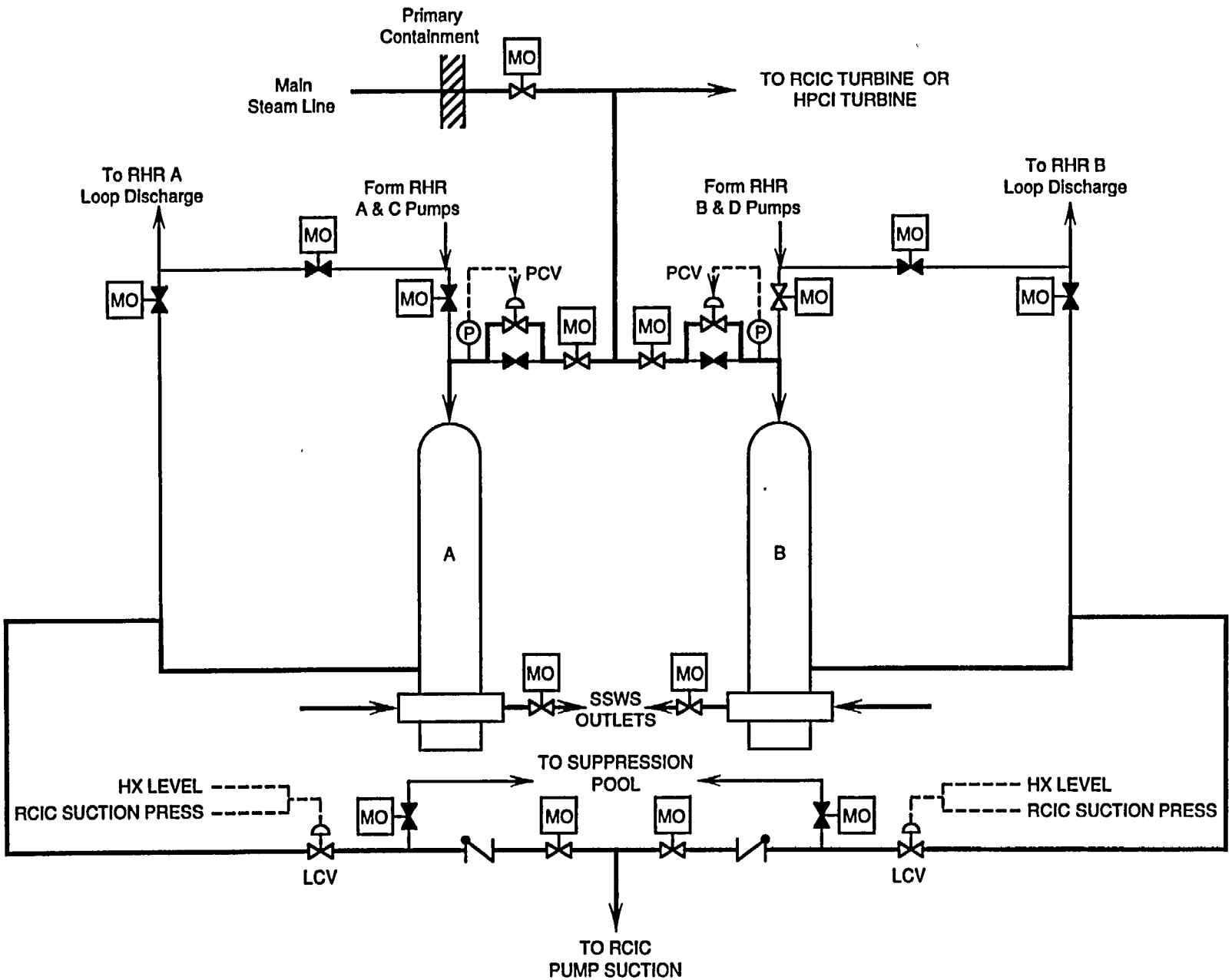

Figure 6.3-3 Steam Condensing Mode of RHR System BWR/4-6

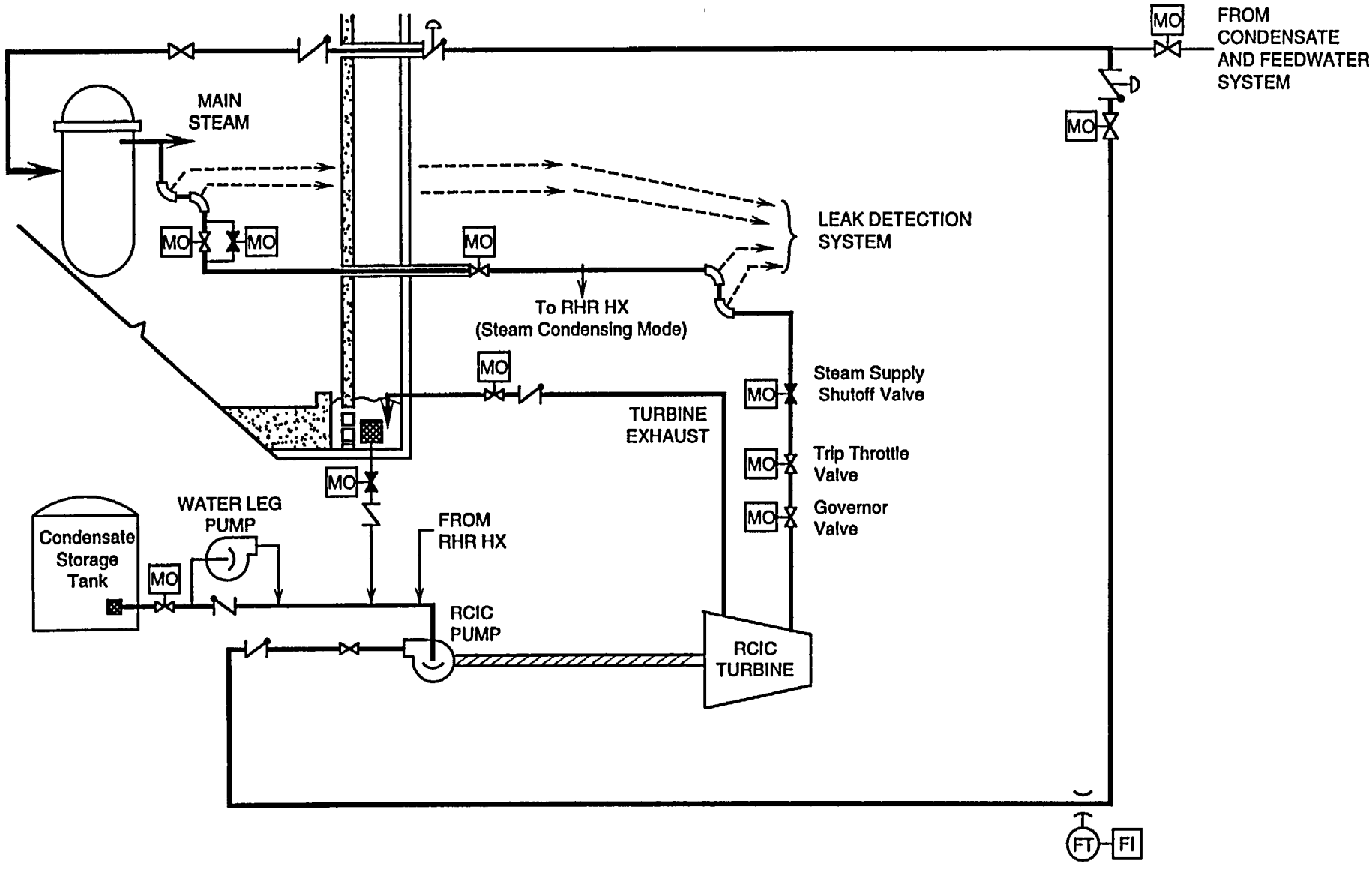

Figure 6.3-4 RCIC System (BWR/5/6)

Table of Contents

List of Figures

6.4 EMERGENCY CORE COOLING SYSTEMS

Learning Objectives :

1. List the high and low pressure Emergency Core Cooling Systems for the various product lines and explain the purpose of each.

2. List the advantages the BWR/5 and BWR/6 ECCSs have over the BWR/3 and most of the BWR/4 product line ECCSs.

3. Explain how the various types of ECCSs provide core cooling.

4. List the advantages between the old/new ECCS suction strainers.

5. List the four identified strainer resolution options.

6. Explain why a BWR/4 should have a higher core damage frequency than a BWR/5 or BWR/6.

6.4.1 Introduction

The Emergency Core Cooling System (ECCS) package provided by a particular product line is dependent on the vintage of the plant and the regulations during that period of time. In all cases there are high pressure and low pressure ECCSs. The Automatic Depressurization System is functionally the same for all facilities.

The purpose of the ECCSs, in conjunction with the containment systems, is to limit the release of radioactive materials to the environment following a loss of coolant accident so that the resulting radiation exposures are within the guideline values of 10 CFR 100.

6.4.2 BWR/2 ECCSs

The BWR/2 product line ECCSs consists of the Isolation Condenser System, Automatic Depressurization System, and the Core Spray System. The three ECCSs operate in various combinations to maintain peak cladding temperature below 2200°F and within the limits specified in 10 CFR 50.46 for any size break LOCA. They must also meet single failure criteria. The Isolation Condenser System is a passive high pressure system which consists of two independent natural circulation heat exchangers that are automatically initiated by high reactor pressure or low-low (level-2) water level. Isolation Condenser operation is discussed in chapter 6.3. The Feedwater System can supply an adequate amount of cooling water to replace that lost through an extended range of pipe break sizes, providing normal station power and/or offsite power is available.

6.4.2.1 Automatic Depressurization System

The Automatic Depressurization System (ADS) consists of five automatically activated relief valves that depressurize the reactor vessel during a small break LOCA to permit the low pressure Core Spray System to inject water on top of the core.

The five ADS valves are actuated by low-low-low (level-1) reactor water level, high drywell pressure, indication that a core spray booster pump has started, and a 120 second time delay. Only four of the five SRVs are required to achieve depressurization in the allowable time period.

6.4.2.2 Core Spray System

The Core Spray System provides an adequate supply of cooling water independent of the Feedwater System and can be powered from the emergency power system.

The Core Spray System (Figure 6.4-1) is a low pressure system which supplies cooling water after reactor pressure is reduced to 285 psig. This system will prevent the reactor from overheating following intermediate or large breaks. To accommodate some intermediate to small pipe breaks when feedwater is not available, the ADS will depressurizes the reactor thus permitting the Core Spray System to provide core cooling.

The Core Spray System consists of two identical loops. Each loop contains two main pumps, two booster pumps, two sets of parallel isolation valves one set inside and the other outside the drywell, a spray sparger, and associated piping, instrumentation and controls. Each pump is rated at 3400 gpm full flow capacity.

Water is supplied to the system from the suppression pool. Also, the Fire Protection System is connected to each of the core spray loops to provide a backup supply of water. Each loop has a test recirculation line to the suppression pool for full flow testing without discharging into the reactor vessel. The piping up to the test valve is carbon steel, designed for 400 psig and 350^{0}F. From the injection isolation valves to the reactor vessel, the piping is stainless steel designed for 1250 psig and 575^{0}F. A core spray filling system maintains the Core Spray System full to preclude any danger of water hammer when the system goes in operation.

The discharge from each of the main pumps flows through a check valve to a common header that supplies water to the booster pumps and a bypass line around the booster pumps. The booster pumps discharge piping contains motor operated isolation valves outside the drywell and air operated testable check valves inside the drywell. Flow from each loop is directed from the pumps through two parallel normally closed motor operated valves, a single line at the containment penetration, two parallel check valves, one locked open manually operated valve and into the sparger.

Both Core Spray Systems and their diesel generators will automatically start upon the detection of one high drywell pressure or one low-low reactor vessel level condition. These conditions generally indicate a pipe break. The system can also be manually initiated by the control room operators.

6.4.3 BWR/3 ECCSs

The BWR/3 product line high pressure ECCS consists of an ADS system and either a Feedwater Coolant Injection (FWCI) System or a turbine driven High Pressure Coolant Injection System, Figure 6.4-2. The low pressure ECCS consists of two Core Spray System loops and two Low Pressure Coolant Injection loops (either as a separate system or as a mode of the Residual Heat Removal System).

6.4.3.1 High Pressure Coolant Injection System

The High Pressure Coolant Injection System (HPCI) maintains adequate reactor vessel water inventory for core cooling on small break LOCAs, assist in depressurization of the reactor vessel to allow the low pressure ECCSs to inject on intermediate break LOCAs, and backs up the function of the Isolation Condenser or Reactor Core Isolation Cooling System under reactor isolation conditions.

The HPCI system, Figure 6.4-3, is an independent ECCS requiring no AC power, plant service and instrument air, or external cooling water systems to perform its purposes. The HPCI system consists of a turbine, turbine driven pumps, the normal auxiliary systems required for turbine operation, and associated piping and instrumentation.

The HPCI system is normally aligned to remove water from the condensate storage tank and pump the water at high pressure to the reactor vessel via the feedwater piping. The suppression pool is an alternate source of water with automatic

selection on high suppression pool water level or low condensate storage tank water level. A test line permits functional testing of the system during normal plant operation. A minimum flow path to the suppression pool is provided for the HPCI pump in the event the pump is operated with a closed discharge path.

High pressure emergency core cooling for small and intermediate line breaks is provided by the HPCI System. During such breaks, reactor water level could drop to a level where the core is not adequately cooled while the reactor remains at or near rated pressure. With reactor pressure high, the low pressure ECCSs would not be capable of supplying water to the reactor vessel. The HPCI system can supply makeup water to the reactor vessel from above rated reactor pressures to a pressure below that of the low pressure ECCSs injection pressure.

System initiation can be accomplished by automatic signals or manually by the control room operator. Receipt of either a reactor low-low water level or high drywell pressure will automatically start the HPCI system.

6.4.3.2 Core Spray System

The Core Spray System (Figure 6.4-4) pumps water from the suppression pool into the reactor vessel via spray nozzles located on independent ring spargers located within the core shroud above the fuel assemblies. The nozzles are positioned to provide a uniform distribution of coolant to the fuel assemblies.

The Core Spray System consists of two independent loops. Each loop contains a motor operated injection stop valve outside the drywell and a testable check valve plus a manual stop valve within the drywell. Each loop also contains suction isolation valves, test line, minimum flow line and a keep fill line.

The Core Spray System is initiated automatically to provide core cooling upon receipt of either high drywell pressure or low-low vessel water level and low reactor pressure.

6.4.3.3 Low Pressure Coolant Injection (LPCI) System

The LPCI system is a closed loop system of piping, pumps, and heat exchangers that are designed to remove post power operation energy from the reactor under both operational and accident conditions. The LPCI system accomplishes this function in several but independent modes of operation.

- LPCI Mode - The LPCI mode operates in conjunction with the HPCI, ADS, and Core Spray systems to restore, if necessary, the water level in the reactor vessel following a LOCA.
- Suppression Pool Cooling Mode - This mode of the LPCI system is manually initiated following a LOCA to prevent pool temperature from exceeding 170°F.
- Containment Cooling Mode - The containment cooling mode permits spray cooling of the drywell and suppression chamber to remove additional heat energy from the primary containment following a LOCA. This is accomplished through the condensation of steam and spray cooling of noncondensibles.

The LPCI system (Figure 6.4-5) includes two separate circulating loops. Each loop includes a heat exchanger, two main system pumps in parallel, and associated piping. The two loops are normally cross-connected by a single header, making it possible to supply either LPCI loop from the pumps in the other loop.

The LPCI system pump discharge piping is maintained full of water during normal plant operation by a safety system jockey pump or the condensate system.

The LPCI system employs both automatic and manual operation as well as a combination of both, depending on the mode being used. Water is supplied from the LPCI System to the core by injecting into the reactor recirculation system discharge lines.

LPCI Mode

The LPCI mode is established automatically or manually to restore and maintain water level in the reactor vessel to at least two-thirds core height following a LOCA. A LOCA, indicated by vessel level sensing devices or pressure sensing devices in the drywell, actuates the automatic action of the LPCI mode. A combination reactor vessel low-low water level and vessel pressure low or high drywell pressure will provide signals for the following:

- Start LPCI pumps. If normal auxiliary power is available all four pumps start with no time delay. If standby AC power is supplying the bus, pumps A and C start immediately and pumps B and D start after a five second time delay.
- Stop service water pumps, if running.
- Actuate loop selection logic to select the undamaged reactor recirculation loop for injection.
- Opens LPCI heat exchanger valves (inlet, outlet, and bypass).
- Close containment spray valves, if open.

During LPCI operation, suction is taken from the suppression pool and pumped into the core through one of two recirculation loops. Determination of the broken loop is performed by the LPCI loop selection logic, Figure 6.4-6. Four differential pressure switches connected in a one-out-of-two twice logic array determines the preferred loop for injection by measuring the differential pressure between the jet pump risers in both recirculation loops.

A differential pressure greater than 1 psid between loops is indicative of a pipe break. The logic circuit considers the lowest pressure recirculation loop to be broken and ensures LPCI flow is directed only to the good loop by performing the following (assume loop A riser pressure is greater than loop B):

Good loop A

Closes the loop A recirculation pump discharge and discharge bypass valves. Recirc pump A will trip if running. This ensures that LPCI flow is sent directly to the core via the recirc discharge line and jet pumps.

Opens the LPCI injection valves to recirc loop A when reactor pressure decreases to <350psig, to provide maximum LPCI flow to the reactor.

Broken Loop B

Closes the LPCI injection valves to recirc loop B to preclude water loss from the broken pipe.

Ensures that recirc loop B isolation valves remain open to assist rapid depressurization of the reactor coolant system.

When reactor pressure drops to LPCI pump discharge pressure, a check valve in the injection line opens, admitting LPCI flow into the recirc pump discharge line. Although all four LPCI pumps start, only three are needed to deliver design flow. If neither loop is broken, a preselected loop will be used for injection.

6.4.4 BWR/4 ECCSs

The BWR/4 product line high pressure ECCSs consists of a HPCI system and an ADS. The low pressure ECCSs consists of a Core Spray System and a Residual Heat Removal System with a LPCI mode. The high pressure ECCSs are the same as the BWR/3 product line with the exception of the number of SRVs used for automatic depressurization. The Core Spray System is the same as a BWR/3 except for the initiation signals and number of pumps per loop. Initiation signals used for the low pressure ECCSs is high drywell pressure or low-low-low (level-1) vessel water level. The LPCI mode of the Residual Heat Removal System was divided into two separate and independent loops for most of the BWR/4s due to their higher power density cores and the need to meet the requirements of 10 CFR 50.46.

6.4.4.1 Residual Heat Removal System (LPCI Mode)

The RHR System, Figure 6.4-7 is a multipurpose system which has five operational modes, each with a specific purpose. The RHR system consists of two separate piping loops, designated system 1 and system 2. Each loop contains two pumps, two heat exchangers and associated piping, valves, and instrumentation.

The low pressure coolant injection (LPCI) mode is the dominate mode and normal valve lineup configuration of the RHR system. The LPCI mode operates automatically to restore and maintain, if necessary, the fuel clad temperature below 2200^{0}F. During LPCI operation, the RHR pumps take water from the suppression pool and discharge to the reactor vessel via their respective recirculation system discharge piping.

The exception to the above mode description is that two of the BWR/4 plants have four separate and independent LPCI loops which discharge directly into the reactor vessel shroud.

6.4.5 BWR/5 & BWR/6

The BWR/5 and BWR/6 product line ECCSs consists of a High Pressure Core Spray System, ADS, Low Pressure Core Spray System, and LPCI mode of the RHR System, Figures 6.4-8, 9 and 10. Due to the unreliability of the HPCI systems on earlier BWRs, the BWR/5 and 6 were designed with a motor driven high pressure make up system.

6.4.5.1 High Pressure Core Spray System

The High Pressure Core Spray (HPCS) System provides high pressure emergency core cooling for small, intermediate, and large line breaks. The HPCS System, shown in Figure 6.4-3 is a single loop system and consists of a suction shutoff valve, one motor drive pump, discharge check valve, motor operated injection valve, minimum flow valve, full flow test valve to the suppression pool, two high pressure flow test valves to the condensate storage tank, discharge sparger and associated piping and instrumentation. HPCS takes suction from the condensate storage tank or suppression pool and pumps the water into a sparger located on the upper core shroud. Spray nozzles mounted on the sparger are directed at the top of the fuel assemblies to remove decay heat following a loss of coolant accident (LOCA). The suppression pool is the alternate source of water for the HPCS system.

HPCS initiates automatically on either high pressure in the drywell or low water level in the reactor vessel (level-2). In the event HPCS is any mode other than standby and an automatic initiation signal is received, all valves realign for the injection mode of operation. Normal power for the HPCS system power is provided from the Standby Power System division 3 diesel generator.

6.4.5.2 Low Pressure Core Spray System

The low pressure core spray system is a single loop system and consists of a suction shutoff valve, one motor driven pump, discharge check valve, motor operated injection valve, minimum

flow valve, full flow test valve to the suppression pool, discharge sparger and associated piping and instrumentation. LPCS takes suction from the suppression pool and discharges the water through the core spray sparger ring directly on top of the fuel assemblies. This provides core cooling by removing the decay heat generated from the fuel bundles following a postulated loss of coolant accident.

The LPCS, along with other ECCSs, is automatically initiated by either high pressure in the drywell or a reactor water level-1. The motor operated valves automatically lineup for emergency mode of operation upon a system initiation signal regardless of the alignment unless the system has been removed from service for maintenance by closing the motor operated suction valve.

6.4.5.3 LPCI Mode of RHR System

The RHR System is a multipurpose system which has five operational modes, each with a specific purpose. The RHR system consists of three separate piping loops, designated A, B, and C. Loops A and B each have a pump and two heat exchangers. Loop C is used exclusively for LPCI mode and is not equipped with a heat exchanger.

The low pressure coolant injection (LPCI) mode is the dominate mode and normal valve lineup configuration of the RHR system. The LPCI mode operates automatically to restore and maintain, if necessary, the fuel clad temperature below 2200^{0}F. During LPCI operation, the RHR pumps take water from the suppression pool and discharge to the reactor vessel inside the core shroud via their own individual penetrations. The LPCI mode initiates automatically on either high pressure in the drywell or reactor vessel water level low (level-1). In the event the RHR system is any mode other than standby and shutdown cooling and an automatic initiation signal is received, all valves realign for the LPCI injection mode of operation.

6.4.6 ECCS Suction Strainers

In 1979, the NRC established USI A-43, "Containment Emergency Sump Performance," to study safety issues related to the ability of both PWRs and BWRs to recirculate water back to the reactor core following a postulated LOCA. The NRC staff's resolution of USI A-43 regarding the potential loss of post-LOCA recirculation capability due to intake blockage from dislodged insulation debris was transmitted to the industry in Generic Letter 85-22. "Potential for Loss of Post-LOCA Recirculation Capability Due to Insulation Debris Blockage," on December 3, 1985. In addition, the NRC staff recommended that Regulatory Guide 1.82, Revision 1, "Water Sources for Long-Term Recirculation Cooling Following a Loss-of-Coolant Accident," be used as a guideline for 10 CFR 50.59 reviews dealing with the change out and/or modification of thermal insulation installed in reactor coolant system piping and on its components.

On July 28,1992, a spurious opening of a safety valve at a Swedish BWR, resulted in the clogging of two ECCS pump suction strainers. During the restart activities, steam was released into the containment from a rupture disk on a safety relief valve that had been inadvertently left open. The release of steam dislodged mineral wool insulation, pieces of which were subsequently transported by the steam and water into the wetwell. Within one hour, the fibrous debris clogged the ECCS inlet strainers. This type of strainer clogging had been previously considered as a possibility, but it was believed that at least ten hours would have to elapse before clogging would occur.

The regulatory authorities of Sweden and other northern and central European countries viewed the incident as a precursor to potential loss of ECCS cooling due to LOCA-generated debris and initiated a safety reanalysis effort, coupled with experiments directed at establishing the following:

- the amount of insulation destroyed by steam jet created by pipe break, valve opening, etc.;

- the composition of the resulting debris;
- the amount of debris transported to the suppression pool;
- the extent of insulation debris buildup on strainers; and
- the resultant increase in pressure drop across the strainer under the postulated conditions.

Results of the European experiments were compared with results obtained for resolution of USI A-43. The comparison showed that prior correlations derived for debris head loss, when compared to Swedish experimental data and event, underestimated pressure losses.

Instances of clogging of ECCS pump strainers have also occurred at U.S. plants, including two events at Perry Nuclear Plant. The first event resulted in deformation of RHR pump suction strainers due to buildup of operational debris. This buildup caused an excessive differential pressure across the strainers. The second Perry event also involved the deposition of debris on the RHR pump suction strainers. The debris consisted of glass fibers that had been inadvertently dropped into the suppression pool from temporary drywell cooling filters; corrosion products and other materials filtered from the pool water by glass fibers adhering to the surface of the strainer. This phenomenon is referred to as "filtering" and had not been evaluated previously by the staff and industry.

Based on the new data, the NRC issued NRC Bulletin 93-02 on May 11, 1993, which requested that both PWR and BWR licensees:

- identify fibrous air filters and other temporary sources of fibrous material in containment not designed to withstand a LOCA, and
- take action to remove the material and ensure the functional capability of the ECCS.

On August 12, 1994, the NRC issued IN 94-57, "Debris in Containment and the Residual Heat Removal System," which alerted operating reactor licensees to additional instances of degradation of ECCS components because of debris. At River Bend Station, the licensee found a plastic bag on an RHR suction strainer. At Quad Cities Station, Unit 1, on July 14, 1994, the remains of a plastic bag were found shredded and caught within the anti-cavitation trim of an RHR test return valve. Subsequent to that event at Quad Cities, Unit 1, the licensee observed reduced flow from the C RHR pump upon further investigation, found a 10-cm (4in.) diameter wire brush wheel and a piece of metal wrapped around a vane of the pump.

On October 4, 1995, the NRC issued IN 95-47, "Unexpected Opening of a Safety/Relief Valve and Complications Involving Suppression Pool Cooling Strainer Blockage," Which discussed an event on September 11, 1995, at the Limerick Generating Station Unit 1, during which a safety/relief valve discharged to the suppression pool. The operators started an RHR pump in the suppression pool cooling mode. After 30 minutes, fluctuating motor current and flow were observed. Subsequent inspection of the strainers found them covered with "mat" of fibrous material and sludge (corrosion products). The licensee removed approximately 635 kg (1400 lb) of debris from the Unit 1 pool. A similar amount of debris had been removed earlier from the Unit 2 pool.

In BWRs that have carbon steel components, corrosion product particulate can be removed from suppression pools, but will be regenerated, overtime, at a rate of 10-100 kg/year. In addition, there are numerous sources of fibers in a BWR Drywell. Thermal insulation on pipe and equipment is an obvious source, but there are many others, such as protective clothing, welding fabric, fire protection materials and even human hair.

Recent studies have consistently shown that very small quantities of fibrous material (0.1 m^3) combined with 100 kg or so of particulate, enough to bring about RHR pump cavitation when collected on small passive strainers like those found in many of the world's BWR suppression pools.

Removing all sources of fibrous material from a pool is realistic and achievable. Guaranteeing that

all fibres have been removed from the drywell is not realistic, and even if there are just a few fibres the ECCS stainers can easily become blocked.

Based on the new data, the NRC issued NRC Bulletin 95-02 on October 17, 1995, which discussed the Limerick event and requested the BWR addressees review the operability of their ECCS pumps and other pumps that draw suction from the suppression pool while performing their safety function.

NUREG/CR-6224 was issued October of 1995, Parametric Study of the Potential for BWR ECCS Strainer Blockage Due to LOCA Generated Debris.

On May 6, 1996, the NRC issued Bulletin 96-03, "Potential Plugging of Emergency Core Cooling Suction Strainers by Debris in Boiling-Water Reactors," which requested actions by BWR addressees to resolve the issue of BWR strainer blockage because of excessive buildup of debris from insulation, corrosion products, and other particulates, such as paint chips and concrete dust. The bulletin proposed four options for dealing with this issue:

1. Install large capacity passive strainers,
2. Install self-cleaning strainers,
3. Install a safety related backflush system that relies on operator action to remove debris from the surface of the strainer to keep it from clogging, or
4. Propose another approach that offers an equivalent level of assurance that the ECCS will be able to perform its safety function following a LOCA.

The most practical and cost effective of the mechanical solutions is to replace the existing small passive suction strainers with large passive strainers. The modification represents the simplest, the most reliable, and the least disruptive option. The conclusion that large suction strainers are necessary is inescapable, especially when it is recognized that only a thin layer of fibrous material, combined with a relatively small quantity of particulate, is required to bring about ECCS pump cavitation at most of the world's BWRs.

6.4.6.1 Large Capacity Strainers

Figures 6.4-11, 12, 13, and 14 illustrate the large capacity passive strainers that have been or are going to be installed in the suppression pool.

The new passive strainer, Figure 6.4-11, being installed at BWRs, in all three types of containments, increases the surface area from approximately 9 ft^2 to 108 ft^2. The strainers measure approximately three and one half feet in height and five feet in diameter. The uppermost stacked disc measures two inches in thickness and contains perforations on both surfaces. The remaining thirteen discs are one inch in thickness with perforations on both surfaces. The center section is truncated to provide a mounting platform for the stacked disc and provide additional surface area. The stacked disc sections are held in place by vertical stiffener bars spaced at even intervals.

Figure 6.4-12 represents the passive strainers being installed in some Mark I containments that have an ECCS suction ring header that is located below the suppression chamber. Dresden installed the strainer, illustrated in figure 6.4-12, that consists of 16 evenly spaced double faced stacked discs. The strainer measures approximately 5 feet in length and 32 inches in diameter. This type of strainer has a surface area of 118 ft^2. In addition to the stacked disc strainers, stiffeners are located 72° apart to provide rigidity to the strainer assembly.

Figure 6.4-13 represents the passive strainers being installed at Monticello's Mark I containment that have an ECCS suction ring header located below the suppression chamber. This type of strainer has a surface area similar to the other styles being installed in the Mark I containments, approximately 100 ft^2.

Figure 6.4-14 represents the passive strainers being installed in most Mark III containments. This is the largest of the passive suction strainers being installed. The strainer completely encircles the drywell within the suppression pool. The strainer has an outer radius of 62 feet and measures approximately 389 feet in circumference. The strainer is supported by support legs that lift the strainer off of the floor of the suppression pool approximately 6 inches to expose square perforations in the bottom of the strainer assembly. Low pressure ECCSs take suction form the middle section while High Pressure Core Spray and the Reactor Core Isolation Cooling System remove water form the first strainer cavity. To reach the center section water must pass through the outer most strainer and then the rectangular center section strainer.

6.4.6.2 Core Damage Frequency Estimates

To gain additional insights into the potential safety significance to ECCS NPSH loss, Core Damage Frequency (CDF) estimates were calculated for flow blockage related BWR accident sequences in NUREG/CR-6224. The reference design used was a BWR/4 with a Mark I containment design. The CDF estimates were limited to large break LOCA initiators having a diameter ≥6" (15.2 cm). The large break initiator was selected because smaller breaks were less likely to result in loss of ECCS NPSH. Smaller break sizes could be mitigated by the HPCI and RCIC systems, both of which take their initial supplies from the condensates storage system. During the time one of these systems is being used, the potential for strainer blockage would be eliminated by pump suction form the condensate storage system. Once condensate storage system levels have dropped sufficiently to require switchover to the suppression pool, reactor decay heat levels would be substantially reduced. If loss of NPSH occurs following switchover, the reduced decay heat levels would allow operators additional time for implementing corrective actions.

Accident Sequence Results

There are 7 core damage sequences related to NPSH loss that can potentially contribute to core damage. These sequences, CD-2 through 8, together with corresponding point-estimate frequency estimates, are shaded in the right-hand portion of Figure 4.12-4. Note that all 7 of these core damage sequences involve successful reactor scram, early containment vapor suppression, and ECCS initiation. In addition, all of these sequences involve a subsequent common cause NPSH loss that affects the ECCS (LPCS and RHR) pumps.

Sequence CD-2 includes successful operator recognition of strainer blockage, combined with successful back flushing of strainers to restore operation of the ECCS pumps. However, following bask flush operation, torus cooling is not established and operators subsequently fail to protect the integrity of the containment structure by venting. As a result, the ECCS is postulated to fail and core damage results. Because there is currently no means for operators to perform the required back flush operation, this sequence frequency is zero.

Sequences CD-3, CD-4, and CD-5 involve successful operator recognition of strainer blockage coupled with failure to use a back flush operation to restore the operability of the ECCS pumps. In sequence CD-3, operators successfully established an alternate injection source of cooling. Though torus cooling cannot be established because the RHR pump NPSH remains lost, operators are successful in maintaining containment structure integrity by manually venting. Even though subsequent overfill is postulated to lead to core damage, this situation was considered to be very unlikely during the 24-hour mitigating system mission time. Consequently, the frequency established for CD-3 is negligible.

In sequence CD-4, an alternate injection source for core cooling is successfully established, but torus cooling cannot be established because the RHR pump NPSH remains lost. The integrity of containment is lost because the operators are

unsuccessful in manually venting containment. Consequently, core cooling is postulated to be lost. This sequence was established to have a point value frequency of 3.3E-08/Rx-yr. Sequence CD-5 involves the failure to establish an alternate injection source following loss of ECCS pumps to strainer blockage. The point value of this sequence was established to be 5.0E-06/Rx-yr.

Sequences CD-6, CD-7, and CD-8 involve the failure of the operator to recognize strainer blockage, while loss of the ECCS pump NPSH eventually causes core cooling to fail. In sequence CD-6, operators successfully establish an alternate injection source for core cooling. Though torus cooling cannot be established because of the RHR pump NPSH remains lost, operators are successful in maintaining the containment structure integrity by manually venting. Again, even though subsequent containment overfill is postulated to lead to core damage, this situation was considered to very unlikely during the 24-hour mitigating system mission time. Consequently, the frequency estimate for this sequence is also negligible.

In sequence CD-7, an alternate injection source for core cooling is successfully established, but torus cooling cannot be established because the RHR pump NPSH remains lost. The integrity of containment is lost because the operators are unsuccessful in manually venting containment. Consequently, core cooling is postulated to be lost. This sequence was estimated to have a point value frequency of 1.3E-07/Rx-yr. Sequence CD-8 involves the failure of the operators to establish an alternate injection source following loss of the ECCS pumps TO NPSH loss. The point value of this sequence was estimated to the 2.0E-05/Rx-yr.

As shown in Figure 6.4-14, the sum of the point value frequency estimates for the 7 core damage sequences involving NPSH loss is 2.5E-05/Rx-yr. The two dominate sequences, CD-5 and CD-8, involve the failure of the operators to establish alternate core cooling following the loss of ECCSs. Together, these two sequences represent approximately 99% of the total NPSH loss core damage frequency estimates. The point value core damage frequency estimate related to ECCS NPSH loss for the overall plant, 2.5E-05/Rx-yr, is over 3 times the overall core damage frequency of 7.8E-06/Rx-yr estimate in the reference plant IPE.

The conditional probability of core damage following a large LOCA was calculated to be 0.25 by dividing the core damage frequency estimate (2.5E-05/Rx-yr) by the initiator frequency (1.0E-04/Rx-yr). In other words, given a large LOCA initiator, core damage from ECCS NPSH loss is estimated to occur 25% of the time at the reference plant.

Extrapolation of the Reference Plant Results to Other BWRs

The contribution of NPSH loss to BWR core damage frequency may vary significantly among plants because of differences in design and accident mitigation features. At BWR/5 and 6 plants, an automatically actuated High Pressure Core Spray (HPCS) system is available for mitigation of any size break. This system is available in addition to other large LOCA mitigating systems, specifically the low pressure core spray system and the low pressure coolant injection mode of the residual heat removal system, initially taking suction from the condensate storage system. The availability of an automatically actuated HPCS at BWR/5 and 6 plants would delay the potential ECCS blockage until switchover to the suppression pool. Even if ECCS NPSH loss takes place after the switchover, the reduced decay heat levels would provide operators with additional time for implementing alternate sources of core cooling. Given the above assumption, BWR/5 and 6 plants involving ECCS NPSH have the potential to be lower than corresponding core damage frequencies estimates for the reference plant.

6.4.7 Summary

The Emergency Core Cooling System (ECCS) package provided by a particular product line is dependent on the vintage of the plant and the regulations during that period of time. In all cases there are high pressure and low pressure ECCSs. The Automatic Depressurization System is functionally the same for all facilities. All BWRs have a Core Spray System, but only the BWR/5s and 6s have both a high and low pressure Core Spray System. Early BWR/3s were designed with a separate Low Pressure Coolant Injection (LPCI) System. Later BWR/3s changed to a Residual Heat Removal System that consisted of many modes, one of them being LPCI.

High pressure ECCSs did not exists for the early BWRs. Modifications were required by the NRC to upgrade their feedwater pumps. The modifications consisted of having two power sources available. Later BWR/3s were designed with a High Pressure Coolant Injection System that was replaced in the BWR/5 design with a more reliable motor driven High Pressure Core Spray System.

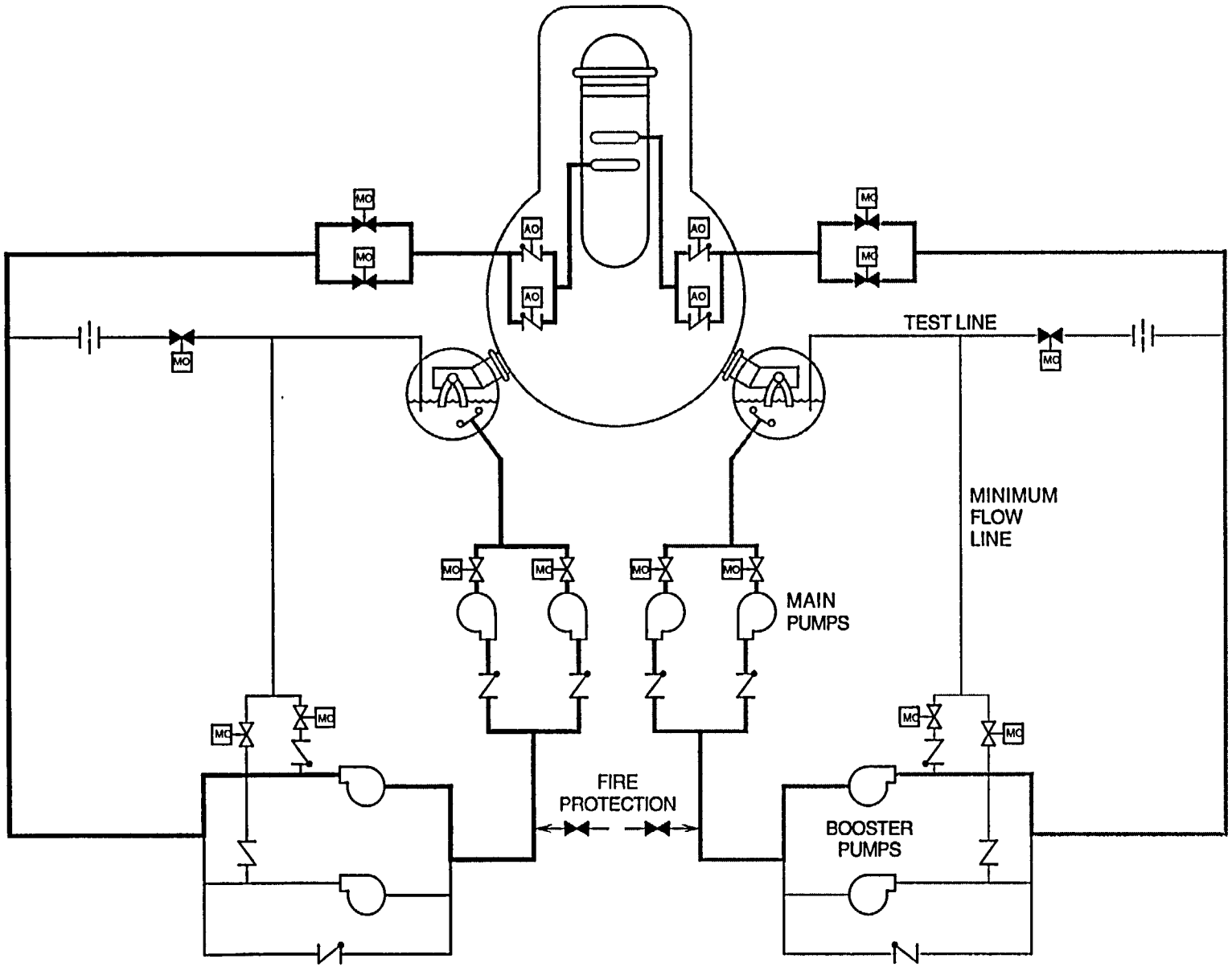

Figure 6.4-1 BWR/2 Core Spray System

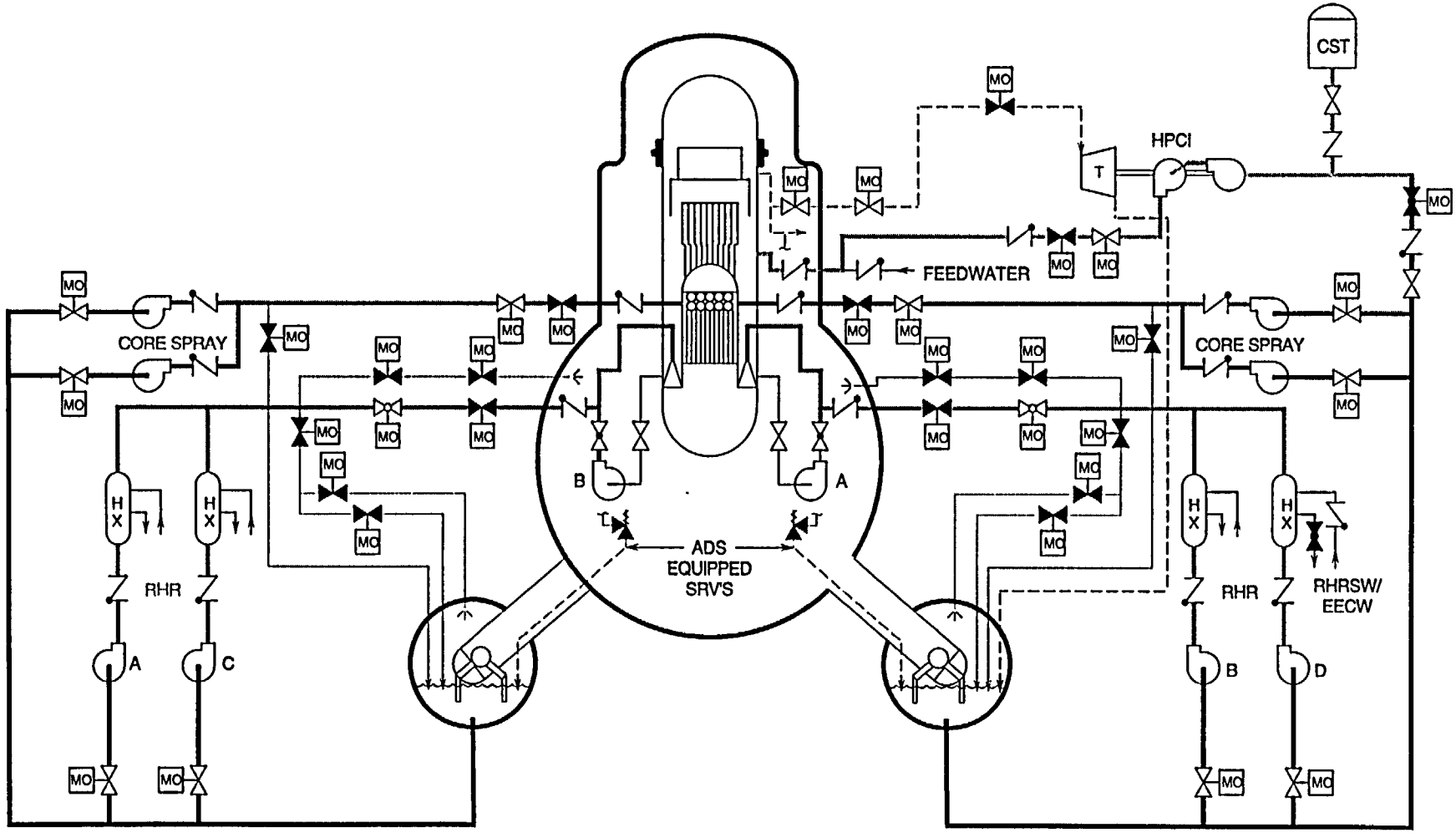

Figure 6.4-2 Typical ECCS's for BWR/3/4

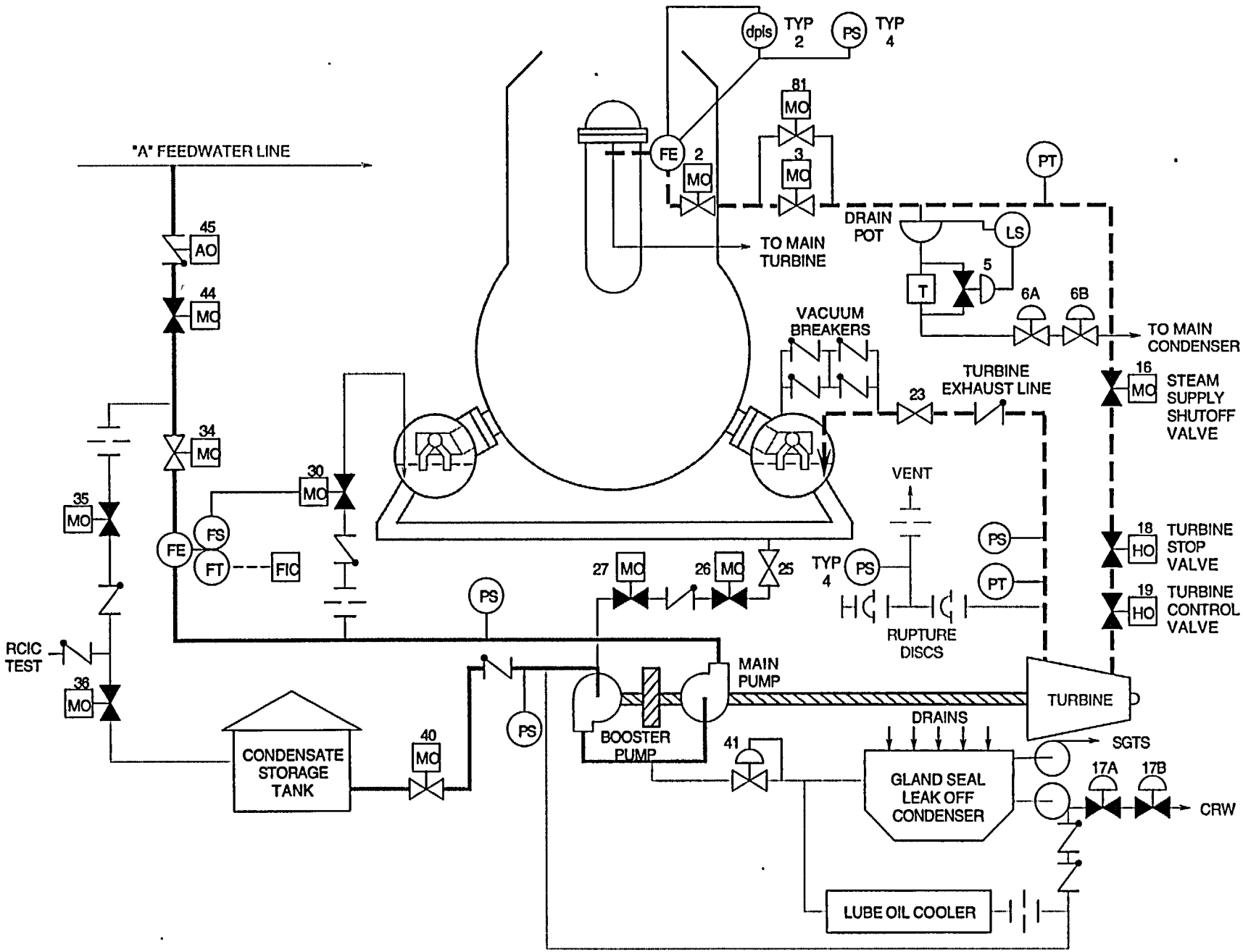

Figure 6.4-3 High Pressure Coolant Injection System

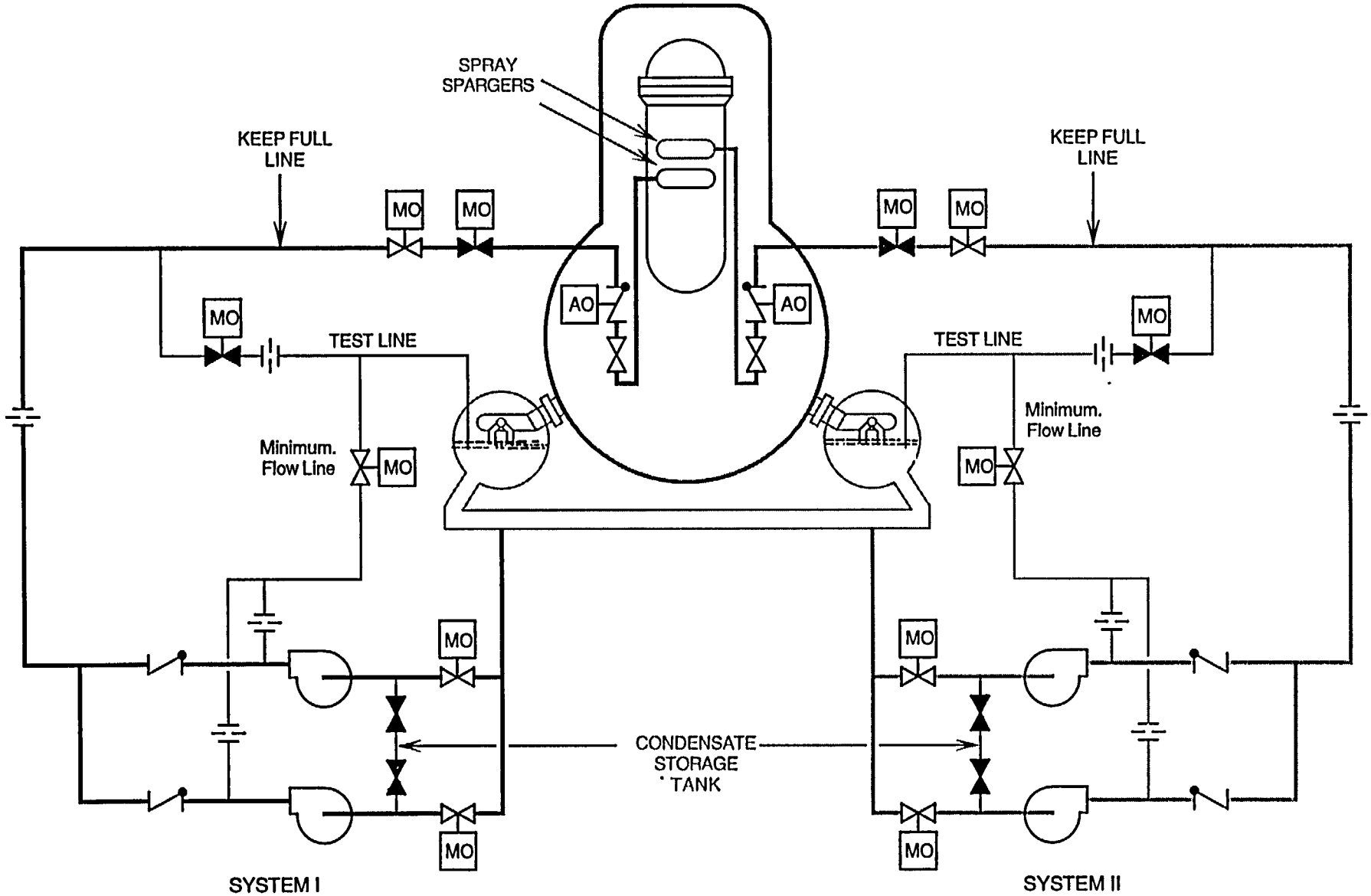

Figure 6.4-4 Core Spray System (BWR/3/4)

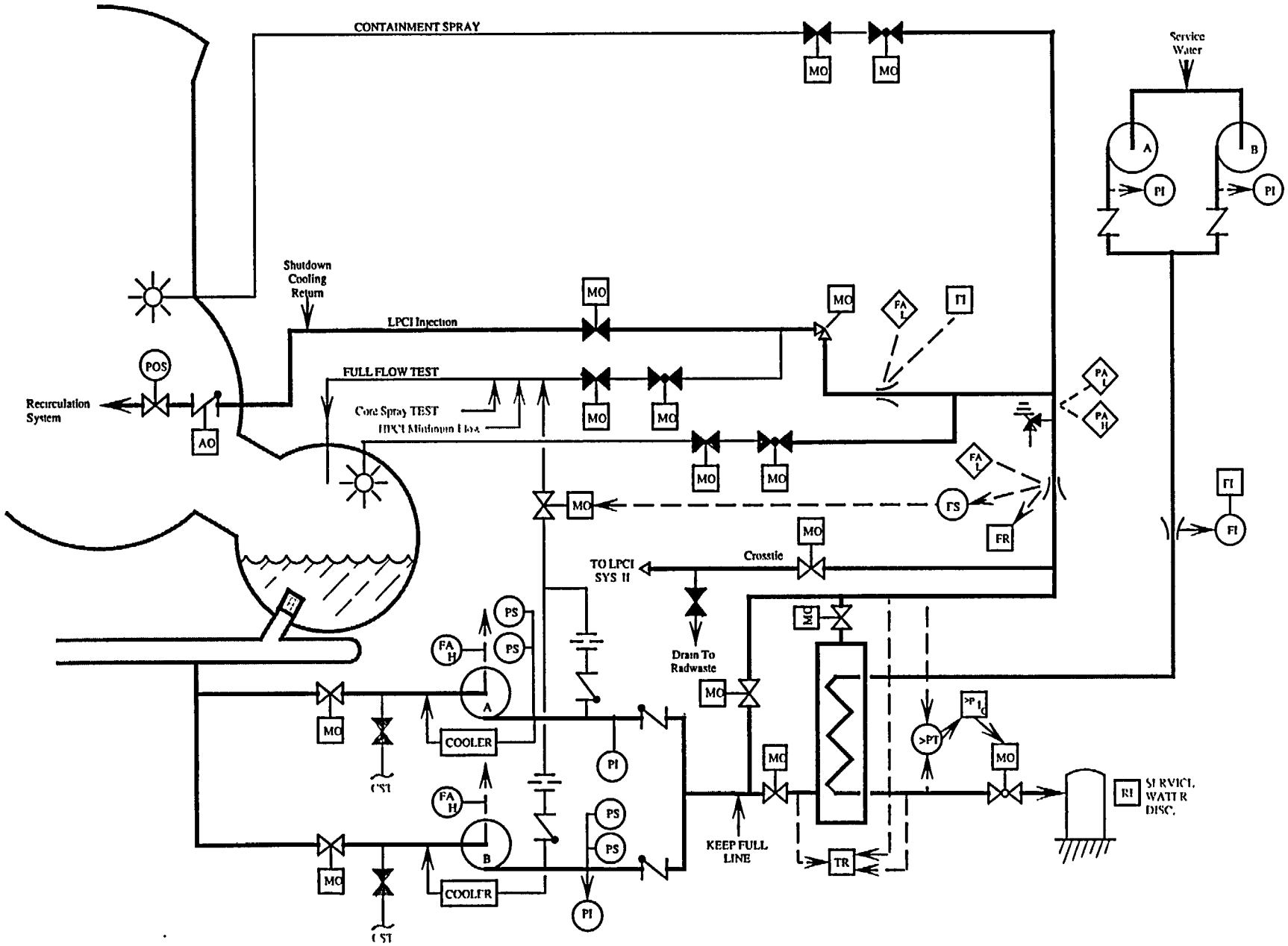

Figure 6.4-5 LPCI System BWR/3 & some BWR/4's

0597

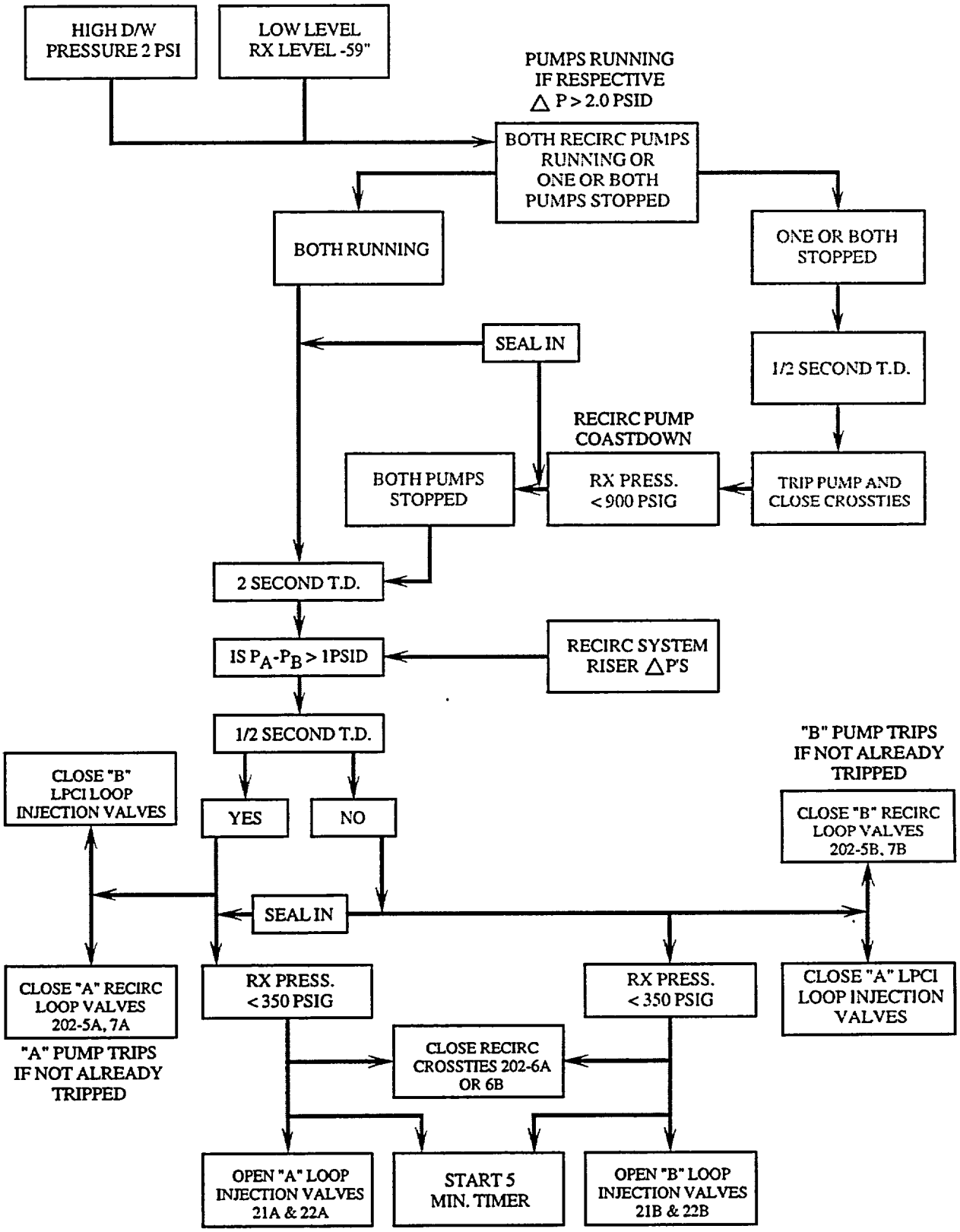

Figure 6.4-6 LOCI Loop Selection Logic

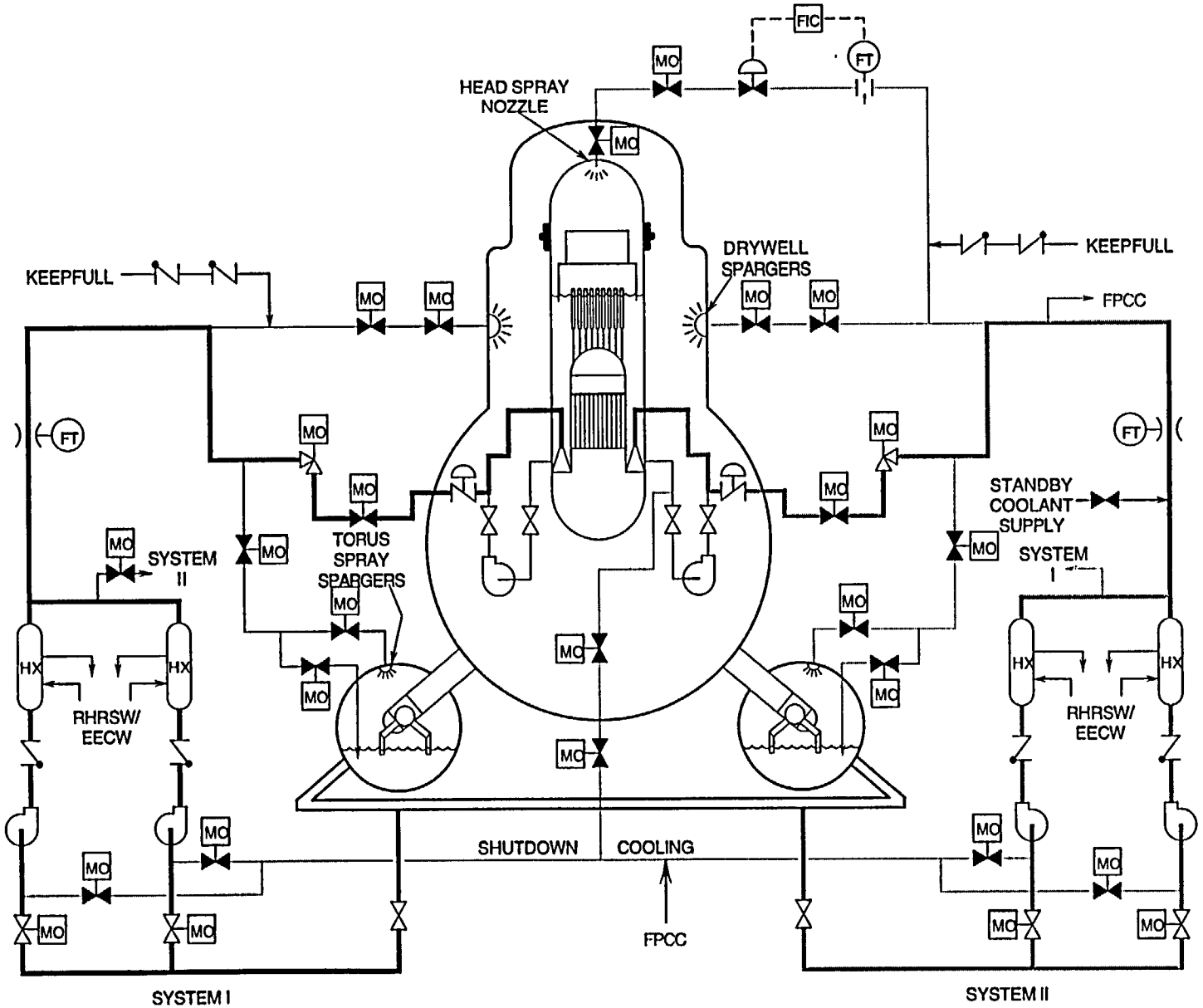

Figure 6.4-7 Residual Heat Removal System

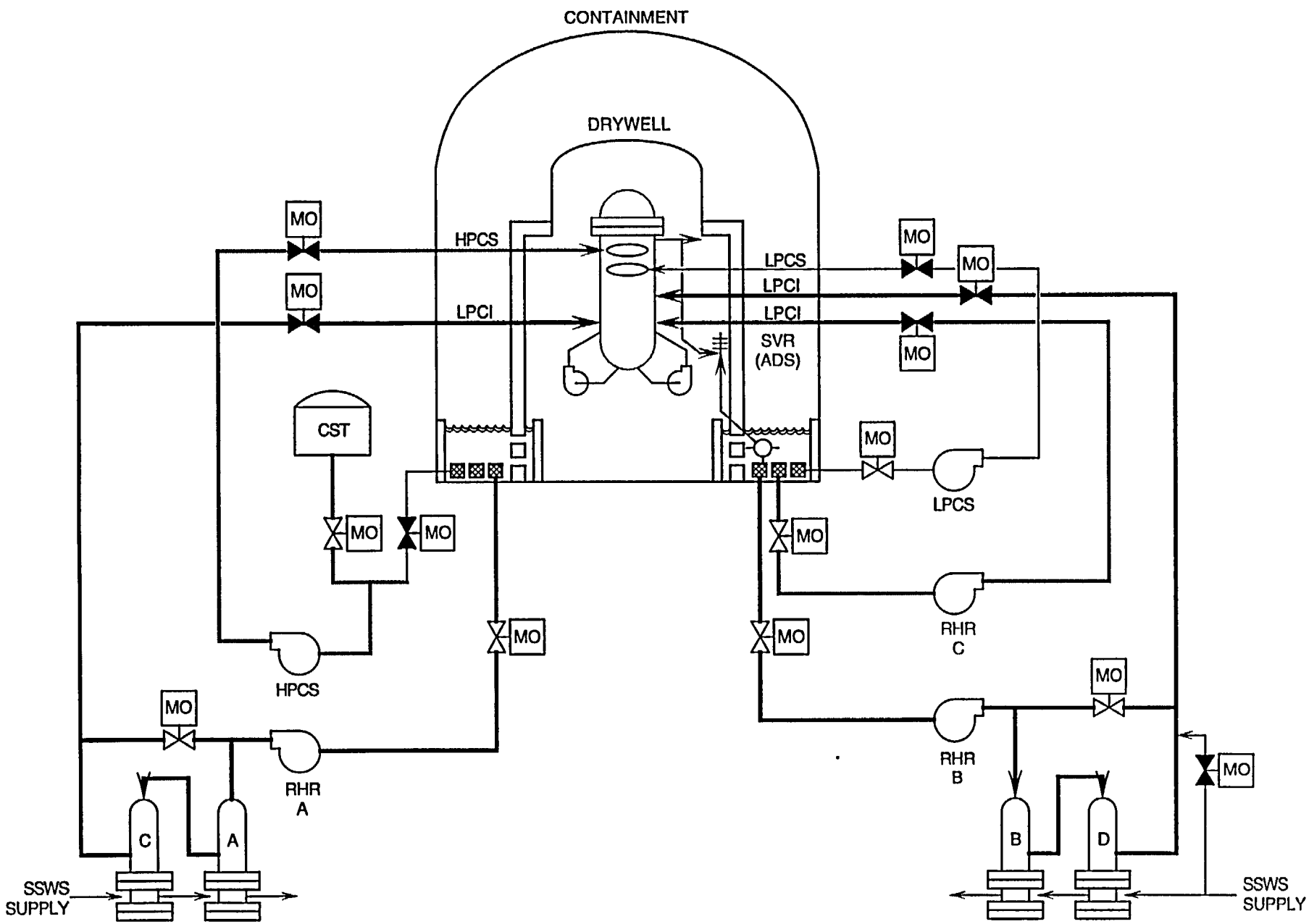

Figure 6.4-8 Typical ECCS BWR/5 & BWR/6

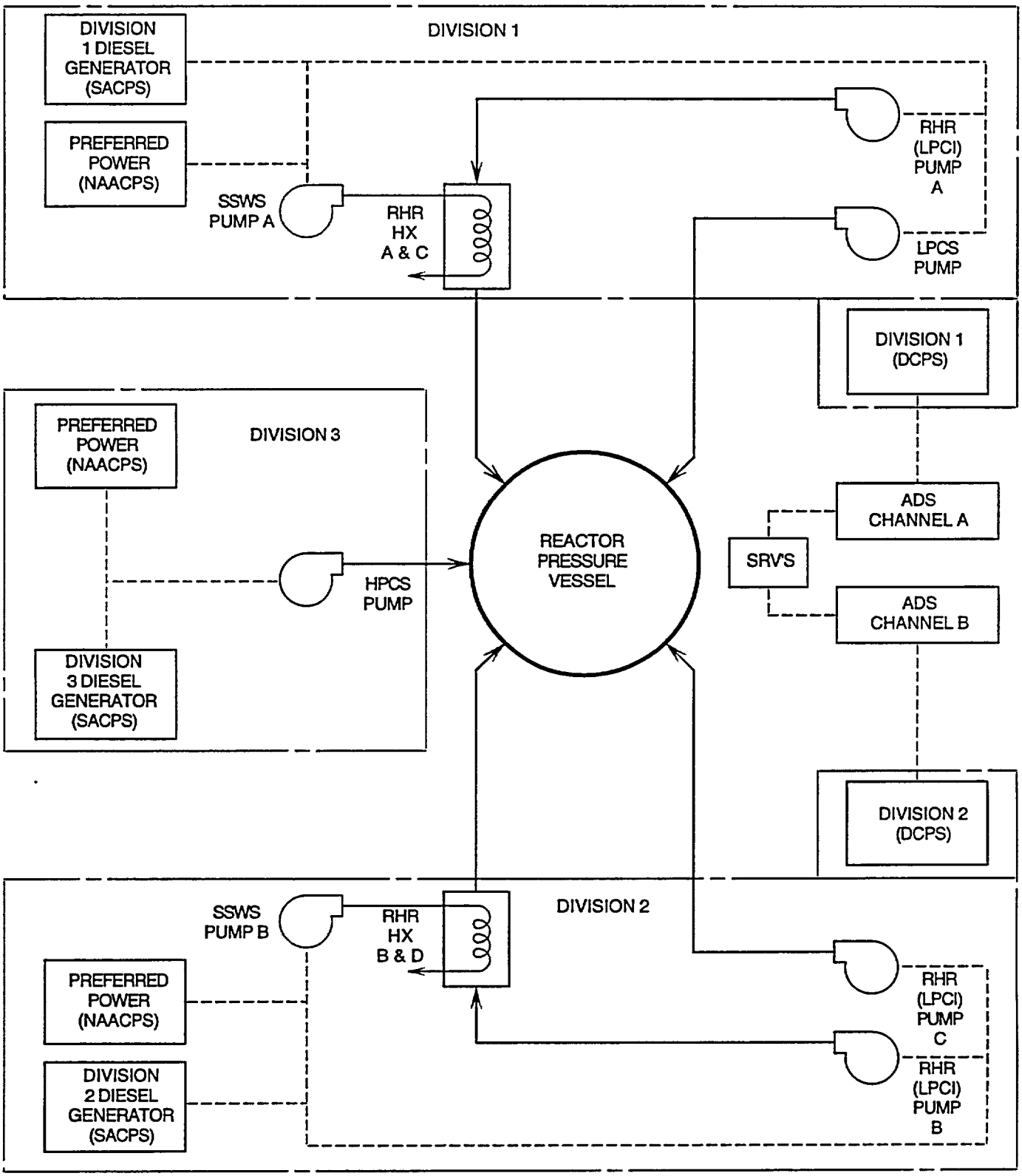

RHR—RESIDUAL HEAT REMOVAL
HPCS—HIGH PRESSURE CORE SPRAY
SSWS—STANDBY SERVICE WATER

LPCS—LOW PRESSURE CORE SPRAY
LPCI—LOW PRESSURE COOLANT INJECTION MODE OF RHR

------ ELECTRICAL
——— PIPING

Figure 6.4-9 ECCS Divisional

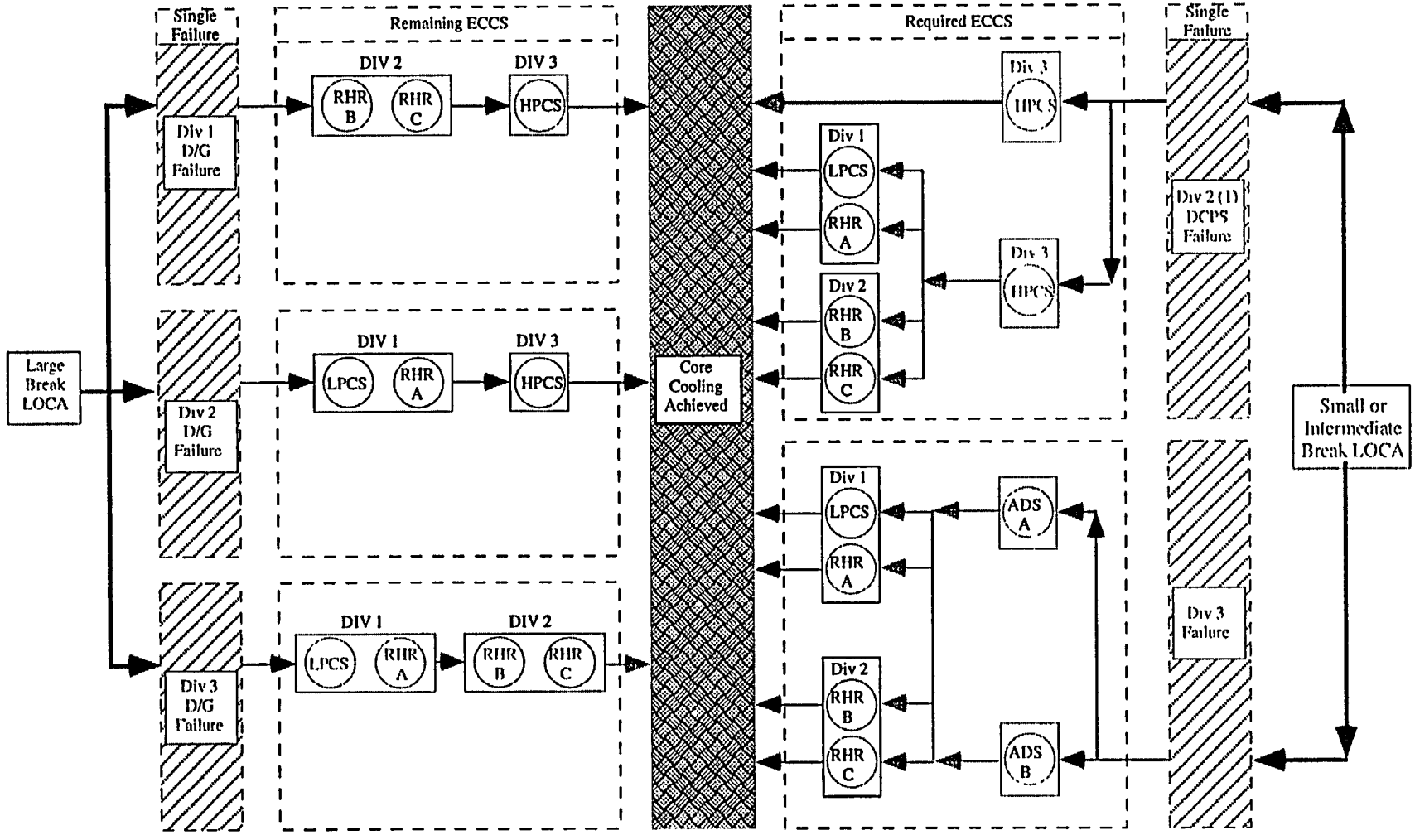

Figure 6.4-10 ECCS Integrated Performance

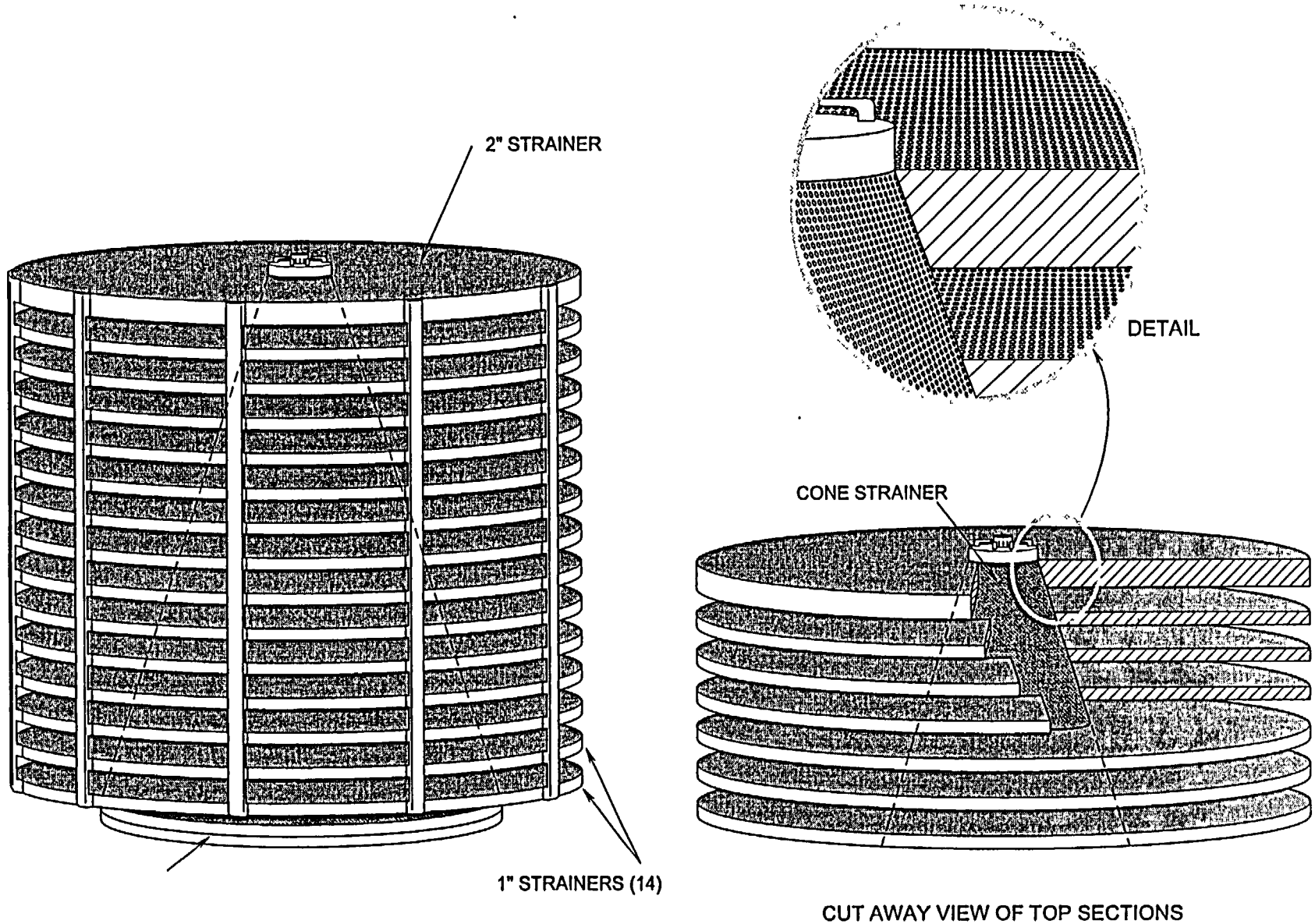

Figure 6.4-11 Strainer Assembly

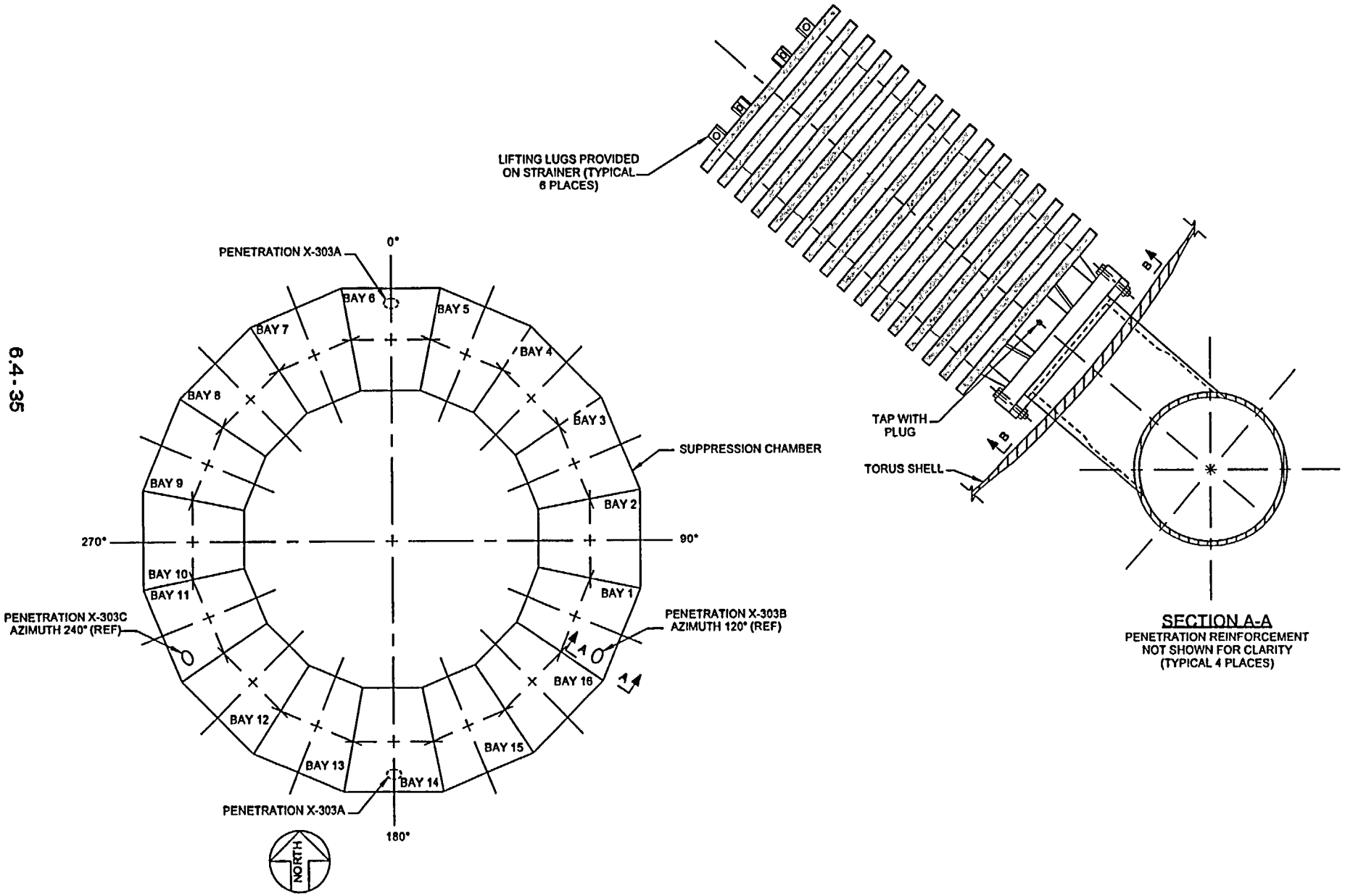
LIFTING LUGS PROVIDED ON STRAINER (TYPICAL 6 PLACES)
TAP WITH PLUG
TORUS SHELL
SECTION A-A
PENETRATION REINFORCEMENT NOT SHOWN FOR CLARITY (TYPICAL 4 PLACES)
PENETRATION X-303A
0°
90°
180°
270°
BAY 1
BAY 2
BAY 3
BAY 4
BAY 5
BAY 6
BAY 7
BAY 8
BAY 9
BAY 10
BAY 11
BAY 12
BAY 13
BAY 14
BAY 15
BAY 16
SUPPRESSION CHAMBER
PENETRATION X-303B AZIMUTH 120° (REF)
PENETRATION X-303C AZIMUTH 240° (REF)
PENETRATION X-303A
NORTH

Figure 6.4-12

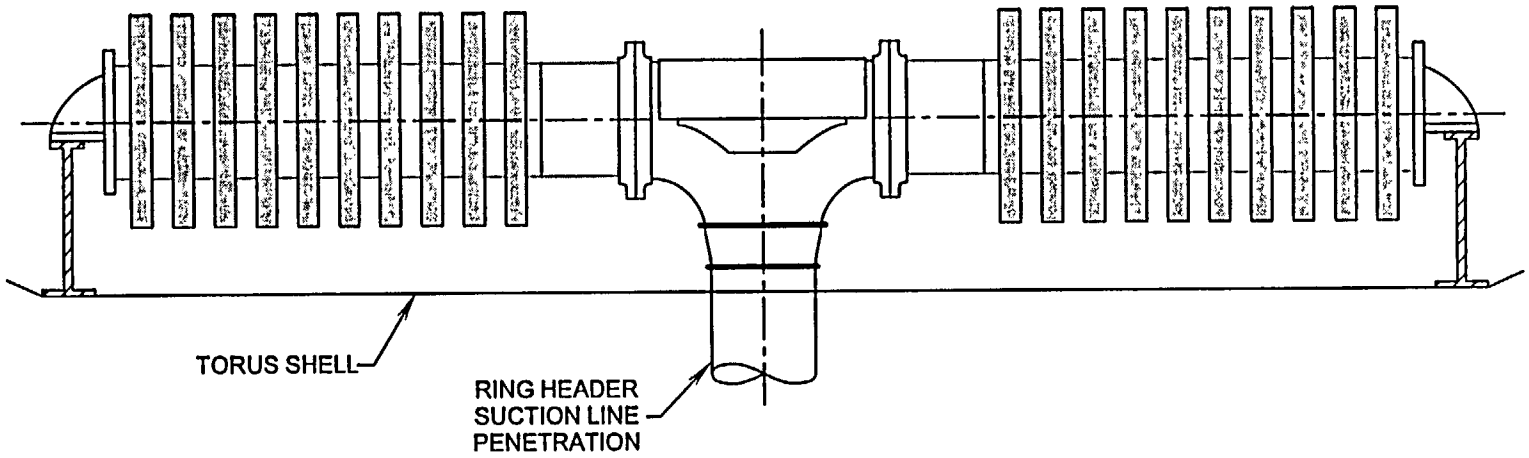

Figure 6.4-13 ECCS Suction Strainer Assembly

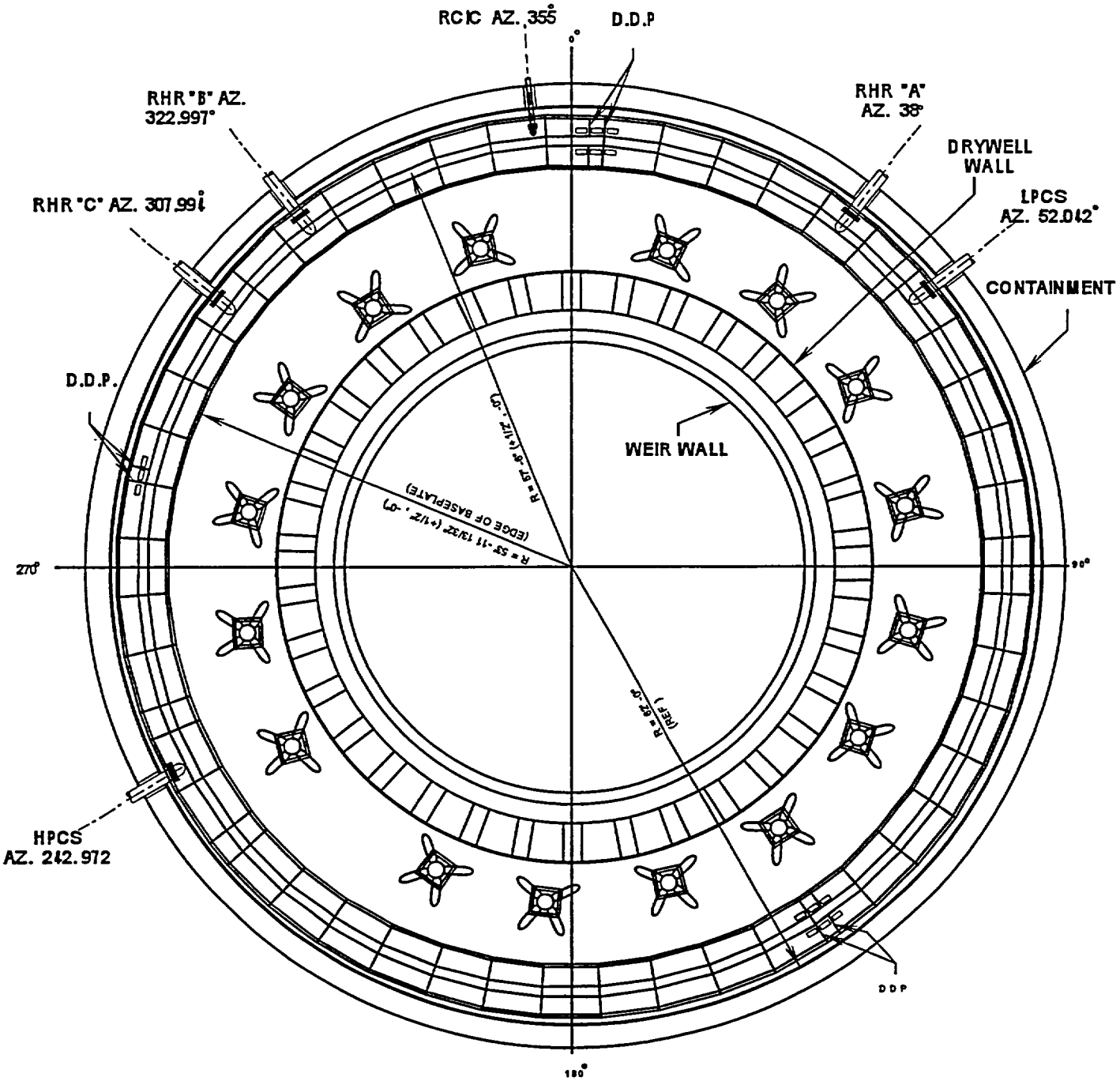

Figure 6.4-14 Mark III Strainer (Clinton)

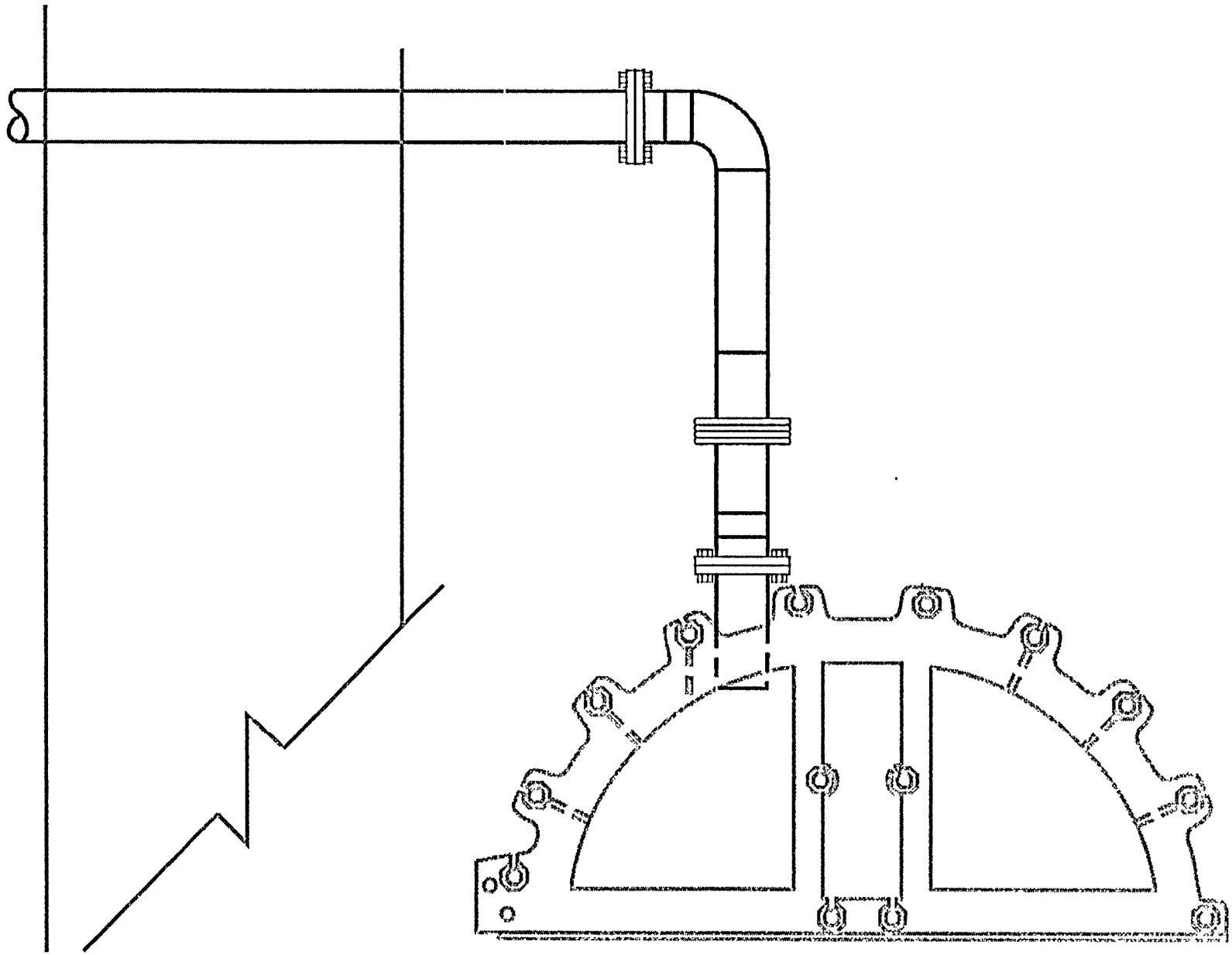

Figure 6.4-15 RCIC Suction Mark III Containment

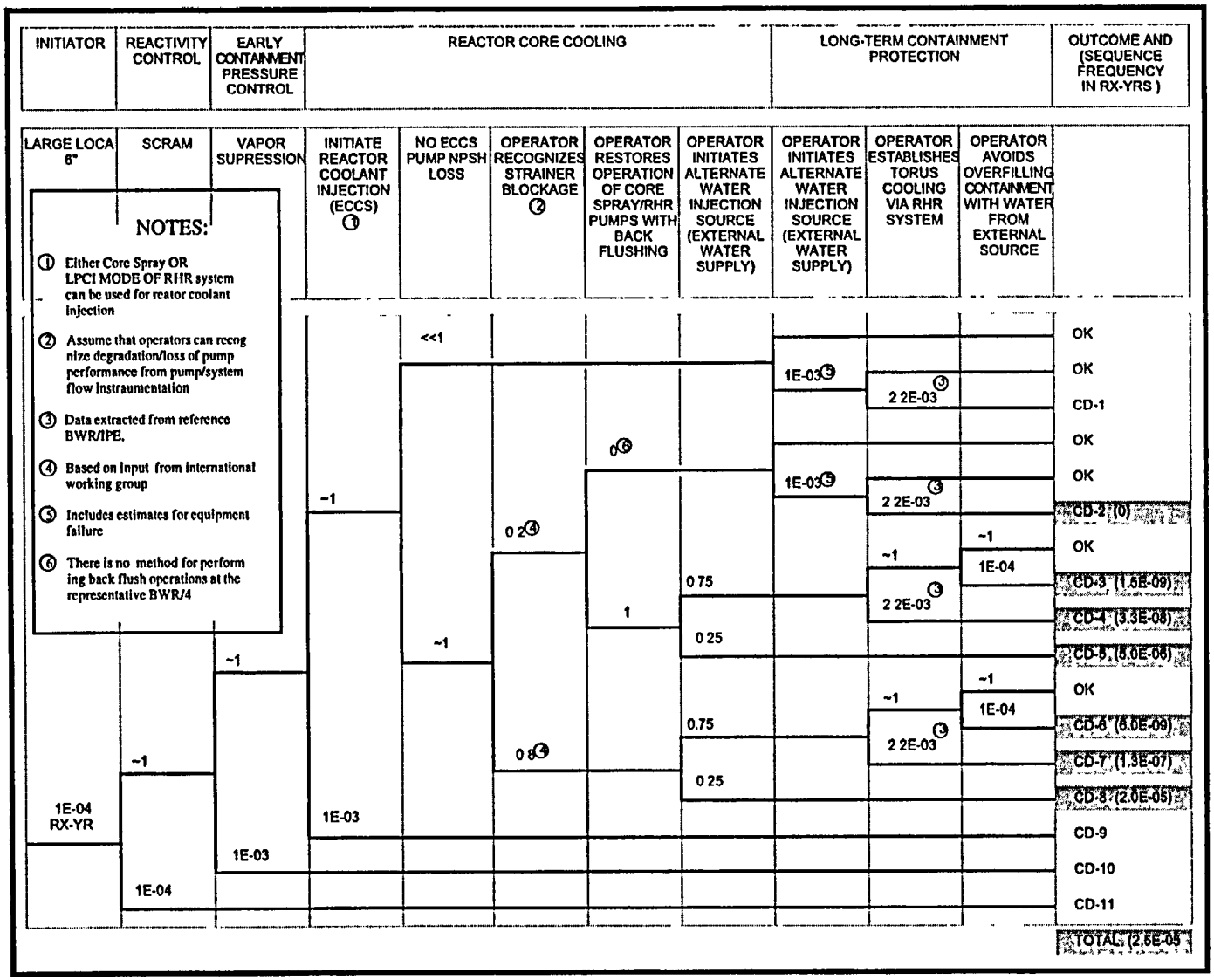

Figure 6.4 - 16 Simplified Event Tree For Large LOCA

Table of Contents

List of Tables

List of Figures

6.5 PRIMARY CONTAINMENTS

Learning Objectives :

1. State the purpose of the primary containment system.

2. Explain the multibarrier, pressure suppression concept as applied to each containment package.

3. Explain the response of the primary containments to a major LOCA.

4. Explain how post LOCA hydrogen gas evolution is controlled for each containment package.

6.5.1 Introduction

The primary containment package provided for a particular product line is dependent on the vintage of the plant and the cost-benefit analysis at the time. During the evolution of the Boiling Water Reactor, three major types of containments were built. The major containment designs are the Mark I, Mark II, and Mark III. Unlike the Mark III, that consists of a primary containment and a drywell, the Mark I and Mark II designs consist of a drywell and wetwell (suppression chamber). All three primary containment designs use the principle of pressure suppression for loss of coolant accidents. For comparison of containments see Table 6.5-1.

Each of the containment designs performs the same functions:

- Condenses steam and contains fission products released from a LOCA so that the off site radiation doses specified in 10 CFR 100 are not exceeded.
- Provides a heat sink for certain safety related equipment.
- Provides a source of water for emergency core cooling systems and the Reactor Core Isolation Cooling System.

6.5.2 Mark I Containment

The Mark I containment design consists of several major components, many of which can be seen in Figure 6.5-1. These major components include the drywell, which surrounds the reactor vessel and recirculation loops; a suppression chamber, which stores a large body of water (the suppression pool); and an interconnecting vent network between the drywell and the suppression chamber. Additionally, there are numerous auxiliary systems associated with the primary containment that are required to meet its intended function.

6.5.2.1 Component Description

The major components of the primary containment system are discussed in the paragraphs that follow.

Drywell

The purposes of the drywell are to contain the steam released from a loss of coolant accident (LOCA) and direct it to the suppression chamber, and to prevent radioactive materials from passing through its portion of the primary containment boundary.

The drywell is a steel pressure vessel with a spherical lower portion and cylindrical upper portion. The top head closure is made with a double tongue and groove seal which permits periodic checks for tightness without pressurizing the entire vessel. Bolts secure the drywell head to the cylindrical section during conditions that require primary containment integrity. The drywell is enclosed by reinforced concrete for shielding and for additional resistance to deformation and buckling over areas where the

concrete backs up the steel shell. Above the foundation, the drywell is separated from the reinforced concrete by a gap of approximately two inches for thermal expansion. Shielding over the top of the drywell is provided by removable, segmented, reinforced concrete shield plugs. In addition to the drywell head, one double door personnel air lock and two bolted equipment hatches are provided for access to the drywell.

Suppression Chamber

The suppression chamber consists of a steel pressure vessel with a toroidal shape (sometimes referred to as a torus) and a large body of water inside the suppression chamber (referred to as the suppression pool). The purposes of the suppression chamber are to condense steam released from a LOCA and to prevent radioactive materials from passing through this portion of the primary containment boundary.

The purposes of the suppression pool are as follows: to serve as a heat sink for LOCA blowdown steam; to serve as a heat sink for safety/relief valve discharge steam and to serve as a heat sink for high pressure coolant injection (HPCI) system and reactor core isolation cooling (RCIC) system turbine exhaust steam; to provide a source of water for the low pressure coolant injection (LPCI) mode of the residual heat removal (RHR) system, core spray system, HPCI system, and RCIC system,

The suppression chamber is located radially outward and downward from the drywell and is held on supports which transmit vertical and seismic loading to the reinforced foundation slab of the reactor building.

Access to the suppression chamber is provided through two manways with double gasket bolted covers. These access ports (manways) are bolted closed when primary containment integrity is required and can be opened only when primary coolant temperature is below 212°F and the pressure suppression system is not required to be operational.

Interconnecting Vent System

The interconnecting vent network is provided between the drywell and suppression chamber to channel the steam and water mixture from a LOCA, to the suppression pool and allow noncondensible gases to be vented back to the drywell. Eight large vent pipes (81" in diameter) extend radially outward and downward from the drywell into the suppression chamber. Inside the suppression chamber the vent pipes exhaust into a toroidal vent header which extends circumferentially all the way around the inside of the suppression chamber. Extending downward from the vent header are ninety-six downcomer pipes which terminate about three feet below the suppression pool minimum water level. Jet deflectors are provided in the drywell at the entrance to each vent pipe to prevent possible damage to the vent pipes from jet forces which might accompany a line break in the drywell. The vent pipes are provided with expansion joints to accommodate differential motion between the drywell and suppression chamber.

Vacuum Relief System

There are two vacuum relief networks associated with preventing the primary containment from exceeding the design external pressure of 2 psi. The first vacuum relief network consists of a set of twelve self actuating swing check valves. These suppression chamber to drywell vacuum relief valves vent noncondensible gases from the suppression chamber to the drywell whenever suppression chamber pressure exceeds drywell pressure by 0.5 psid. The second vacuum relief network consists of a set of two vacuum relief lines from the reactor building (secondary containment) to the suppression chamber. Each line contains a self actuated check valve and an air operated butterfly type vacuum breaker in series. These reactor building to suppression chamber

vacuum relief lines vent air from the reactor building to the suppression chamber whenever reactor building pressure exceeds suppression chamber pressure by 0.5 psid.

The suppression chamber to drywell vacuum breakers are remotely tested by using air cylinder actuators. Testing of the suppression chamber to reactor building vacuum breakers is accomplished by testing the equipment which automatically opens the air operated butterfly valves and manually exercising the check valves.

Drywell Cooling System

During normal plant operation there is a closed atmosphere within the drywell and the suppression chamber. Since the reactor vessel is located within the drywell, heat must be continuously removed from the drywell atmosphere. Drywell temperature is maintained between 135^{0}F and 150^{0}F by operating drywell cooling units. Each cooling unit consists of a motor driven fan which blows the existing drywell atmosphere (either nitrogen gas or air) past a heat exchanger which is cooled by the reactor building closed cooling water (RBCCW) system or an equivalent system.

Primary Containment Ventilation System

The purpose of the primary containment ventilation system is to allow for influent air to be brought into the drywell and suppression chamber and for effluent atmosphere to be discharged from the drywell and suppression chamber. This system uses connections to the reactor building heating, ventilation, and air conditioning (HVAC) system for influent air. Connections to the reactor building via the primary containment purge system and to the standby gas treatment system (SGTS) are used for effluent atmosphere. The reactor building HVAC system is used to supply filtered and temperature controlled outside air to the primary containment for air purge and ventilation purposes to allow for personnel access and occupancy during reactor shutdown and refueling operations. The purge exhaust air is either removed by the primary containment purge system and discharged to the atmosphere via the reactor building HVAC system exhaust fans or removed by the standby gas treatment system and discharged to the atmosphere via the plant stack. In either case the effluent is treated prior to release.

Containment Inerting System

The purpose of the containment inerting system is to create and maintain an inerted atmosphere of nitrogen gas inside the primary containment during normal plant power operation. It is necessary to inert the primary containment atmosphere with nitrogen gas in order to maintain the primary containment oxygen concentration less than 4%. Starting with an inerted atmosphere is important in preventing an explosive mixture of hydrogen and oxygen in the primary containment atmosphere following postulated loss of coolant accidents with postulated hydrogen generation.

The containment inerting system consists of a nitrogen (N_2) purge supply and a nitrogen (N_2) makeup supply. The N_2 purge supply is used to initially create the inerted atmosphere in the primary containment. Nitrogen purge systems consist of a liquid nitrogen storage tank, a steam vaporizer (to convert liquid nitrogen to the gaseous state), and associated valving and piping to deliver nitrogen to the primary containment influent ventilation lines. Nitrogen gas is supplied to the primary containment through the purge supply at a rate of 3000-4500 scfm while primary containment atmosphere is discharged to the reactor building HVAC system exhaust ventilation duct or to the standby gas treatment system. This process continues until primary containment oxygen concentration is less than 4%, which takes approximately four hours and requires three to five containment atmosphere volumetric changes.

After the inerted atmosphere has been created,

the nitrogen makeup supply is used to continue to supply nitrogen gas as required by temperature changes and leakage. The primary containment is held at a slight positive pressure by the makeup supply and uses the same liquid nitrogen storage tank, its own vaporizer, and valving and piping to deliver nitrogen gas at a rate of <60 scfh to the primary containment.

Containment Atmosphere Dilution System

The purpose of the containment atmosphere dilution (CAD) system is to control the concentration of combustible gases in the primary containment subsequent to a loss of coolant accident with postulated high hydrogen generation rates. The CAD system is capable of supplying nitrogen gas at a rate sufficient to maintain the oxygen concentrations of both the drywell and suppression chamber atmospheres below 5% by volume based on the hydrogen generation rate associated with a 5% metal-water reaction.

The CAD system nitrogen supply facilities shown in some detail in figure 6.5-2, include two separate trains, each of which is capable of supplying nitrogen through separate piping systems to the drywell and suppression chamber. Each train includes a liquid nitrogen supply tank, an ambient vaporizer, an electric heater, a manifold with branches to the primary containment; and pressure, flow, and temperature controls. The nitrogen storage tanks have a nominal capacity of 3000 gallons each which is adequate for the first seven days of CAD system operation. The nitrogen vaporizers use ambient atmosphere as the heat source. Electric heaters are provided for use during cold weather to warm the gas.

Following a LOCA, records are kept of hydrogen and oxygen concentrations and pressures in the drywell and suppression chamber. The CAD system is then operated manually to keep the oxygen concentration <5% or the hydrogen concentration <4% in each volume. Additions are made separately to the drywell and suppression chamber. Manual initiation of the CAD system is calculated to be required about 10 days following postulated design basis LOCA.

When the CAD system is adding nitrogen to the drywell and/or suppression chamber, pressure will increase. Before drywell pressure reaches 30 psig, drywell venting via the standby gas treatment system will be started. Gas releases will be performed periodically and independently from the drywell and suppression chamber.

Releases will be made during periods of the most favorable meteorological conditions at a rate of approximately 100 scfm until the desired volume has been released. Releases will continue over time until primary containment pressure has been reduced to atmospheric. Additions and releases will be conducted at different times.

6.5.2.2 Containment Response to a LOCA

When the postulated line break occurs, the drywell is immediately pressurized. As drywell pressure increases, drywell atmosphere (primarily nitrogen gas) and steam are blown down through the radial vents to the vent header and into the suppression pool via the downcomers. The steam condenses in the suppression pool which suppresses the peak pressure realized in the drywell. Drywell pressure peaks at 49.6 psig at about 10 seconds following the line break. Noncondensible gases discharged into the suppression pool end up in the free air volume of the suppression chamber which accounts for the suppression chamber pressure increase. As LOCA steam is condensed in the suppression pool, drywell pressure decreases and stabilizes 27 psig while suppression pool temperature reaches 135^{0}F. Drywell pressure decreases to the point that suppression chamber pressure exceeds it by 0.5 psid. This causes the suppression chamber-drywell vacuum breakers to open and vent noncondensible gases back into the drywell

to equalize the drywell and suppression chamber pressures.

Low pressure emergency core cooling systems (ECCS) begin pumping water into the reactor vessel, removing decay and stored heat from the core. Water injected into the reactor vessel then transports core heat out of the reactor vessel via the broken recirculation loop. The hot water collects on the drywell floor and then flows into the suppression chamber via the vent pipes, vent header, and downcomer pipes. Thus a closed loop is formed with low pressure ECCS pumps (core spray system and RHR system LPCI mode) pumping water from the suppression pool to the reactor vessel. The water then returns to the suppression pool and the process is repeated.

At about 600 seconds it is assumed that the RHR system would be switched from the LPCI mode to suppression pool cooling. In this mode suppression pool heat is removed via the RHR heat exchangers causing primary containment temperature and pressure to decrease. If necessary, the containment spray mode of the RHR system can be initiated to spray cooled suppression pool water into the drywell and/or suppression chamber atmospheres to control primary containment pressure.

6.5.3 Mark II Containment

The Mark II primary containment (figures 6.5-3 and 6.5.4) consists of a steel dome head and either a post-tensioned concrete wall or reinforced concrete wall standing on a base mat of reinforced concrete. The inner surface of the containment is lined with steel plate which acts as a leak tight membrane. The containment wall also serves as a support for the floor slabs of the reactor building and for the refueling pools. The floor slabs are resting on corbels that are formed as part of the containment wall. The refueling pools are integrally connected to, and supported by the concrete containment wall.

The suppression system is the over-and-under configuration. The drywell, in the form of a truncated cone, is located directly above the suppression pool. The suppression chamber is cylindrical and separated from the drywell by a reinforced concrete slab. The drywell is topped by an elliptical steel dome called the drywell head. The drywell inerted atmosphere is vented into the suppression chamber through a series of downcomer pipes penetrating and supported by the drywell floor.

In order to prevent flooding of the drywell during refueling, a bellows type seal is used to seal the space between the reactor vessel and the drywell. The bellows permits free relative movement and offers some restraint to relative lateral displacement of the RPV and the primary containment vessel.

6.5.4 Mark III Containment

BWR/6 product lines use the Mark III containment concept. The Mark III containment is a multibarrier, pressure suppression style containment. The containment structure is similar to a standard dry containment and can be designed as either a free standing steel containment surrounded by a concrete shield building or as a concrete pressure vessel with a liner. The former design is referred to as the reference design while the latter is the alternate. Discussion in this section is limited to the reference design.

The primary containment consists of several major components, many of which can be seen in figure 6.5-5. The drywell is a cylindrical, reinforced concrete structure with a removable steel head and encloses the reactor vessel. It is designed to withstand and confine the steam generated during a pipe rupture inside containment and channel this steam into the suppression pool via the weir wall and horizontal vents. The suppression pool contains a large volume of water to act as a heat sink and water source for ECCSs. A leak tight cylindrical steel containment vessel surrounds the drywell and the suppression pool to

prevent gaseous and particulate fission products from escaping to the environment.

6.5.4.1 Component Description

The major components of the primary containment system are discussed in the paragraphs that follow.

Drywell

The drywell is a cylindrical reinforced concrete structure with a removable vessel head to allow vertical access to the reactor vessel for refueling or maintenance. The drywell is designed for an internal pressure of 30 psig, an external pressure of 21 psig, and an internal temperature of 330 ^{0}F. However, a high degree of leak tightness is not a requirement since the drywell *is not* a fission product barrier.

Large diameter horizontal vent openings penetrate the lower section of the drywell cylindrical wall to channel steam from a LOCA into the suppression pool.

The main function of the drywell is to contain the steam released from a LOCA and direct it into the suppression pool. Other functions of the drywell include:

- provide shielding to reduce containment radiation levels to allow normal access.
- provide structural support for the upper pool.
- provide support structure for work platforms, monorails, and pipe supports.

Horizontal Vents and Weir Wall

The weir wall forms the inner boundary of the suppression pool, and is located inside the drywell. It is constructed of reinforced concrete approximately two feet thick and lined with a steel plate on the suppression pool side.

Since the weir wall forms the inside wall of the suppression pool, it contains the pool and allows channeling the steam released by a LOCA into the suppression pool for condensation. The weir wall height is 25 feet and allows a minimum freeboard of 5 feet 8 inches. This freeboard is sufficient height to prevent the suppression pool from overflowing into the drywell.

The Mark III arrangement uses horizontal vents to conduct the steam from the drywell to the suppression pool following a LOCA. Figure 6.5-6 shows an enlarged horizontal and vertical section of vents. In the vertical section, the drywell wall is penetrated by a series of 27.5 inch diameter horizontal vent pipes. There are 3 rows of these horizontal pipes at levels of 7.5, 12 and 16.5 feet below the surface of the suppression pool. The total pool depth is approximately 20 feet. The horizontal section is a partial view of the 40 column of vents, vent annulus, and weir wall.

Any buildup of drywell pressure forces the water down in the annulus. The higher the pressure in the drywell the greater the depression and the number of vents that will be uncovered.

Containment

The containment is a free standing cylindrical steel pressure vessel that surrounds the drywell and suppression pool to form the primary leak tight barrier to limit fission product leakage during a LOCA. By design the containment will not leak more than 0.1% of the containment volume in 24 hours at a pressure of 15 psig.

Among the postulated LOCAs, some accidents may require flooding the containment to remove fuel from the reactor and effect repairs. Although it is anticipated that for most accidents, defueling of the reactor will be accomplished by normal procedures and equipment, as a contingency to cover undefined damage resulting from a LOCA,

the containment can be flooded to a level 6 feet 10 inches above the top of the active fuel in the core.

Upper Pool

The containment upper pool walls are above the drywell and within the containment column. The pool is completely lined with stainless steel plates and consists of five regions:

- moisture separator storage
- reactor well
- steam dryer storage
- temporary fuel storage
- fuel transfer region

The upper pool provides radiation shielding when the reactor is operating, storage for refueling operation, and a source of water makeup for the suppression pool following a LOCA.

Combustible Gas Control

To ensure containment integrity is not endangered because of the generation of combustible gases following a postulated LOCA, the containment is protected by a collection of systems called the containment combustible gas control system (CCGC system).

The CCGC system, figure 6.5-7, prevents hydrogen concentration in the primary containment from exceeding the flammability limit of 4% (by volume). The system is capable of mixing the atmosphere inside the drywell with that inside containment following a LOCA. When the drywell hydrogen concentration begins to increase, the drywell mixing compressors are started manually by the control room operator. Air from the containment is pumped into the drywell increasing drywell pressure. The increase in drywell pressure depresses the annulus water uncovering vents and allowing the drywell atmosphere to mix with the containment.

While drywell mixing continues following a LOCA, hydrogen continues to be produced. Eventually, the 4% limit is approached in the containment, requiring the hydrogen recombiners and hydrogen ignition system to be manually placed in operation. The recombiners are located in the containment upper region. Air flow through the recombiner is designed to process 100 cfm of containment air, heating it to 1150^{0}F. The heated air leaving the heater section is mixed with containment atmosphere to limit the outlet temperature to approximately 50^{0}F above ambient.

The hydrogen ignition system consists of hydrogen ignitors distributed throughout the drywell and containment. The ignitors burn the hydrogen as its evolved to maintain the concentration below detonable limits.

A small line, connecting the drywell with the shield building annulus, is used during reactor startup and heatup. Drywell pressure is vented to the annulus through the bleedoff and backup purge line. This venting can support plant heatup at the design rate of 100 ^{o}F/hr. If hydrogen recombiners are not available subsequent to a LOCA, the drywell bleedoff valves may be opened for backup purging. This flowpath allows about 100 cfm of air from the drywell to enter the shield building annulus where it is removed and then later processed by the standby gas treatment system.

6.5.5 Summary

The primary containment package provided for a particular product line is dependent on the vintage of the plant and the cost-benefit analysis at the time. During the evolution of the boiling water reactor, three major types of containments were built. The major containment designs are the

Mark I, Mark II, and Mark III. Unlike the Mark III, that consists of a primary containment and a drywell, the Mark I and Mark II designs consist of a drywell and wetwell (suppression chamber). All three primary containment designs use the principle of pressure suppression for loss of coolant accidents. For comparison of containments see table 6.5-1.

Table 6.5-1 Containment Comparison Chart

	Mark I (BFNP)	Mark II (LaSalle)	Mark III (Perry)
Drywell Material	Steel	Concrete	Concrete
Drywell Thickness (ft)	.17	6	6
Drywell Upper Diameter (ft)	39	31	73
Drywell Lower Diameter (ft)	67	73	73
Drywell Height (ft)	115	91	89
Drywell Free Air Volume (ft^3)	159,000	209,300	277,685
Drywell Design Internal Pressure (psig)	56	45	30
Drywell Design External Pressure (psig)	2	5	21
Drywell Deck Design d/p (psid)	N/A	25	N/A
Drywell Design Temperature (°F)	281	340	330
Drywell max. Calculated LOCA Pressure (psig)	49.6	34	22.1
Shield above RPV Head	Concrete	Concrete	Water
Suppression Chamber (or Containment) Thickness (ft)	.17	4	.15
Suppression Chamber (or Containment) Steel Liner Thickness	N/A	.25	N/A
Suppression Chamber (or Containment) Diameter ft)	111	87	120
Suppression Chamber (or Containment) Height (ft)	31	67	183
Suppression Chamber (or Containment) Free Air Volume (ft^3)	119,000	164,500	1,141,014
Suppression Pool Volume in Drywell (ft^3)	N/A	N/A	11,215
Total Suppression Pool Volume (ft^3)	135,000	124,000	129,550
Upper Pool Makeup to Suppression Pool (ft^3)	N/A	N/A	32,830
Suppression Chamber (or Containment) Design Internal Pressure (psig)	56	45	15
Suppression Chamber (or Containment) Design External Pressure (psig)	2	5	0.8
Suppression Chamber (or Containment) Design Temperature (°F)	281	275	185
Suppression Chamber (or Containment) max. Calculated LOCA	27	28	11.31
Suppression Chamber (or Containment) design Leak Rate (% of vol/Day)	.5	.5	.2
Number of Drywell to Suppression Chamber (or Containment) vents	8	98	120
Total Vent Area (ft^3)	286	308	512
Drywell Atmosphere	N_2	N_2	Air

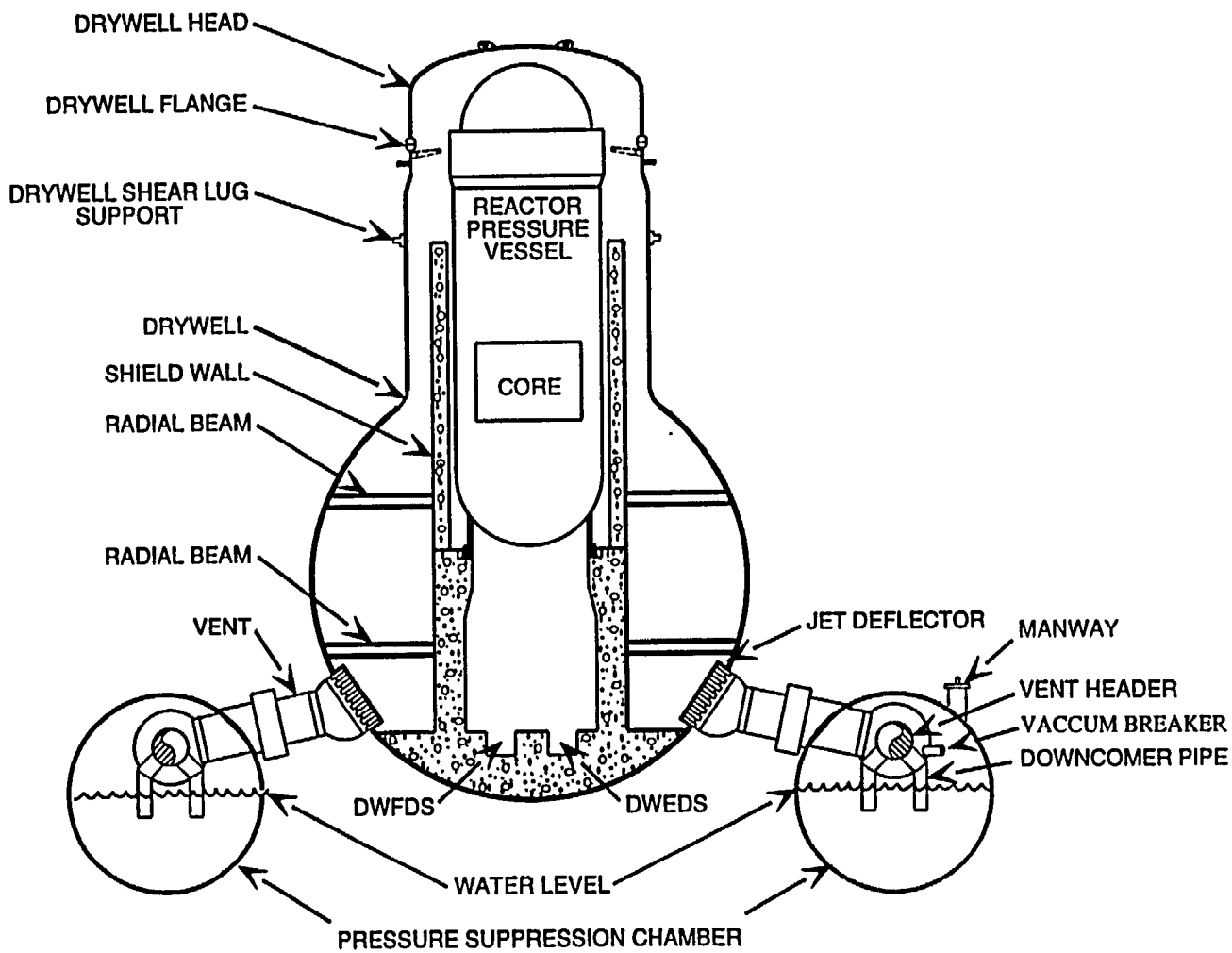

Figure 6.5-1 Mark Containment

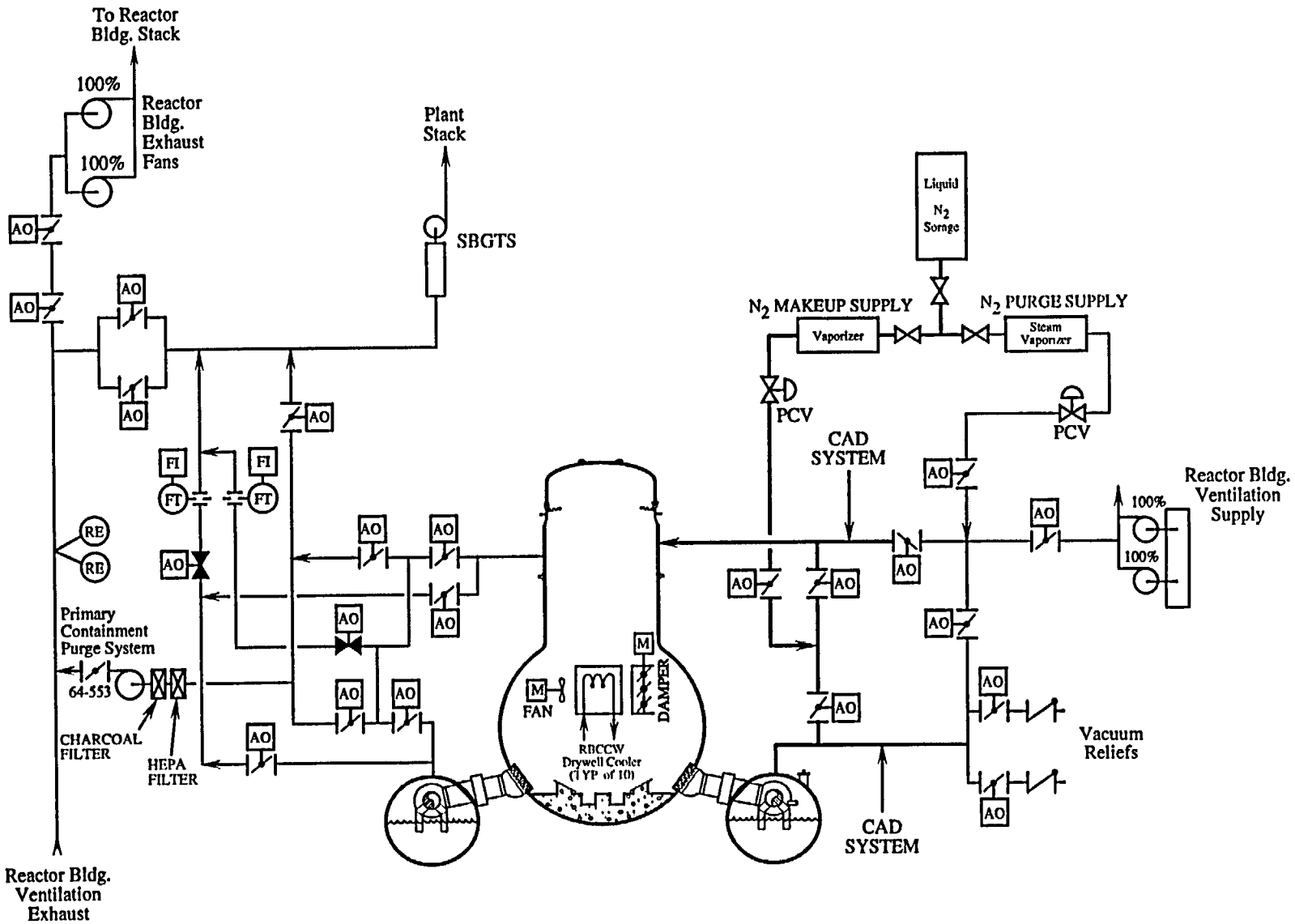

Figure 6.5-2 Mark I Containment Combustible Gas Control

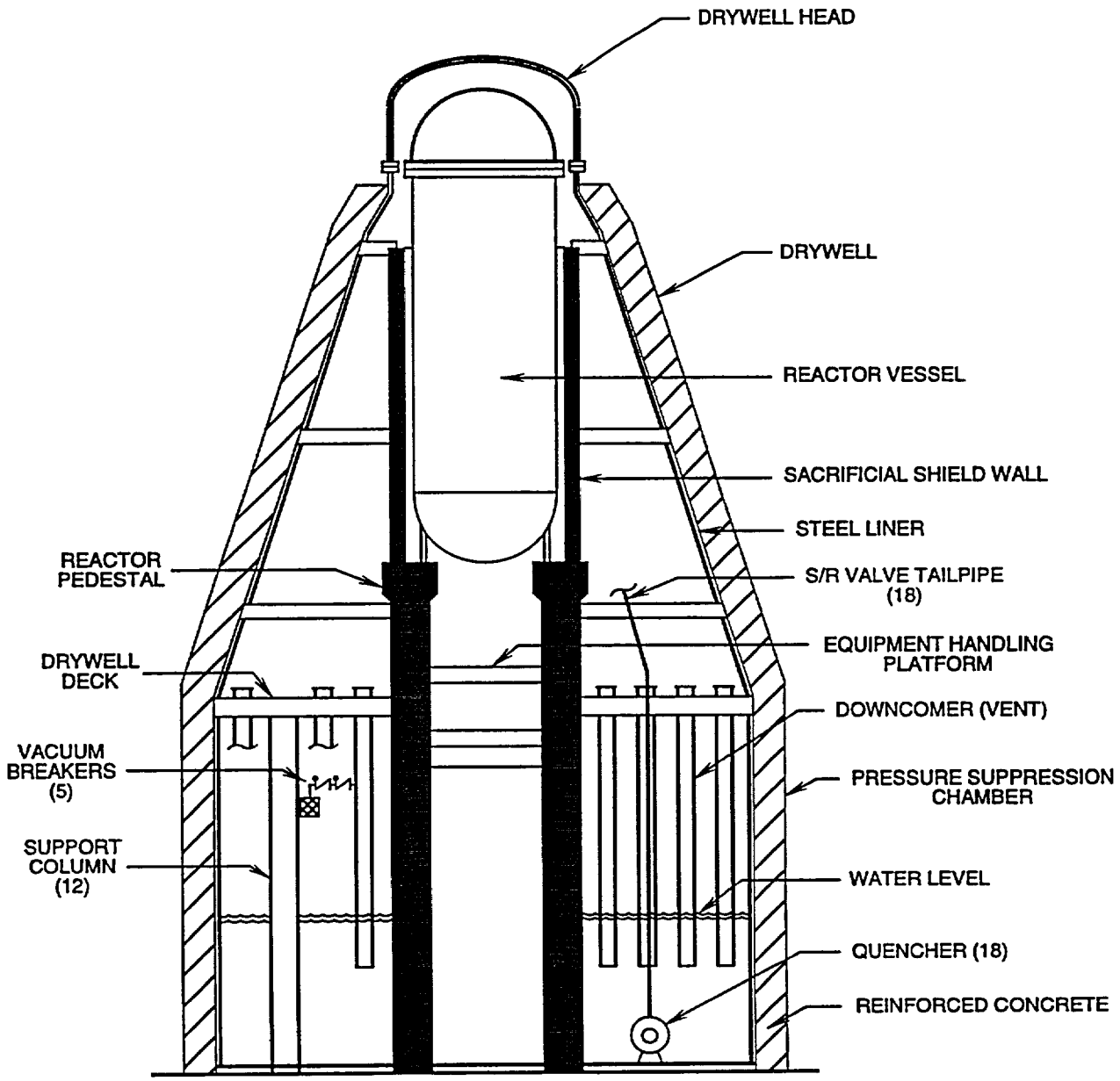

Figure 6.5-3 Mark II Containment

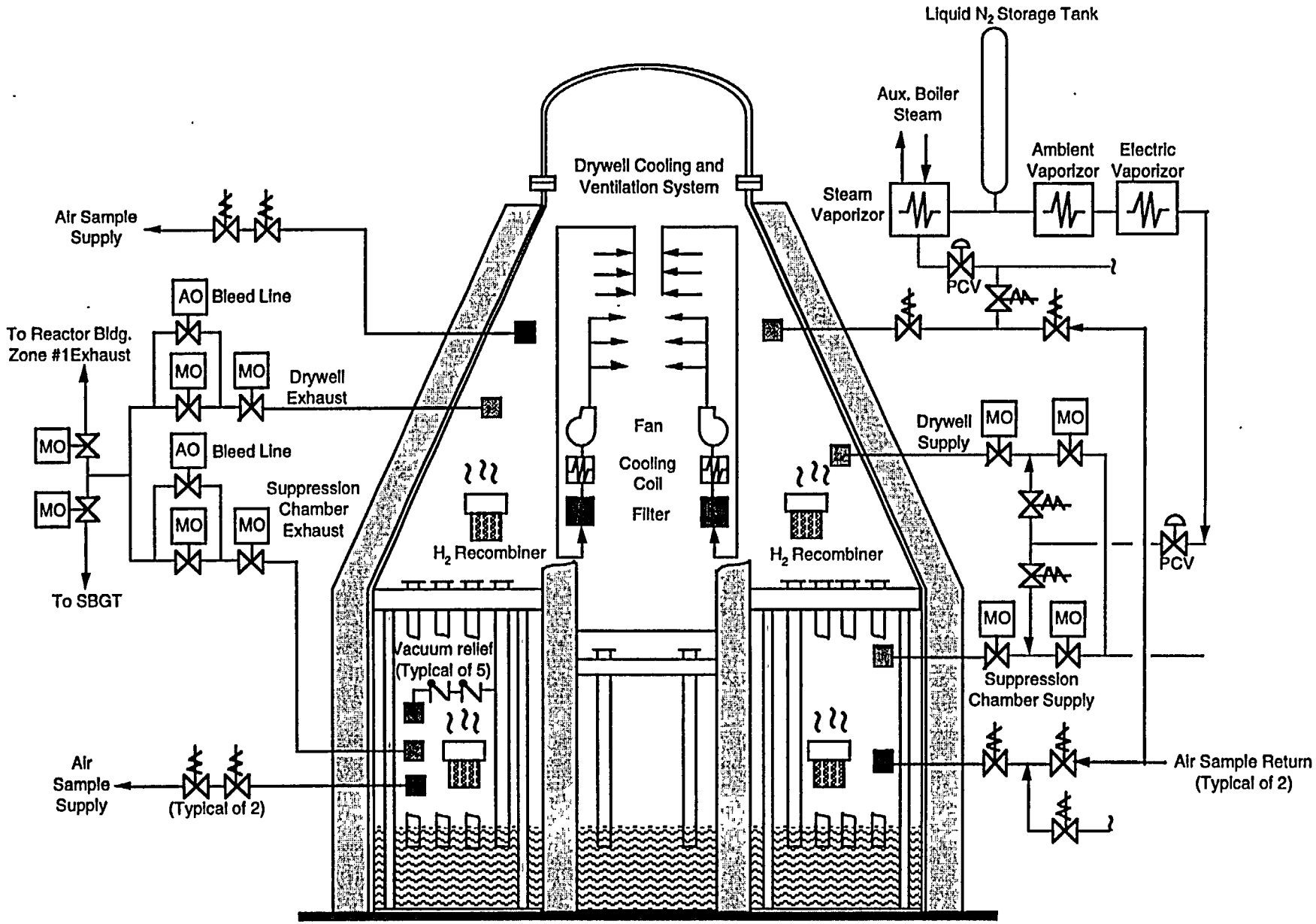

Figure 6.5-4 MARK II Containment Combustible Gas Control

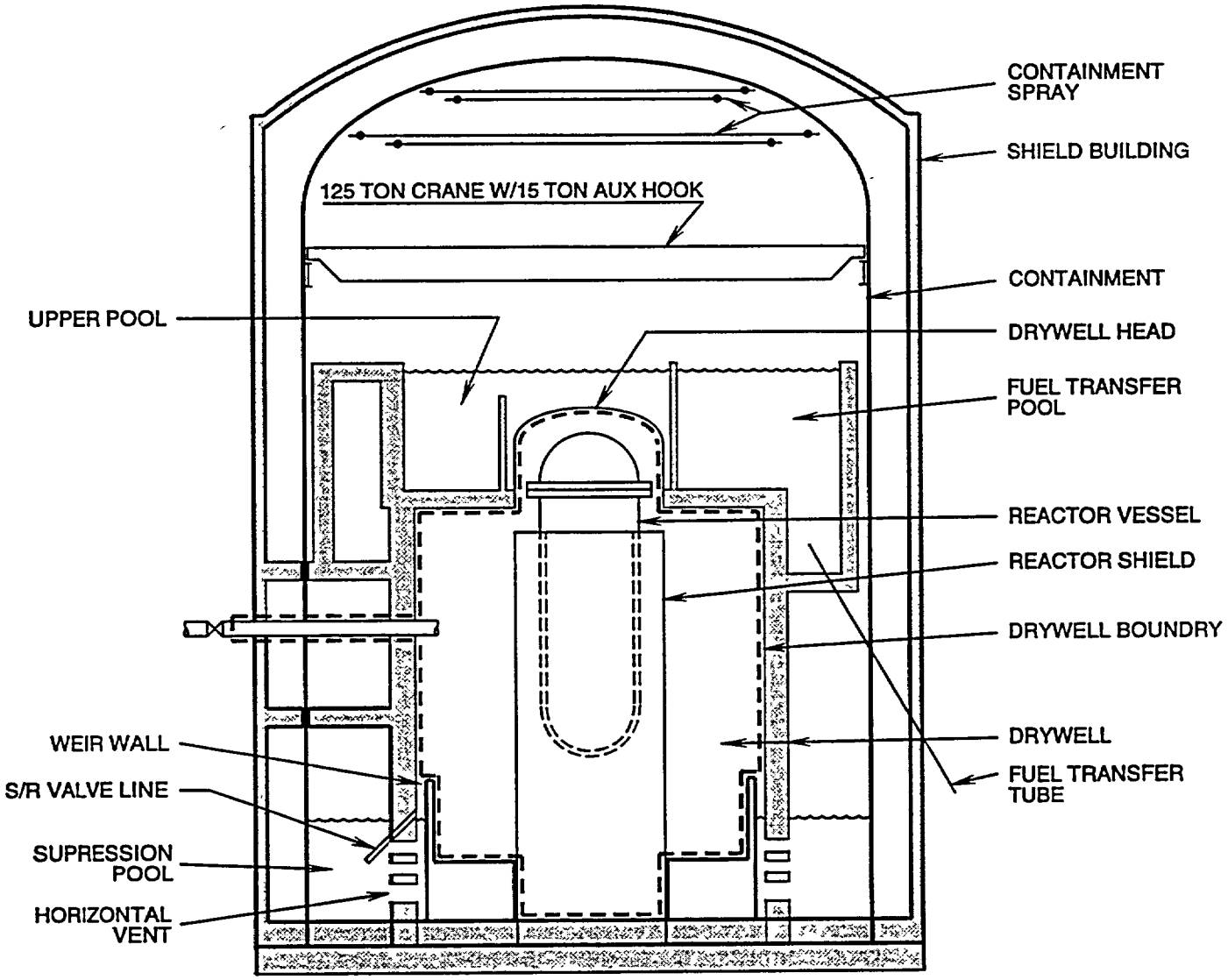

Figure 6.5-5 Mark III Containment

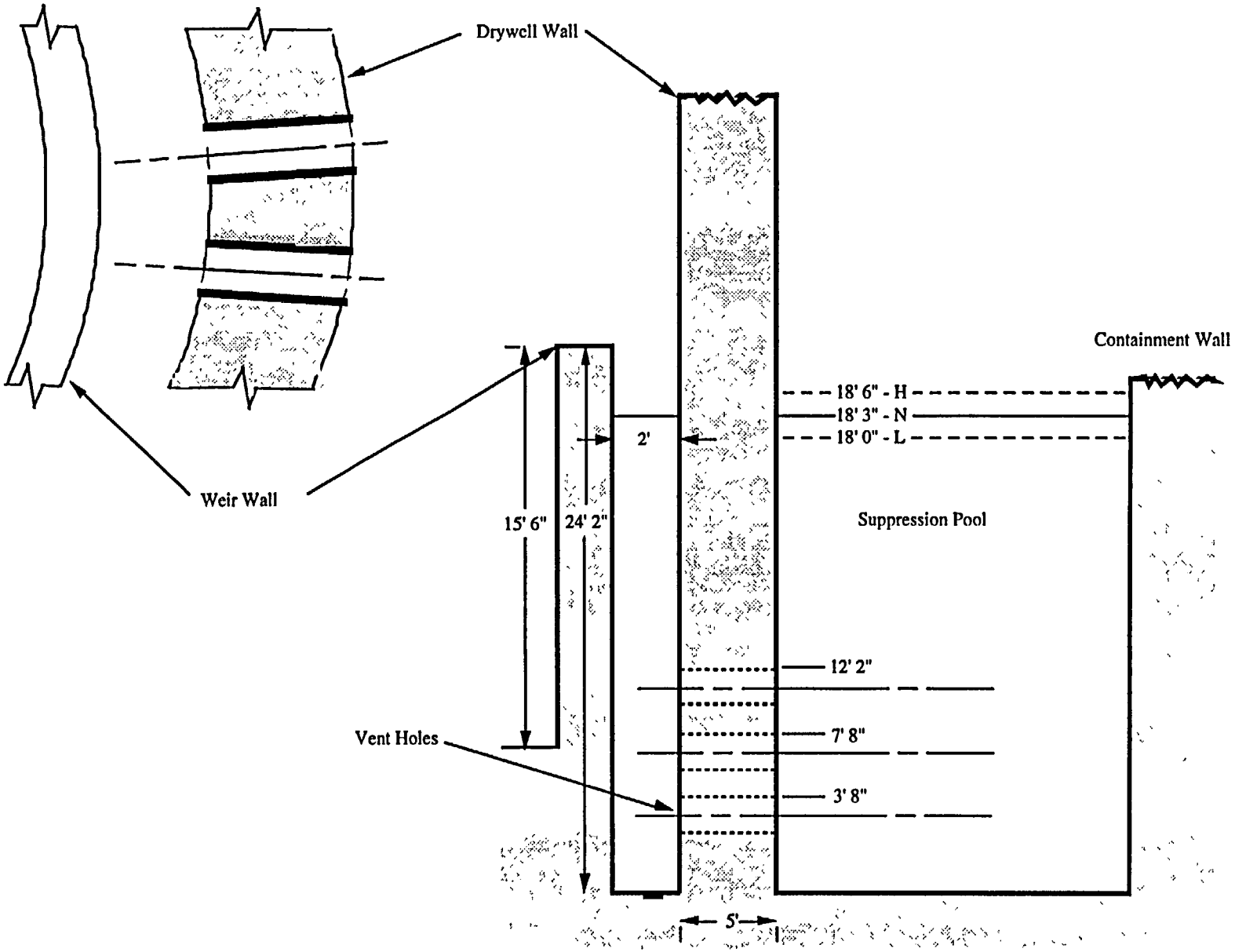

Figure 6.5-6 Mark III Containment Vent Arrangement

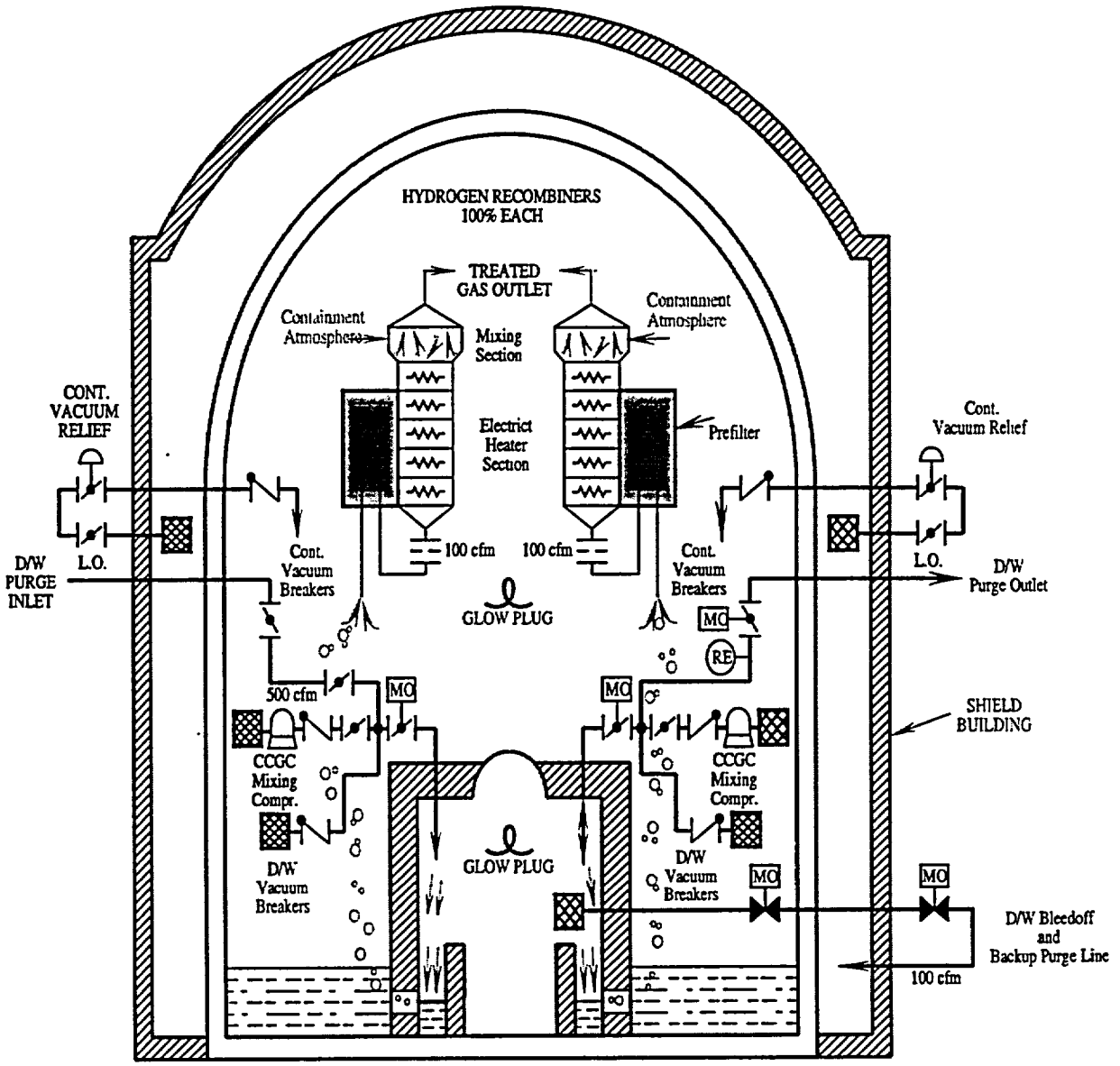

Figure 6.5-7 Mark III Containment Combustible Gas Control