DOCKET NUMBER
PROPOSED RULE PR-71,73 (FR 23768)
Trans. Radioactive Mtl. by Air

STATE OF NEW YORK
DEPARTMENT OF LAW
TWO WORLD TRADE CENTER
NEW YORK, N.Y. 10047
TELEPHONE: 212-488-7562

LOUIS J. LEFKOWITZ
ATTORNEY GENERAL

PHILIP WEINBERG
ASSISTANT ATTORNEY GENERAL
IN CHARGE OF
ENVIRONMENTAL PROTECTION
BUREAU

May 17, 1976

Director
Office of Standards Development
United States Nuclear Regulatory
Commission
Washington, D.C. 20555

Re: Comments on the Nuclear Regulatory Commission's Draft Environmental Impact Statement on the Transportation of Radioactive Materials (NUREG-0034)

Dear Sir:

Pursuant to Notice of Availability of the above-referenced Draft Environmental Impact Statement ("DES") published at 41 Fed. Reg. 12937 and the solicitation of comments on that DES as contained in the Notice of Availability, the New York State Attorney General submits herewith comments on certain portions of the Draft Environmental Impact ("DES") from this office. Comments on other portions of the DES are in final preparation and will be submitted shortly hereafter. These additional comments will, in part, relate to the analysis in the DES of toxicity of materials, containerization, and overall risk analysis.

The DES if adopted as a Final Environmental Impact Statement ("FES") without major revision by the NRC will constitute a legally inadequate EIS under the National Environmental Policy Act, ("NEPA") 42 U.S.C. § 4321 et seq. The DES does not address many of those issues set forth in materials previously submitted by this office to the NRC in the course of this administrative proceeding as originally

noticed in the Federal Register. 40 Fed. Reg. 23768. Moreover, the DES does not address those issues discussed in the affidavits of Theodore T. Mason and Robert R. Leamer dated November 30, 1975 and January 20, 1976 previously submitted to the United States District Court for the Southern District of New York in the case of the State of New York v. The Nuclear Regulatory Commission (75 Civ 2121 [WCC]), copies of which are enclosed. These affidavits should be treated as sealed documents. Similarly the NRC should address those problems cited by John F. Shea, III, in the affidavits submitted in that court action, dated December 11, 1975 and January 20, 1976 and Captain James A. Eckols, dated November 28, 1975. Copies of all of these affidavits are enclosed.

In addition to the comments previously and now submitted to the NRC on this transportation issue and apart from those soon to be filed by this office with the NRC, several other more general comments are pertinent to a discussion of the DES and ultimate impact statement adequacy:

1) The DES fails to discuss in any way shipments of special nuclear materials ("SNM") and other radioactive substances by the Energy Research and Development Administration ("ERDA"). These shipments should be described in detail as to substance, quantity, and number. Of course a risk analysis of these shipments should be made.

2) More detailed discussion of the substance, quantities and numbers of shipments by NRC licensees should be included in the DES.

3) One of the most glaring inadequacies of the DES is the failure to give a meaningful assessment of the hazards of shipments by the water mode. Two pages of cursory discussion in the DES is given to this major alternative (pp. IV-34-35).

4) The DES safeguards discussion bases portions of its analysis on the as yet incomplete and unreleased analysis of safeguards in the Generic Environmental Statement on the Use of Recycle Plutonium in Mixed Oxide Fuel in LWR's. WASH 1327 ("GESMO"). General references to uncompleted studies in other proceedings render the DES legally inadequate.

The NRC must recognize, of course, that the execution of a generic review of this transportation issue and the drafting of a generic environmental impact statement will not satisfy the NRC's full obligation under NEPA. In this regard see the points raised in the affidavit of John F. Shea, III, dated January 20, 1976, as to the scope of the NEPA review process necessitated by this transportation issue.

Very truly yours,

LOUIS J. LEFKOWITZ
Attorney General
By

John F. Shea III
by JJZ

JOHN F. SHEA, III
Assistant Attorney General

JFS:rab
Enc.

JUN 16 1976

Mr. Louis J. Lefkowitz, Attorney General
State of New York Department of Law
Two World Trade Center
New York, New York 10047

Dear Mr. Lefkowitz:

Thank you for your letter dated May 17, 1976 commenting on the Nuclear Regulatory Commission's Draft Environmental Statement on the Transportation of Radioactive Materials (NUREG-0034)

Your letter requested that two of its enclosures be treated as "sealed documents". We have considered this to be a request for withholding those two enclosures from public disclosure, a request subject to the provisions of Part 2, "Rules of Practice", and Part 9, "Public Records", of Title 10, Code of Federal Regulations, copies of which are enclosed. Since your request contained no reasons recognized in those regulations for nondisclosure of the two documents, your request is denied without prejudice to your future resubmittal. The two enclosures to your letter dated May 17, 1976, identified as affidavits of Theodore T. Mason and Robert R. Leamer dated November 30, 1975 and January 20, 1976 are hereby returned to you, and will not be considered as comments on the Commission's Draft Environmental Statement NUREG-0034

Sincerely,

ORIGINAL SIGNED BY [illegible]

Robert B. Minogue, Director
Office of Standards Development

Enclosures (original only):
1. 10 CFR Part 2, "Rules of Practice"
2. 10 CFR Part 9, "Public Records"
3. Affidavit dated November 30, 1975
4. Affidavit dated January 20, 1976

TP513.1

bcc: Public Document Room (FR 71, 73 40 FR 23768)

COMMENTS OF THE NEW YORK STATE ATTORNEY GENERAL ON THE DISCUSSION OF SAFEGUARDS IN THE NUCLEAR REGULATORY COMMISSION'S DRAFT ENVIRONMENTAL IMPACT STATEMENT ON THE TRANSPORTATION OF RADIOACTIVE MATERIAL BY AIR AND OTHER MODES
NUREG 0034

By

THEODORE T. MASON

ROBERT R. LEAMER

Introduction

1. Three affidavits were submitted by Robert R. Leamer and Theodore T. Mason, dated 16 June, 1975, 30 November, 1975 and 20 January, 1976 to the United States District Court for the Southern District of New York in the case of the State of New York v. The Nuclear Regulatory Commission, et al. Copies of these affidavits have been provided to the Nuclear Regulatory Commission ("NRC") in the course of this proceeding dealing with the transportation of radioactive materials as originally noticed in the Federal Register. 40 Fed. Reg. 23768. References to the "plaintiff" in these comments on the Draft Environmental Impact Statement ("DES") are, of course, to the State of New York. Occasionally references are made to the "defendants" and "defendants' affidavits"; these references are to the NRC and its sister agencies which are involved with the transportation of radioactive materials and the affidavits which this agency and its sister agenices have filed in the litigation initiated by the State of New York.

The prior Mason/Leamer affidavits were submitted to:

a. demonstrate that there is a substantial likelihood a highly motivated group of terrorists could be successful in destroying or seizing for destructive use special nuclear materials (SNM) in the course of commercial air transport, or related connecting transport, notwithstanding existing safeguard regulations and/or actual practice;

b. indicate that the military has the current safeguard capability to move SNM by surface transport which is significantly less vulnerable to terrorists than commercial air transport and related connecting transport;

c. specifically evaluate the air transport of uranium (as opposed to plutonium) and demonstrate that any one of five (5) military assisted transportation system alternatives is significantly more secure against terrorist action than commercial air transport, because of:

(1) rigorous control of future shipment movement information;
(2) more secure in-transit communications;
(3) reliable and highly motivated personnel with security training and clearances;
(4) appropriate selection of weapons and vehicles;
(5) superior reaction capability;
(6) physical remoteness of airfields and facilities;
(7) psychological deterrent of a U.S. military protection force.

d. indicate that points contained in J. Edlow's affidavit submitted by defendants and in the MITRE Report prepared for the Nuclear Regulatory Commission (MITRE Technical Report 7022, September, 1975, The Threat to Nuclear Facilities), corroborate the findings of Mr. Leamer and myself regarding the vulnerability of commercial air and related connecting transport sys-

tems, including the following points:

(1) "Expediting" as practiced under current Part 73 Regulations and described by Mr. Edlow may provide notice after a shipment of SNM has been misrouted or diverted and may help prevent casual theft. However, it will not prevent determined terrorist attacks or organized theft. Shipment preplanning integral to "expediting," without stringent information control, could substantially aid a terrorist in seizing or destroying SNM in transit.

(2) There have been no less than 26 commercial aviation-related terrorist acts in the last 6 years; carriage of SNM in commercial aircraft provides terrorists with an additional incentive; the MITRE Report observed that terrorism has become commonplace in the Western World and weapons of large caliber and full-automatic fire can be easily procured;

(3) The transportation industry is heavily infiltrated with criminals, corruption, employee collusion, and has been characterized by Sam Edlow as untrustworthy, incompetent, and operating in an environment of criminality; the MITRE Report has observed that a veritable army of criminals and hoodlums in this country is waiting and willing to undertake any activity, including murder, if profit justifies it.

Purpose of this Affidavit

2. The purpose of this affidavit is to evaluate, as well as possible within the brief time available, the Draft Environmental Statement on the Transportation of Radioactive Material by Air and Other Modes, March, 1976 ("DES"), as a response to the previous affidavits of Mr. Leamer and myself.

Military Assisted Transportation Alternatives For Uranium

3. The only discussion of military assisted air transport alternatives in the DES is limited to approximately one-half of a page (p. VII-12). What little discussion there is emphasizes only the military airfield aspect of these alternatives. It is apparent that the 5 military assisted options for uranium transport detailed in our affidavit of 30 November, 1975 (pp. 4-7) were not considered.

4. The DES does admit that the use of military airfields and/or aircraft "appears technically feasible." However, in a footnote, the DES suggests that the use of military airfields and aircraft may be prohibited and cites a law said to provide that: "Except as otherwise provided by law, sums appropriated for the various branches of expenditure in the public service shall be applied solely to the objects for which they are respectively made." 31 U.S.C. 628. In light of the obvious danger to the national security inherent in commercial air transport and related connecting transport of SNM, the failure of the DES to demonstrate that there are no sums appropriated which might properly be applied to the use of military airfields and aircraft for transport of uranium is significant.

5. The statement that "adequate protection can be afforded at civilian airfields" (VII-12) is not supported by substantive discussion and misses the point that a military airfield has numerous advantages including inherent security, control of movement information, cleared, motivated and trained personnel, reaction capability, and location outside of highly populated areas.

6. Even though the DES makes no specific mention of military helicopters, it does make brief reference to helicopters generally (VII-13). This reference to helicopters, and STOL aircraft, together with their range and payload parameters, is without any quantification and hence without substance. After all this time, only conclusory speculation is offered. It is generally

known, however, that a wide range of helicopters is used in the military and in industry with considerable flexibility in range and payload. In fact, a quick check reveals, for example, the following:

Helicopter Manufacturer/Type	Range	Payload (lbs.)
Boeing Vertol model 234	240 nm. 320 nm.	20,000 4,000
Bell model 222 (undergoing certification)	425 nm.	1350 (Estimated)

Military Assisted Transportation Alternatives for Plutonium

7. The DES makes no reference whatever to the military surface transport alternatives for shipment of plutonium set forth in our Affidavit of 16 June 1975, pages 20 through 22.

Terrorist Use of SNM

8. In our Affidavit of 16 June 1975, pages 14-16, we cite a number of authorities in support of the following propositions:

a. that the information necessary for the design of a nuclear device is publicly available; and

b. that a technically competent group of terrorists could fabricate an effective, even if crude, nuclear device notwithstanding the fact that it had no prior experience in fabricating such a device.

Notwithstanding some discussion regarding the benefits of prior experience in the fabrication of such a device, the DES admits that persons without such experience could produce a device with a low tonnage yield, apparently a yield of one kiloton or less, or even a device with a substantial yield (F 1-3). Moreover, the DES admits that "the potential consequences arising from any nuclear explosive are so serious as to warrant the utmost vigilance, however low the probabilities may be." (F-2). The DES places great emphasis on the supposed difficulty of "emplacement" of a nuclear device because law enforcement agencies would be watchful (p. F-4). However, this is not very comforting when one considers the almost

infinite opportunities for emplacement in a large city.

9. On page VII-7, 8 the DES admits that plutonium oxide can be used as a dispersant in weapon form or by dispersing plutonium in transit by bursting its container and that such use would have serious consequences. However, in Appendix F, page F-4, the consequences of using plutonium oxide are said to be uncertain and such use is said to be inconsistent with observed behavior of terrorists. Peter Skinner's Affidavit of 2 May, 1975 indicates that the consequences of use of plutonium oxide as a dispersant are not uncertain. While it may true that terrorists have not yet used poisonous agents, that does not mean that they will fail to use them in the future. Moreover, terrorists might find particular appeal in a radioactive poison, not only because of its greater psychological value (over more conventional poisons), but also because of its extremely long life, assured effectiveness and its particular macabre method of destroying human tissue.

DES Discussion of Current Policy, Regulation and Practice

10. The DES makes a significant admission regarding the NRC's overall policy on safeguards. The DES states (VII-2) that, while safeguards must be capable of preventing acts which could result in a "major civil disaster," safeguards need only provide a "high degree of protection" against acts that could result in "serious civil damage." No justification or analysis is presented to support such a policy and no definitions are provided for any of the salient concepts employed. One would think that, given the immense danger posed to the public by terrorist use of SNM, safeguards should be capable of preventing any such use.

11. Plaintiff pointed out in the Mason/Leamer Affidavit of 20 January, 1976 that the provisions of 10 CFR 73 apply only to licensees shipping certain amounts of SNM computed by formula, which include 5,000 grams or more of U235 enriched to 20 per cent or more, or 2,000 grams or more of plutonium. Failure to subject smaller quantities to such regulations subjects the public to significant dangers specified in the above-mentioned Mason/Leamer

Affidavit. The DES does not respond to this point.

12. Plaintiff has demonstrated in three affidavits that the current requirements and practice regarding safeguards are inadequate to cope with the terrorist threat. The DES does not address itself in any meaningful way to the inadequacies previously specified by plaintiff. Indeed, the DES admits (VII-3) that "present requirements are designed to protect against theft, diversion, or sabotage by one or two employees with access to the plant and material, by a small armed force attacking a plant or vehicle, or by both acting in combination." "[S]mall force" is not defined in the DES. But, as to nuclear facilities, the Atomic Energy Commission ruled that licensees were only responsible for providing adequate security to repel not more than one or two individuals acting in concert (Nuclear Fuel Services Inc. - NRC Docket #50-201, Atomic Safety Licensing Board Decision, November 29, 1974, p. 11). However, it is almost certain terrorists would employ 4, 5 or more persons. Moreover, the AEC ruled that licensees were not required to protect nuclear facilities against a well armed band of saboteurs whatever the size of the band; licensees need only concern themselves with "an amateur group" (Id. p. 15).

13. Given the purpose for which the safeguard requirements (10 CFR 73) were designed it is not surprising that the requirements and practice are grossly inadequate to cope with terrorism.

14. The DES fails to respond to plaintiff's previously specified criticisms of various aspects associated with the use private guards: inadequate training, lack of security clearances, low pay, and lack of military type motivation. When the DES discusses the number of guards employed it is misleading. At one point (VII-10), it states that in truck transport "the number of guards would be varied to suit the particular shipment and preceived [sic] threat;" the regulations do not require this. At another point (VII-4), the DES states that, when cargo aircraft are used, enroute transfers must be observed by more than one armed person; the regulations do not necessarily so require.

15. Plaintiff has previously pointed out that the weapons and vehicles employed by private guards are inadequate for coping with the terrorist threat. The DES offers no meaningful response.

16. Nevertheless, the DES (VII-6) makes the bold assertion: "Licensee guards are expected at all times to (1) interpose themselves between SNM and any adversary attempting entry and (2) intercept anyone exiting with such material. A sufficient degree of force should be applied to counter that degree of force directed at them, including the use of deadly force . . . Considering the number of personnel and the weapons selection likely on both sides in a confrontation with terrorists, it would be tantamount to suicide for licensee guards to act in the manner suggested by defendant.

17. Plaintiff has previously demonstrated the wide dissemination of information regarding future SNM shipments (Affidavit of Peter Skinner, 2 May 1975) and emphasized the danger which this presents. The DES makes no response. Plaintiff has also pointed out the inadequacy of current communication systems used in commercial SNM transport. Again, the DES fails to respond.

18. The DES (VII-10) asserts that local law enforcement agencies located along a truck route would supply a secondary response. This is all well and good but for the fact that the regulations do not require communication equipment or frequency of contact which assures that such persons would be alerted when required. In connection with truck transport from airports to facilities, the DES (VII-11) states that convoys will have the additional protection of the facility's security force to act as a response capability, but fails to deal with the practical aspects involving distance, transport, communications, and on site responsibilities. The DES statement (VII-11) that "airplane security personnel" would be present during airport SNM transfers in addition to the guards accompanying the truck is not supported by the regulations. The regulations do not provide for armed airplane security personnel.

19. With regard to deterring an attack the DES places great emphasis on psychology (VII-8); this is ironic in light of the reluctance of the DES to give any meaningful consideration to use of military capabilities.

20. The statement in the DES that hardware and techiques are currently available to allow an effective recovery effort is inexplicable in light of the admission that recovery cannot be relied upon as the strong link in the security system. (VII-9)

21. With regard to monitoring and inspection of safeguard systems, the statements in the DES (VII-5) appear to be wishful thinking. Not even the DES claims this monitoring and inspection of SNM transport actually occurs.

Conclusion

22. The fact that the DES fails to respond to the plaintiff's previous affidavits is not surprising when one notes that the DES admits that an "in depth analysis of safeguards" is currently being undertaken (VII-9) and that studies are being completed to determine "the cost and effectiveness of alternative systems" to safeguard SNM (VII-15). Thus, at this late date, NRC admits that it has not yet analyzed and studied the safeguards issue involved in the air and related connecting transport.

Dated: New York, New York
April 9,1976

UNITED STATES DISTRICT COURT
SOUTHERN DISTRICT OF NEW YORK

----------X

THE STATE OF NEW YORK,

Plaintiff,

-against-

THE NUCLEAR REGULATORY COMMISSION, et al.,

Defendants.

----------X

AFFIDAVIT IN FURTHER SUPPORT OF PLAINTIFF'S MOTIONS

STATE OF NEW YORK)
: SS.:
COUNTY OF NEW YORK)

JOHN F. SHEA, III, being duly sworn, deposes and says:

1. I am an Assistant Attorney General in the office of LOUIS J. LEFKOWITZ, Attorney General of the State of New York, and I make this affidavit in further support of plaintiff's motions for a preliminary injunction and summary judgment.

2. The January, 1976 affidavit of Robert F. Barker of the Nuclear Regulatory Commission ("NRC") states that the preparation of an Environmental Impact Statement on the Transportation of Radioactive Materials By Air ("EIS") "is intended to satisfy the procedural and substantive requirements of the National Environmental Policy Act of 1969." (p. 1) It is still not clear, however, whether this "study" will include an assessment of several items such as ERDA shipments by air of special nuclear materials ("SNM"). Compliance with NEPA is, of course, an impossibility if ERDA actions are not subjected to scrutiny under the Act.

3. The NRC may or may not issue further environmental

impact statements, in addition to the generic EIS, in an attempt to satisfy the NEPA mandate. Compliance with NEPA would be an impossibility if all that was conducted was a generic review of these federal actions. Many issues not amenable to generic treatment are involved in the air transport of SNM. For example, the site-specific problems of such transport through the individual metropolitan regions of New York, Los Angeles, Detroit or Minneapolis-St. Paul, do not lend themselves to treatment in a single generic EIS. Similarly, for example, the issuance of at least some licenses by NRC, and at least some ERDA shipments, will demand NEPA assessment in individual EIS's. It must be remembered that plaintiff maintains that individual federal actions of licensing, approving, allowing or executing, directly or indirectly, the air transport of special nuclear materials constitute separate major federal actions significantly affecting the environment and requiring environmental impact statements.

4. Finally, procedural compliance with NEPA will only be possible when environmental review procedures implemented, including EIS preparation, are truly adequate under the Act. This issue may not be prejudged.

5. The Jackson Amendment restricting certain air shipments of plutonium by ERDA was signed into law on December 31, 1975.

6. In defendant's memoranda of law in opposition to plaintiff's earlier motion for a preliminary injunction, air transport of SNM was seen as being vital to the U.S. role of being a "dependable supplier" of SNM abroad. "Our role as a principal supplier of nuclear materials permits the United States to further its foreign policy objective of curtailing the proliferation of nuclear weapons." (Def. Mem. of Law, June 6, 1975, p. 5).

It is significant that, on Monday, January 19, 1976, the first chairman of the former Atomic Energy Commission, David E. Lilienthal, said that the United States must immediately and unilaterally "Order a complete embargo to the export of all nuclear devices and all nuclear material" to avoid the "impending disaster" of the rapid international spread of nuclear bombs. (New York Times, January 20, 1976, p. 2, cols. 4-6, copy attached as Exhibit "A").

7. It is respectfully requested that the affidavit of Messrs. Mason and Leamer, dated 20 January, 1976, be sealed.

JOHN F. SHEA, III

Sworn to before me this
20th day of January, 1976

Assistant Attorney General
of the State of New York

NEW YORK TIMES, JANUARY 20, 1976, p.2, cols.4-6.

U.S. Export Ban on Nuclear Equipment Urged by Former Atomic Energy Chief

By DAVID BURNHAM
Special to The New York Times

WASHINGTON, Jan. 19—The first chairman of the Atomic Energy Commission said today that the "impending disaster" of the rapid international spread of nuclear bombs required that the United States immediately and unilaterally end the shipment of nuclear equipment to all foreign countries.

The call was made at a Senate hearing by David E. Lilienthal, chairman of the commission from 1947 to 1950.

Two fellow panelists at the hearing, Dr. Hans A. Bethe and Dr. Herbert F. York, said they would support a temporary embargo of nuclear shipments, now estimated to earn the United States more than $1 billion a year, if it was the first step in a major diplomatic effort to develop an effective international system to control the spread of nuclear weapons.

Dr. Bethe, a Nobel Prize winner, director of theoretical physics for the Manhattan Project in World War II and professor of physics at Cornell University, has been an outspoken advocate of nuclear power as a source of energy. Dr. York, director of the Lawrence Radiation Laboratory at Livermore, Calif., during the development of the H-bomb, is a professor of physics at the University of California, San Diego.

"If a great number of countries come to have an arsenal of nuclear weapons, then I'm glad I'm not a young man and I'm sorry for my grandchildren," Mr. Lilienthal, now the head of an international consulting firm, said at the Senate Government Operations Committee hearing.

Six countries are known to have developed atomic weapons—the United States, the Soviet Union, Britain, France, China and India. But within four years, 28 countries are expected to be operating nuclear power reactors and developing within their borders a growing familiarity with nuclear technology.

"The tragic fact is that the atomic arms race is today proceeding at a more furious and more insane pace than ever," Mr. Lilienthal said. "Proliferation of capabilities to produce nuclear weapons of mass destruction is reaching terrifying proportions."

"We have to decide now what we can do, now, within our own capabilities, to prevent a very bad situation from becoming a disastrous and inevitable one," he said.

"I therefore propose as a private citizen that this committee, with its great prestige, call upon the Congress and the President to order a complete embargo to the export of all nuclear devices and all nuclear material, that it be done now, and done unilaterally," Mr. Lilienthal continued.

"Further, unilaterally, the United States should without delay proceed by lawful means to revoke existing American licenses and put an end to the future or pending licensing to foreign firms and governments of American know-how and facilities paid for and created by American taxpayers' funds and American brains."

Asked about the proposed embargo, Dr. Bethe said: "When I first heard about it and read it, I didn't like it. But I now like it when Mr. Lilienthal said the embargo was temporary until we worked out real controls. But we have to make clear that the embargo is temporary until a treaty can be concluded between nuclear countries that really assures control over proliferation."

Dr. York, in response to the same question, said, "My views are similar to Dr. Bethe's. As the first part of a major initiative to try to do something, it seems good."

Mr. Lilienthal said that if the United States, the world's major nuclear supplier, unilaterally embargoed the export of nuclear equipment, the other countries that have gradually begun selling reactors and other nuclear equipment to less developed nations such as Brazil would also cease their exports.

The two other panelists also offered suggestions about steps the United States should take to curtail the spread of weapons. Dr. York recommended that it cut off all nuclear shipments to the scores of nations such as France and Japan that have not ratified the 1968 treaty on the nonproliferation of nuclear weapons.

Dr. Bethe recommended that Congress immediately pass a law forbidding the export of the so-called "breeder reactor." This reactor, now under development by the United States, is designed to create more plutonium than it burns. In addition to serving as reactor fuel, plutonium can be fashioned into atomic bombs.

Senator Abraham A. Ribicoff, the Connecticut Democrat who heads the committee, called for a detailed study of the present weapons controls. "If the system is inadequate—and there are several experts who insist it is—then we must acknowledge these inadequacies and organize our Government to deal with them effectively and fast," he said. "Otherwise our nation and the world are in peril."

EXHIBIT "A"
J-86-18

UNITED STATES DISTRICT COURT
SOUTHERN DISTRICT OF NEW YORK

----------X

THE STATE OF NEW YORK,

Plaintiff,

-against-

THE NUCLEAR REGULATORY COMMISSION, et al.,

Defendants

----------X

AFFIDAVIT IN SUPPORT OF MOTION FOR PRELIMINARY INJUNCTION AND SUMMARY JUDGMENT

75 Civ. 2121 (WCC)

STATE OF NEW YORK)
: SS.:
COUNTY OF NEW YORK)

JOHN T. SHEA, III, being duly sworn, deposes and says:

1. I am an Assistant Attorney General in the Environmental Protection Bureau of the New York State Department of Law and am assigned to this action. I make this affidavit in support of plaintiff's motion for a preliminary injunction and for summary judgment.

2. The State of New York is making the instant motion for a preliminary injunction notwithstanding the Court's previous denial of a motion for a preliminary injunction by an order dated September 9, 1975. In making the motion, we rely on all previous affidavits, letters and memoranda submitted to the Court in the action, as well as an additional affidavit by Theodore T. Mason and Robert R. Leamer, sworn to November 30, 1975, which we respectfully ask to be sealed, an affidavit by Captain James A. Eckols, sworn to November 28, 1975, and this affidavit. In this motion we seek to clearly set forth a distinction between the

preliminary injunctive relief [illegible] we seek with regard to plutonium and that which we seek with regard to uranium, other than uranium enriched in the isotope U-233. U-233 is not a subject of the preliminary injunction motion because at present we are unaware of any immediate plans to transport such material by air.

3. Plaintiff continues to seek the cessation of all air transport and related connecting transport of plutonium, because the danger of dispersion of this highly toxic material in an aircraft-accident poses a grave threat to human life quite apart from the threats of terrorism. As for the threat of terrorism regarding plutonium, the Mason/Leamer affidavit sworn to July 16, 1975, pointed out that military assisted surface transportation is significantly less vulnerable to terrorist acts than the present commercial air transport system.

4. With regard to uranium (other than uranium enriched in the isotope U-233), plaintiff seeks a lesser remedy, i.e., the cessation of all commercial air transport and related connecting transport. This lesser remedy is sought because such uranium materials do not present the same toxic threat as plutonium. Nevertheless, as indicated in the Mason/Leamer affidavit sworn to June 16, 1975, and the affidavit of Peter N. Skinner sworn to July 31, 1975, uranium, like plutonium, could be fashioned into a practical nuclear explosive by terrorists. As also indicated in that Mason/Leamer affidavit, the commercial air transport system is highly vulnerable to terrorist interception of uranium. Finally, as indicated in the Mason/Leamer affidavit sworn to November 30, 1975, submitted herewith, military assisted transportation alternatives are far less vulnerable to such terrorist interception. Plaintiff particularly urges that alternative (1) suggested by Messrs. Mason and Leamer for the transport of uranium, i.e., the

use of military airplanes flying between military airfields with short hauls by military helicopter, is appropriate (Mason/Leamer Affidavit, sworn to November 30, 1975, pp. 4-5).

5. In addition to clearly setting forth a distinction between the preliminary injunctive relief sought with regard to plutonium and that sought with regard to uranium, we submit in this motion additional facts, set forth in the Mason/Leamer and Eckols affidavits submitted herewith, which demonstrate the irreparable harm which may result from failure to grant the requested relief as to plutonium and uranium.

6. I should also point out that the Congressional bill which the Court described at page 10 of its opinion of September 9, 1975, as restricting air shipments of plutonium by the Energy Research and Development Administration ("ERDA") has not become law. On December 3, 1975, I spoke with John Bell, Legislative Aide to Congressman James H. Scheuer. Mr. Bell informed me that the ERDA legislation, to which the Jackson Amendment regarding ERDA's shipment of plutonium by air transport was added, had been held up in a Senate-House Conference Committee since early fall. The delay in that Committee, Mr. Bell noted, was not due to the Jackson Amendment, but rather due to other Senate amendments. On December 2, 1975, the Committee reached final agreement on all issues but the Report had not reached the House and Senate. The Report retains verbatim the language of the Jackson Amendment.

7. The State of New York is also making a motion for summary judgment which declares that defendants' actions in licensing, approving, allowing and executing, directly or indirectly, the transportation by air and related connecting transport of special nuclear materials without having prepared, circulated for comment and filed adequate Environmental Impact Statements concerning the transport of all special nuclear

materials to, from, in, or over the City and State of New York and the United States and its territories are in violation of the National Environmental Policy Act, 42 U.S.C. § 4321, et seq. ("NEPA"), and the Council on Environmental Quality Guidelines, 40 C.F.R. § 1500, et seq. ("CEQ Guidelines"). It is significant that, notwithstanding the defendants' statement in their memorandum of law of June 6, 1975, page 16, that they did not concede that an Environmental Impact Statement is required by NEPA, defendants failed to adduce one argument in the 47 page memorandum which is directed toward that issue. The memorandum as a whole, in effect, did concede that defendants violated the law and concentrated solely on whether the preliminary injunctive relief ought to be denied for other reasons. Only defendants Civil Aeronautics Board and U.S. Customs Service later moved to dismiss the complaint and in their supporting memorandum of law (undated) asserted that they had not violated NEPA. At page 5 of that memorandum, however, they conceded that no facts were at issue. As demonstrated in plaintiff's opposing memorandum of law of September 5, 1975, on the facts admitted by defendant and on the law, these two defendants have also violated NEPA and the CEQ Guidelines. The motion to dismiss has not yet been decided.

8. The State of New York further moves that the summary judgment direct that defendants make available a draft generic Environmental Impact Statement concerning the transport of all special nuclear materials to, from, in or over the City and State of New York and the United States and its territories on or before December 31, 1975, that defendants hold hearings thereon during March 1976 in various parts of the country, including New York City, and accept comments thereon through March 31, 1976, and that defendants file an adequate final generic Environmental Impact Statement concerning the transport of all special nuclear materials to, from, in or over the Ci

and State of New York and the United States and its territories on or before June 21, 1976. Such a direction by the Court is required in order to ensure that the law will be complied with by a date certain. The date selected for making available a draft statement and for filing a final statement should not be burdensome to the defendants, since the Court noted at footnote 4 of its memorandum of September 9, 1975, that it had been represented to the Court that the draft would be available by the end of this year and the final by the summer of next year. The inclusion of dates for making available the draft and for hearings and the submission of comments by interested parties thereon is designed to assure that the date for filing the final statement will not be used as an excuse to curtail the extensive study and comment which a draft statement on this important topic will require.

9. On November 7, 1975, plaintiff filed a notice of appeal from the Court's order of September 9, 1975. The record on appeal is presently scheduled to be filed in the Court of Appeals on or before December 16, 1975. If the relief requested in the instant notice of motion is granted, prosecution of the appeal from the earlier order may not be necessary. If the relief requested in the instant notice of motion is denied and plaintiff appeals from that denial, it may be desirable to prosecute the two appeals simultaneously. Accordingly, plaintiff respectfully requests that the Court extend the time for transmitting the record on appeal to the Court of Appeals to and including February 5, 1976, pursuant to Rule 11(d) of the Federal Rules of Appellate Procedure.

JOHN F. SHEA, III

Sworn to before me this
11th day of December, 1975

Assistant Attorney General
of the State of New York

J-86-23

UNITED STATES DISTRICT COURT
SOUTHERN DISTRICT OF NEW YORK

----------X

THE STATE OF NEW YORK, :

Plaintiff, :

-against- : AFFIDAVIT

THE NUCLEAR REGULATORY COMMISSION, et al., : 75 Civ. 2121 (WCC)

Defendants. :

----------X

STATE OF MISSOURI)
:SS.:
COUNTY OF ST. CHARLES)

CAPTAIN JAMES A. ECKOLS, being duly sworn, deposes and says:

1. I am a pilot with an American flag commercial air carrier and am Chairman of the Hazardous Materials Committee of the Air Line Pilots Association (ALPA) which represents the professional interests of 32,000 airline pilots on 34 airlines. ALPA is a member of the International Federation of Air Line Pilots Associations which represents pilots from 60 nations. I make this affidavit in support of the State of New York's motion for a preliminary injunction and motion for summary judgment.

2. I will, in the ensuing pages, set forth the reasons why airline pilots believe that there exists an imminent and severe danger of catastrophic harm from the continued shipment of special nuclear materials ("SNM") by commercial air transport. My discussion will center on two areas of inadequacy of this method of shipment: I. Safeguards, II. Containment, Control, and Handling.

I. Safeguards

3. Critical to the safety of commercial air transport of SNM is the severely inadequate security within the air cargo industry. Presently, regardless of cargo, multi-million dollar aircraft and pilots are subject to selection at any time as a "target of opportunity" by skyjackers, extortionists, terrorists or saboteurs. We received a clear lesson as to the very real terrorist threat as 3 Boeing 747's burned to ashes on a patch of Jordanian desert while crew and passengers were held hostage under the muzzles of terrorist sub-machine guns. We have seen as well:

- -mid air sabotage
- -grenade attacks on land
- -attacks on terminals
- -abductions
- -diversions
- -over 370 global acts of terror endangering 16,000 people.

As I have stated, the lesson is clear, SNM must be removed from commercial air transport.

4. As it stands now, without waivers from the FAA certain materials would be strictly forbidden from carriage aboard any aircraft other than those under the direct jurisdiction of the Department of Defense. Often information as to the presence of SNM is not properly disseminated to crew members actually flying the aircraft and, in some cases, their exposure to danger is shocking, moreover, the related danger to the cargo itself is appalling. The crew members involved in this transportation have not volunteered for this extremely hazardous duty for the benefit of industrial shippers.

5. If these materials must be moved by air transportation, they should be moved by military personnel, in military aircraft from military airports that do not constitute a hazard to the public.

6. Data found in studies prepared by the former Atomic Energy Commission ("AEC") support the contention of the State of New York that the hazards involved with the commerical air transport of SNM, due to such transport's vulnerability to theft, organized crime, terrorism and cargo loss, warrant immediate suspension of such transport of SNM. Sam Edlow, President of Edlow International Company, which company shares a virtual monopoly of the SNM shipping business with the Transnuclear Company, was contracted by the AEC to prepare A Factual Study of Special Nuclear Material Patterns of United States Commercial Organizations and Of Unclassified Exports By The AEC and Its Contractors. ("Edlow Rept."). The report, prepared by that major industry spokesman, contains several specific findings:

> -The commercial airline industry is stuck with the fact that enroute terminal use and attendant security risks cannot be avoided.
>
> -Commercial airlines do not find it feasible to disqualify high risk individuals.
>
> -Commercial airlines do not find it feasible to equip vehicles with simple alarms or more sophisticated anti-hijack devices. (In this connection, two well-known national companies providing armed car services were interviewed. Neither company saw "any purpose to be served by equipping armored cars with alarms or other anti-hijack equipment."
>
> -Similarly, commercial airlines do not find it feasible to provide special locks for vehicles.

-Nor do they find it feasible to provide constant communication.

-The airlines do not seal off "driver's" compartments on any vehicles. (Edlow Rept. pp. 24, 25, 42)

7. It has been stated by defendants in their affidavits that the reasons for shipment of SNM by air, "as with any material involves factors of economics, reliability, convenience and speed in delivery" (D. Aff. of Leland Rouse, p. 4). This glosses over real reasons for air shipment as determined by Mr. Edlow. According to him, cost is the most important consideration to shippers in the selection of shipping method. (Edlow Rept. p. 13)

8. The defendants further state that "containers are less likely to be delayed or misrouted when transported by air than by surface transport, particularly when long distances are involved" (D. Aff., Leland Rouse, p. 4). This statement is utterl without basis, and is contrary to the facts of which defendant DOT is fully aware. Sam Edlow authoritatively related the details of several incidents which show such statements by the defendants to be gross distortions of what really goes on in the SNM cargo industry.

"Have you heard about the three famous UF^6 shipments of March, 1969? One was mine. 33 kgs. U enriched to 90%, aboard an international flight to New York to Frankfurt, had been loaded on a mixed London-Frankfurt pallet. At London, the pallet was removed from the aircraft, and the London cargo was removed. The balance of the pallet just sat there while the aircraft took off and continued to simply sit at London. We were notified by consignee that the flight arrived without the shipment, and we swung into action. The airline quickly found the cargo, still sitting in London. No airline personnel at London or elsewhere had initiated any action. We had to tell the airline that the cargo was missing. Incredible -- you can bet your bottom dollar.

"Second famous shipment of March, 1969. Three containers of strategic material, gross weight 850 lbs.), left Goodyear on Wednesday, reached Columbus, were taken to Dayton, where they were loaded aboard air freighter for St. Louis for onforwarding to consignee by special truck. Two containers were delivered on Thursday. The third container appeared to be irretrievably lost, but was eventually found nine days later in Boston under a load of shoes. And how was it found -- a shoe store was tracing a lost consignment of shoes and Thank God -- they found the shoes -- with the strategic material underneath. Incompetence -- what else?

"Third March shipment. Four containers of strategic material were loaded aboard air freighter at Dayton for St. Louis on Friday. Saturday -- two of the four were delivered to consignee. No one with the air line could figure out what happened to the other two containers. Tracing followed, and the missing containers were located on Monday at St. Louis Airport, right where they were supposed to be. Incompetence -- nothing else.

"To sum up -- the environment of the transportation industry is one of incompetence, criminality, and unreliability." (Plutonium Diversion, Geesaman, Donald P.; Report before California Legislative's Assembly Science and Technology Council's Energy Panel, June 15, 1972, pp. 15, 16).

9. Incompetence and inefficiency are obviously not the only problems associated with the commercial air cargo industry. William Brobst former Deputy Director of the Office of Hazardous Material, DOT, now with the Energy Research and Development Administration ("ERDA"), in commenting on the then AEC's set of procedures to be followed in protecting special nuclear materials in transportation, stated:

"Although these procedures might be somewhat effective in discouraging the diversion of nuclear material by some bystander who is curious as to the contents of the package, I do not believe that they have any meaningful degree of effectiveness in even discouraging an intentional diversion by any person whose motives are subversive or economic." (Ibid. p. 11).

10. In this regard, Sam Edlow has confirmed Mr. Brobst's opinion on the effectiveness of safeguards procedures and "signature service" and has described the condition of the transportation industry into whose hands SNM were being committed. As he points out, the procedures are only as effective as they are wanted to be by those in the industry who implement them.

> "I was part of an informal meeting some few months ago attended by government personnel, representatives of major truckers, railroads, one airline, insurers, and freight claim agents. It was agreed that the transportation industry is so thoroughly infiltrated by the Cosa Nostra that any cargo which organized crime determines to obtain will be obtained. To put it another way no material is safe during transportation if organized crime decides to lay its hands on the material.....
>
> "How very often we read of thefts of bullion, jewelry, watches from secure rooms at air cargo terminals. The hijacking of aircraft is now a weekly occurrence. Today aircraft are hijacked to provide escape means to Cuba. Who here dare say that aircraft will not by hijacked for the nature of the cargo aboard - because of its high value or its strategic nature?
>
> "Gentlemen, the transportation industry is infiltrated by organized crime and must be adjudged incapable of providing reasonable protection for valuable or strategic cargo. The transportation industry is untrustworthy....
>
> "The high level of incompetency which has been achieved by surface and air carriers staggers the imagination. The inability of the air carrier industry to properly handle the cargo handed to it for air carriage now approaches a national scandal...
>
> "Signature service cannot and will not prevent loss, diversion, or mishandling of cargo. Further, signature service will not give early notice that shipment is lost, unaccounted for, or diverted. At most, it will single out a shipment as being something other than routine. That the regulation provides any more in the way of security, I question." (Ibid, pp. 13, 14, 17).

11. It is widely recognized in the industry and among defendants that a nuclear black market, if not already in existence, is bound to develop as SNM is successfully stolen in small or larger quantities. Commissioner Larsen, when still with the former AEC, publically conceded the point. (Atomic Energy Commission's Symposium on Ssafeguards, Research and Development, October 1969).

12. May 1970, the Institute of Nuclear Materials Management published a report on safeguards in transportation. The abstract of that report stated in part:

> "the transportation industry is characterized by its own press as... 'rotting at its core'...., law enforcement agencies advise that $1 billion dollars of merchandise is being hijacked or pilfered during transportation each year in the United States, and federal agencies acknowledge that organized crime has a strangle hold on the United States transportation industry. Into this milieu, professional managers of nuclear materials are currently shipping sufficient quantities of nuclear materials to produce nuclear weapons or to direct toward possible nuclear blackmail. The INMM Safeguards Committee explores these issues in this document and concludes that the postulated problem is real, current, at the alarm level now, and increasing in scope and risk."

13. Dr. Theodore Taylor, one of the foremost experts in the area of clandestine nuclear weapons use has noted professional criminals can be motivated, simply by the prospects of large profits, to steal fissionable material, for sale to high bidders. "Practically every highly valuable material has been traded in illegal national and international markets. It is hard to see why inadequately protected fissionable materials should be any exception" (December, 1971 AAAS Symposium on the Energy Crisis).

14. The irony of the present situation, particularly with reference to ERDA shipment of SNM, is pointedly addressed by former AEC Director Crowson, Division of Nuclear Materials Security. One of the anachronisms of the NRC policy is that strategic nuclear materials which are to be used for military purposes are shipped under military rules. But, if the same materials are to be used for civilian purposes - although they too could fuel a bomb - they are usually shipped in the words of Crowson "like a special delivery letter" (Science, April 9, 1971, p. 145).

II. Containment, Control & Handling

15. ALPA's independent investigation of the air cargo industry and the present scheme for radioactive materials handling has resulted in a number of findings all of which have been indisputably confirmed by Congressional investigations. Eight of these ALPA findings are as follows:

1) Most hazardous material shipments are carried in violation of federal safety precautions.

2) Shippers, freight forwarders and carriers routinely ignore or misinterpret the law and do not even have a copy of the applicable regulations available where they were needed.

3) The regulations themselves are outmoded, confusing and allow the carriage of materials which do not belong on passenger or cargo aircraft.

4) Inadequate fire-fighting equipment on airlines and the inaccessibility of hazardous

cargo make many potential in-flight emergencies impossible to deal with.

5) The entire regulatory scheme is threatened by the pervasive issuance of exemptions from the regulations, without any notice to the public or opportunity to protest unsafe operations.

6) The overlapping jurisdiction of government agencies hampers effective regulation.

7) The Federal Aviation Administration's inspection program in the field is virtually non-existent.

8) FAA's laxity in enforcement leaves hazardous materials regulation violators totally undeterred.

16. This situation is severely aggravated by the fact that the FAA, the agency that purports to be the safety regulation agency for the industry, only regulates safety on a spot-check basis between the official business hours of 8:30 a.m. to 5:30 p.m. Yet most of the major air freight activity, for example at John F. Kennedy International Airport, takes place between midnight and 6:00 a.m. The Washington office of ALPA can document numerous instances of inaction by the FAA after specific requests for attention to certain shipments had been made to appropriate FAA personnel.

17. On January 5, 1975, the Deputy Secretary of DOT established a Task Force to review the movement of such hazardous materials in air commence. Its report, filed on March 19, 1975 contained a number of significant findings:

1. Based on inspection of carrier

facilities and carrier personnel, many of the receiving agents, who in most cases are the first persons to physically examine these materials, have received only a minimum amount of training and their acceptance of freight was determined by consulting CAB tariffs or IATA regulations, not the DOT regulations as required by federal law. As a matter of fact, of seven air carrier facilities visited at JFK and Philadelphia airports, only three had copies of the DOT regulations.

2. Although notification to the pilot in command has been required for more than 25 years, there is no uniform notification form and many of the notificiation forms checked contained discrepancies which were in violation of the requirements of 14 CFR 103.25.

3. The Task Force reported that it examined training programs which varied in duration from 30 minutes to 16 hours. However, many of the longer programs required that the student to do a lot of the work on a home study basis and included that time in the total. The Task Force found that, although the awareness of air carrier personnel has improved, the person receiving the least training time was the agent on the receiving line who, by the very nature of his job function, comes into first contact with the hazardous materials. This same criticism has been noted in every

study made on the hazardous materials problem since the Pan Am crash of 1973. The training requirements have been in effect since December 6, 1973 and all programs must be approved by the FAA; yet this problem has not been rectified.

18. The practices, attitudes and performance records of the industry and the federal regulatory agencies only increase the hazards inherent in the commercial air transport of such cargo As recently as June 19, 1975 Assistant Secretary of the DOT bemoaned at a speech in San Francisco the continued poor compliance record of hazardous materials shippers. General Benjamin O. Davis Jr. said that DOT had found ". . .that about 75 percent of all shipments checked on air terminals and elsewhere were in violation. . .of applicable safety rules."

19. As a final note, with regards to the repeated statements by defendants that radioactive materials shipment has gone on for 25 years with complete safety, this is another distortion of the real facts by NRC and others. As to SNM, there have been, to my knowledge, no catastrophic releases of plutomium other than the Thule and Palomares spills (See Affidavit of John F. Shea, III, June 16, 1975). However, we have experienced disasters involving the air shipment of other radioactive materials where human error defied all computations as to the probabilities of such events. Attached is a report concerning just one of such instances where radioactive materials, caused a serious emergency involving contamination of hundreds of persons and valuable property in several cities. Specifically the report describes the Delta incident of December 31, 1971 which resulted in the radiation exposure of 917 passengers who had been on board a plane carrying liquid radioactive materials. As the report notes, "an unfortunate chance combination of human errors

resulted in this incident" (Exhibit "A", p. 48).

20. The defendants argue a dangerous line. We are to wait for the purportedly "remote" event of an accident or diversion of SNM in commercial air transport rather than preclude the event by removing SNM from such commercial mode now. I personally and professionally believe that to continue to follow such a scheme would be an irresponsible course of action on the part of defendants and, accordingly, support the State of New York's request for injunctive relief and summary judgment.

Capt J A Eckols
CAPTAIN JAMES A. ECKOLS

Sworn to before me this
28 day of November, 1975
St. Charles Mo
Arthur Bunch
My Comm expires 7/31/77

NATIONAL TRANSPORTATION SAFETY BOARD
Washington, D. C.

EXHIBIT A

REPORT OF AIRCRAFT RADIOACTIVE
CONTAMINATION INCIDENT, DELTA AIR LINES, INC.,
DECEMBER 31, 1971

TABLE OF CONTENTS

ATTACHMENTS

Appendix A

REPORT OF AIRCRAFT RADIOACTIVE CONTAMINATION INCIDENT DELTA AIR LINES, INC., DECEMBER 31, 1971

I. SYNOPSIS

A small quantity of radioactive material leaked from a bulk shipment onboard Delta Air Lines Passenger Flight 925 of December 31, 1971, while the shipment was en route from the manufacturer in Tuxedo, New York, to the consignee in Houston, Texas. The aircraft, Convair 880, N8801E, was contaminated and 917 passengers had traveled aboard it before discovery of the leakage and removal of the aircraft from service at Chicago, Illinois, O'Hare International Airport on January 2, 1972. The aircraft was ferried to Atlanta, Georgia, where it was decontaminated under the supervision of the Georgia Department of Public Health and the United States Atomic Energy Commission (AEC). By telephone contacts and press releases, passengers who had flown on this aircraft between the time of aircraft contamination and its removal from service were afforded an opportunity to determine the extent of exposure to themselves and to their baggage.

II. INVESTIGATION

A. BACKGROUND

The investigation of this incident was conducted in a sequential manner beginning with the manufacturer's packaging through shipment, discovering of excessive radioactivity, subsequent action, to corrective measures as a result of this incident.

B. FIELD INVESTIGATION

1. Manufacturer/Shipper

The Union Carbide Corporation (UCC), Sterling Forest Research Center, Post Office Box 234, Tuxedo, New York, is licensed by the AEC to operate a nuclear reactor in the State of New York. The AEC retains licensing authority over reactor operations. New York is an Agreement State under Section 274 of the Atomic Energy Act of 1954, as amended, and can, therefore, regulate possession and use of nuclear materials within the state.

Radioactive Material

UCC advised that the subject shipment was a routine bulk shipment of molybdenum 99 (Mo 99) in 3 normal sodium hydroxide solution, which had a 66.5 hour half-life. This had been a standard Friday afternoon shipment to Bio-Nuclear Laboratories in Houston, Texas, on a weekly basis for the past 12 to 18 months for consignee pickup at the airport.

Processing

The material was processed in the UCC reactor and moved from there under water (shielding) to hot cell #2 where it was placed into two 500 ml. (or 1 pint) polyethylene screwcap bottles.

Bottling
(Primary Container)

The bottles were approximately 7 inches high and 3 inches in diameter with a 7/8-inch inner diameter and 1 3/8-inch outer diameter neck. The bottling operation in the hot cell was performed behind a 4-foot-thick window, using a pair of mechanical manipulators each of which has two wide opposing metal fingers. The manipulators exert a force similar to that applied by the operator as they provide no mechanical advantage.

To cap the bottles, the neck of a bottle was held by one manipulator while the screwcap was closed down as tightly as possible, "finger tight," with the other manipulator. The plastic cap was 1 3/8 inches high and 1 5/8 inches in diameter.

Packaging
(Secondary Container)

The bottles were placed on a conveyor cart and transported to the conveyor station at the back of the hot cell complex, where each bottle was placed, with the aid of a single manipulator, into a secondary, shielding container. This was a stainless steel/lead lined container called a "pig." The outer dimensions of the pig were 12 inches high and 8 1/2 inches in diameter. The inside space was 3 1/4 inches in diameter with a 1 7/8-inch deep inner ledge at the top. The pig had been decontaminated thoroughly and was placed in the receiving station, which was just below the conveyor station, before the bottles were moved from hot cell #2.

A shielding plug top with a neoprene type gasket was then put in place and the pig was lowered onto a dolly. The heavy shield door was opened and the shipment was wheeled out of the conveyor station to the packaging area. The plug top was bolted down onto the pig with four ½-inch bolts. Smears (paper swipes) were taken to verify that there was no contamination on the outside of the pig.

Outside Wooden Protective Jacket

The pig was then lowered into a wooden overcoat or jacket, the top of which was bolted down onto six 1/2-inch steel bolts. The outer jacket was a 4-inch-thick layered plywood container, the dimensions of which were 23 inches high by 23 inches in diameter. It was secured to a 5-inch-high, 28-inch square pallet to facilitate handling by forklift. Readings were then taken of the radioactivity on the surface (200 mR/hr) and at 1 meter distance (8 mR/hr). The packages were labeled, sealed with a lead seal, and moved onto the loading dock where they were smeared once more before being loaded by crane onto a company truck for forwarding. An illustration of the containers appears in Attachment A-1.

UCC had no written procedures for the maintenance of reuseable Type B pigs and wooden jackets. When these containers were returned by motor freight, they were checked for any

contamination, decontaminated if necessary, and examined by personnel from the packaging area to assure that these containers appeared to be in satisfactory condition for reuse.

Contents

Each of the two polyethylene bottles in this shipment contained 283.5 ml. of Mo 99 in liquid form and the calibrated isotope specification for each was 65,200 mCi (millicuries). When packaged for shipment, each completed piece weighed 430 pounds and had a Transport Index (TI) of 8. The total shipment was two pieces at 860 pounds with a TI of 16.

The labeling of the packages was as follows:

a. Metal tag secured to outside of jacket (reproduced below)

RADIOACTIVE MATERIAL		
U.S.A.	D.O.T.	S.P. 5800
Type -B		Wt. 90 kg
UNION CARBIDE CORPORATION TUXEDO, NEW YORK		

b. Two Radioactive Yellow–III labels on opposite sides of each jacket, (see Attachment A-2a).

c. One address label glued to jacket, (see Attachment A-2b).

d. "Packing" slip envelope (white with red print) glued and taped to jacket (containing UCC Order - Invoice 28856 and a copy Airbill Number 006 JFK 432 4103, prepared by the shipper) (see Attachment A-3).

e. Manila envelope taped to jacket, rubber stamped in red, "Department of Transportation Special Permit No. 5800," containing copy of the permit, (see Attachment A-4).

Transport

At 2:10 p.m., Friday, December 31, UCC delivered the subject shipment to the Delta Air Lines air freight dock at John F. Kennedy International Airport, Jamaica, New York (JFK) in their own Chevrolet Carryall, a 3/4-ton truck.

Other UCC shipments were also delivered to Delta Air Lines in the same movement. These shipments included 4 cartons of radioactive material weighing 515 pounds which were consigned to Hastings [illegible] JFK 327 4114. One piece was a pig slightly smaller than, but similar to, that consigned to Bio-Nuclear Laboratories.

The larger radioactive shipments were moved by forklift from the truck and placed onto an airline cargo cart with dropsides.

2. Carrier

Delta Air Lines, Inc., Atlanta Airport, Atlanta, Georgia, 30320, is a Delaware corporation with headquarters [illegible] in Atlanta, Georgia. The company operates as a scheduled air carrier under a

currently effective certificate of public convenience and necessity issued by the Civil Aeronautic Board, and an operating certificate issued by the Federal Aviation Administration (FAA).

Delta personnel received the Bio-Nuclear shipment at their air freight terminal at JFK an signed for it in good order with no exceptions noted.

Receipt

The shipment was received on the Delta ramp and moved from the delivery truck onto a Delt Wollard Baggage Cart, Model BC-450, where it remained until it was taken out to the flight lir for loading into the aircraft. It was not taken into the warehouse.

Load Planning

The load agent, in working the load, found he had more than 50 TI's, which is the maximar allowable on one aircraft. Therefore, he held one shipment of radioactive material destined tc Houston until Delta's next departure, passenger-carrying Flight 981 of December 31, which wa scheduled to depart only 2½ hours after Flight 925. This shipment was shown on airbill JFK 4327 4136. It weighed 33 pounds and had a TI of 8. Flight 981 loadpapers are Attachment A-5

Dispatch

Flight 925 was dispatched with a total TI of 48, consisting of two shipments to Houston ir Cargo Bin 3:

No. of Pieces	Weight (lbs.)	Airbill No.	Transport Index
2	575	JFK 4327-4114	17
2	860	JFK 4327-4103	16*
		*to Bio-Nuclear	
and one shipment to New Orleans in Cargo Bin 4:			
6	228	JFK 4377-3811	15

The captain was so advised by the Restricted Articles Notice form attached to his clearanc release (see Attachment A-6). Other freight, air mail, and first class mail were also loaded in bin 3 (see Flight 925 dispatch records which are Attachment A-7).

Cargo Bins

The Convair 880 has two cargo bin areas below the passenger compartment floor, one forwar of the wing and the other behind the main landing gear and hydraulic compartments. (s Attachment A-8). They are each 19 feet long by 3 1/2 feet high and each has one 38-inch w access door in the middle of the bin on the right side of the aircraft. However, the push-in d cargo net, and fuselage limit the height of the entrance to 20 inches (see Attachment A 9). convenience, Delta numbers their cargo bins #1 through #4. The forward section of the fus

bin is #1; the aft section of the forward bin #2; #3 is the forward section of the aft bin; and the aft section of the aft bin is #4.

Passenger Load

On departures from New York and New Orleans, the aircraft was occupied as shown in the following chart:

Crew: 3 Flightcrew (cockpit)
3 Stewardesses (cabins)

From New York	1st Class (Forward Cabin)	Coach (Aft Cabin)
No. of seats available	24	96
Passengers to New Orleans	1	30
Houston	0 + 1 (Nonrevenue)	19 + 1 (Nonrevenue)
Total	2	50
From New Orleans to Houston	0 + 2 (Nonrevenue)	22 + 1 (Nonrevenue)
Total	2	23

Cargo Loading

The Ramp Agent and two Ramp Service Agents who loaded the three heavy Bio-Nuclear and Hastings radioactive pieces of freight reported that the loading procedures for bin 3 were as follows:

The International Scout Conveyor - Model TC-476 was placed at the cargo bin door (see Attachment A-10). The sides of the baggage cart (in this case freight cart #12) were dropped to make it more nearly a flat bed and it was maneuvered to a position directly under the low end of the conveyor belt (see Attachment A-11). From there the first 430-pound piece was tipped on its side and lifted by two men until it started up the belt, at which time it was rolled over onto its flat top because the pallet on which it was secured extended 2 1/2 inches beyond the wooden jacket and hampered the operation by digging into the belt. It was balanced by one man as it progressed up the belt to the cargo bin door. The conveyor height was adjusted lower so that the pig could then be rolled over onto its side and worked into the cargo bin from

where it was pushed all the way forward in the bin. There was no apparent damage done to th shipments during loading, and handling was held to a minimum because of the weight. Afte the heavy pieces were placed, the following Houston cargo was loaded into bin 3:

No. of Pieces	Weight (lbs.)	Class
12	214	Air Mail bags
5	132	First Class Mail
9	207	Air Freight

Intermediate Stop

The compartment was opened in New Orleans; however, there was no freight or mail to b off-loaded from the forward section, bin 3, so New Orleans personnel were not involved with an of the contamination.

Radioactive Material Training

The Delta Air Lines training supervisor at JFK was not interviewed personally because he wa out of town on a business trip, but he prepared a statement which reads as follows:

"My training schedule at JFK follows prescribed company schedules and material. All ne employees with Delta who have contact with radioactive materials are given training in the first week of employment. In addition all employees are given recurrent training once eac year on radioactive materials.

"Our source of material for training are:

1. Hazards of Radiation in Shipping Radioactive Cargo, (Book).
2. Radioactive Materials (Standard Practice 805).
3. Air Cargo Restricted Articles (Standard Practice 891).

"Included in this training our employees are shown the shipping labels used, the total amoun of Transport Index allowed on our aircraft, and the bins we allow radioactive materials in.

"Also I instruct employees in handling, distances, and dangers should package becom damaged.

"Our Load Agents, Ramp Agents and Supervisors are instructed on the above, however, the receive additional training such as notification of Pilots of all restricted articles onbo proper entries on our load message (teletype), and those agencies to notify in case of damaged shipment."

Cargo Off-Loading

At Houston, the four Ramp Service Agents who off-loaded the Houston cargo reported th luggage from bins 1 and 2 was off-loaded first, then the freight cargo from bins 3 and 4. [illegible] reported that the three heavy containers of radioactive materials in bin 3 were lying on their [illegible] and were not standing in upright positions. "Nothing unusual was thought of this as they [illegible] be turned sideways, tilted, etc., to get them in and out of Convair 880 plane cargo [illegible] There also was moisture noted on bin floor, but this is not uncommon as many times a [illegible]

loaded in the rain or bad weather and moisture is carried into a bin area on cargo." The two men at the foot of the conveyor belt slid the containers off the belt onto a cart. "Since these articles are very heavy, 430 lbs. each, we had to slide them off the belt and in doing so they have a tendency to fall on their side." As each container was off-loaded the men got up on the cart, set them upright, and positioned them on the cart.

Warehouse Storage

The three heavy containers of radioactive material and several small boxes containing radioactive material were then taken to the freight warehouse where they were left on the cart overnight, separated from any other airfreight. A shift change followed this activity, but the next morning, January 1, the Bio Nuclear shipment was unloaded from the cart in the warehouse by the same man who later helped load it on the consignee's pickup truck the following morning, January 2.

Aftermath

The handler who worked inside cargo bin 3 during the off-loading at Houston was contacted at 4:30 p.m. on Sunday, January 2, and advised of the contamination problem. His work clothing was found to be contaminated, and he was given a medical examination which revealed no apparent injury. He subsequently reported a burn area on one leg which had been exposed to the contamination. An examination of this condition revealed that it was "...a chemical reaction from the solution the radioactive material was in."

3. Consignee

Bio-Nuclear, Inc., 6006 Schroeder Road, Houston, Texas, 77021, is a subsidary corporation of the American Biomedical Corporation, Dallas, Texas. It is a Texas State licensed radioactive materials processor. At the time of the incident, Bio-Nuclear did not have a Health Physicist on its staff.

They have been receiving from UCC weekly bulk shipments of liquid Mo 99 for over a year and use it to process Technetium (Tc 99), a daughter of Mo 99 with a 6-hour half-life. Tc 99 is a radioisotope used by the medical profession for diagnostic purposes. Routinely, the shipment is sent on Fridays. The consignee's plant is closed on Saturdays. The shipment is picked up early on Sundays, for Sunday night processing and early Monday distribution to customer hospitals and doctors.

About 7 a.m. Sunday, January 2, the Bio-Nuclear shipment was picked up by their driver from the Delta freight dock at Houston Intercontinental Airport. Hastings Radiochemical had previously discovered that its consignment was contaminated, and that company notified Bio-Nuclear of the possibility that the Bio-Nuclear consignment was also contaminated. The Bio-Nuclear packages were surveyed with a Ludlum Geiger counter (2000 mR range), and the reading was off the top of the scale. Traces of white powder also were found on the rim of the pig. The liquid remaining in the two plastic bottles was transferred to the extractors as quickly as possible to minimize radiation exposure. No measurements were made of the amounts actually in the bottles, but it was noted that the liquid level in one bottle was lower than those of previous shipments, and the inside of the pig was wet. The packaging containers and absorbent papers used for handling were removed to a remotely located warehouse.

Bio-Nuclear called Delta Air Lines, informed them of the findings, advised them to check the employees who handled the shipment, and gave interim instructions on decontamination procedures. After moving the contaminated containers to the warehouse, Bio-Nuclear notified the Texas State Health Department.

4. Activities After Discovery of Contamination

a. Notification

There are specific requirements for the carrier to make immediate notification to the nearest FAA facility by telephone in certain cases of dangerous article incidents. Breakage of a shipment calls for immediate notification to the shipper and the Department of Transportation (DOT) and a report within 15 days to the DOT, Hazardous Materials Regulations Board. It is required that a copy also be sent to the FAA facility which was first contacted (14 CFR Part 103.23, Part 103.28 and 48 CFR Part 171.16).

Since the shipment appeared to be in good condition at the time of consignee pickup, and the carrier was not immediately alerted to the possibility of contamination, it was several hours before all concerned parties were notified of this incident. Official records of the first few original notifications are either nonexistent or very sparse. Consequently, the attached notification chart (Attachment A-12) is a reconstruction of the approximate sequence of events since almost all times shown are estimates.

b. Postincident Activity

(1) Aircraft Movement Until Taken Out of Service

Delta Air Lines did not know that their plane, Convair 880, N8801E, was contaminated when it arrived in Houston before midnight on December 31, 1971. Consequently, the aircraft was continued in regularly scheduled passenger service until it landed at O'Hare International Airport, Chicago, Illinois, about 8 p.m., January 2. Following is a chart which shows the flight numbers and cities involved during this period of operation while the aircraft was contaminated:

Flight/Date	Origination	Intermediate Stops	Termination
#925 Dec. 31, '71	New York, N.Y.	New Orleans, La.	Houston, Texas
#998 Jan. 1, '72	Houston, Tex.	Atlanta, Ga. Dayton, Ohio Columbus, Ohio	Miami, Fla.
#952 Jan. 1, '72	Miami, Fla.	West Palm Beach	Chicago, Ill.
#939 Jan. 1, '72	Chicago, Ill.	Louisville, Ky. Atlanta, Ga.	Tampa, Fla.

Flight/Date	Origination	Intermediate Stops	Termination
#992 Jan. 1, '72	Tampa, Fla		Atlanta, Ga.
#1951 Jan. 2, '72	Atlanta, Ga.		Miami, Fla.
#1942 Jan. 2, '72	Miami, Fla.		Atlanta, Ga.
#955 Jan. 2, '72	Atlanta, Ga.		West Palm Beach, Fla..
#954 Jan. 2, '72	West Palm Beach, Fla.	Tampa, Fla.	Chicago, Ill.

The aircraft arrived in Chicago, Ill., at 6:30 p.m., was surveyed, and taken out of service.

Ferry Jan. 2	Chicago, Ill.		Atlanta, Ga.

(2) Aircraft Contamination

The aircraft was initially surveyed by the AEC at Chicago, O'Hare International Airport after 7:00 p.m. on Sunday Jan. 2.

Instrument: Juno Model #7 survey meter
Readings:
- at rear cargo door - 50 mR/hr.
- In center of cargo bin 3 - 500 mR/hr. to 3R/hr.
- In aft passenger cabin at seats 34 & 35 - 200 mR/hr.

The scheduled flight was cancelled and the aircraft was moved to the hangar area until it could be ferried to Atlanta.

On arrival of the ferry flight at Atlanta, the Georgia Department of Public Health, and the AEC, assisting in the emergency, again surveyed the aircraft.

Instrument: [illegible] (Geiger-Muehler scanner) with 30 mg/cm² probe.
Readings:
- Contact reading on floor under seat 34-140 mR/hr.
- Highest reading on bottom of seat 35-60 to 70 mR/hr.

Instrument: Eberline E-120 (maximum range of 50 mR/hr).
Readings:
- Forward end of cargo bin (without handprobe) - 3 to 4 R/hr. (estimate based on state of reading).
- Smear at forward end of cargo bin - 2R/hr.
- Smears on spots generally in middle of cargo bin - 4 mR/hr. to 10 mR/hr. (contaminant could be wiped out).

- Air inlets (at side of cabin just below hatracks) above seats 34 & 35 - low level traces of smearable contaminant.
- Air exit vents (outboard of and below the seats) at seats 34 and 35 - little more than a trace (see Attachment A-13 for seat locations).

Seat and floor readings were the result of direct radiation from the leaked radioactive liquid source. Smearable contamination resulted from airborne radioactive particulate (e.g., dust).

There was no contamination found at the adjustable ventilators installed over the individual passenger seats. (See Attachment A-14 for details of Convair 880, Air Distribution System.)

The only access route for air movement between the cargo compartment and the aircraft ventilating system was a 2 3/4-inch breather hole provided in the sidewall above the cargo door to permit pressure equalization between the passenger compartment and the cargo area. On depressurization, air from the cargo compartment exhausts into the outflow side of the system to the outflow valve. Air in the cargo compartment is generally static except during cabin pressure changes. (See Attachment A-9 for location of breather hole.)

(3) Aircraft Decontamination

The Georgia Department of Public Health, Radiological Health Service in Atlanta, took charge of and actually decontaminated the aircraft and was assisted by Delta Air Lines personnel. The AEC Regional Compliance Office in Atlanta, although primarily a regulatory organization, served as coordinating office. They worked with DOT, FAA, and the carrier. AEC Operations Division personnel furnished Radiological Assistance Team support where necessary.

After determining that the cargo bin was constructed with a fiberglass liner taped to the structure and a metal floor, it was decided to remove the liner from bin 3 and strip out the old tape.

Personnel who were to enter the cargo bin were dressed in full length cover-alls, rubber boots, rubber gloves and were equipped with a Martindale respirator, two dosimeters (instruments for measuring doses of radioactivity) and a film badge. The first man into the bin was allowed a maximum exposure time of 15 minutes. His dosimeters read 38 mR. Consequently, the next man in was allowed 45 minutes to work and his exposure was [illegible] mR. The man in charge of the operation who was in the midst of the activity the entire time had a 100 mR reading on his self-dosimeter.

The fiberglass floor liner, when removed, showed 2-plus R/hr., as did two panels of the metal underfloor and cargo tiedown rings, which were also removed. Air tools were used and insulating material was vacuumed out. The inside was then scrubbed with liquid soap and rinsed, but was not flushed, to avoid possible spreading of the contaminant. On Monday, January 3, 1972, at 3:30 p.m., the aircraft was released. When surveyed, the readings on the aircraft structure (excluding the cargo bin liner, which was removed) had ranged from 160 mR/hr. to 2-plus R/hr. On completion of the decontamination, the maximum contact reading was only 50 mR/hr. under the aircraft belly.

On January 6, one week after the incident and more than 3 days after decontamination, the aircraft made its first landing in Tampa, Florida, where it was checked for radioactivity and was found to be contaminated. Accordingly, the aircraft was sent back to Atlanta for further checking and decontamination, as necessary. There were two spots in the cargo bin

where contact readings could be found. The tape was stripped out and no removable contamination was present. The aircraft was again returned to service.

This incident provided an example of the differences in response to tests for radioactive contamination resulting from different scanning equipment utilized, proximity to the source, and the interpretation given to the various readings.

(4) Employee and Passenger Involvement

The first consignee (Hastings Radiochemical) to receive a shipment from the subject flight, discovered the contamination by normal scanning. They checked the employees and equipment before the contamination had time to spread in their facility. By the time Bio-Nuclear was notified the following day of the possibility of contamination, their driver had picked up the shipment at the airport. However, on receipt of the shipment at the plant, they handled it as a "hot" shipment. Consequently, there was no contamination spread throughout that facility.

The first word of this incident received by the manufacturer was followed by a check of their facilities which revealed no contamination on their equipment or employees.

By the time the carrier was notified, the contaminated aircraft had been through airports in 10 cities; many employees had serviced it with numerous pieces of airline equipment; and much freight, express, and mail had been moved in its cargo compartments. Most of these could be traced, but the mail was the exception. However, the major problem confronting the airline was the 917 passengers who had flown onboard the aircraft and had their baggage in one of the cargo compartments.

The AEC established scanning stations in the various cities involved and established a set of guidelines for Delta to implement (see Attachment A-15). Meanwhile, Delta personnel started with the ticket flight envelopes and started backtracing the people who were shown to have been onboard the aircraft. More than two-thirds of the total number were contacted personally by telephone, and the press was used in certain off-route areas to advise passengers of the problem and offer professional assistance to scan them and/or their baggage.

Survey check stations were set up in the ten cities at which the contaminated aircraft had stopped. The personnel from these check stations also surveyed eight homes on request. Passengers were advised by phone and the news media that they could either come to the check stations or contact their state health agencies. Arrangements were made for the employees who had actually worked the shipment to have total body scans performed at other places, such as local hospitals or medical schools which had the facilities to perform this task.

The results of the passenger survey indicated that neither passengers nor employees had been subjected to a personal health hazard although some had been exposed to more radioactivity then is acceptable under the concept of the lowest practical exposure of people to radiation. This information was also reported in the press.

(5) Baggage Involvement

One hundred twenty-four passengers brought 271 various articles plus two dogs to the survey check stations for examination. Numerous bags were found with a small amount of contamination, and there were some with comparatively high levels of contamination.

Subject of observation.	Unit identified as #40	Unit identified as #16
Polyethylene bottle (primary container).	Reportedly, water had replaced radioactive liquid to the top of bottle and top had been secured finger tight: Bottle resting down in beaker with some liquid in the bottom. When the bottle was squeezed between fingers, liquid escaped.	

Thirty-eight days after the shipping incident, the containers were viewed again after they had been returned to UCC. They were in the plant, but isolated in a roped-off quarantine area. The container parts were still too radioactive to be handled.

During this visit to the plant, a demonstration of the polyethylene bottle filling process was conducted by the hot cell operator who had filled the bottle for the subject shipment. For this demonstration, however, water was used instead of a radioactive material. The process followed that which was described earlier in this report. After the demonstration bottle was removed from the hot cell and checked for any contamination, it was picked up with gloves, and when tipped upside down, the water leaked rather freely. Then the "tightness" of the screw-cap was checked. Although it had appeared to be on securely, it was only "manipulator-finger" tight. It released and unscrewed with only very light fingertip pressure. Subsequently, the top was tightened with fingers and the thumb around the cap and the seal then contained the liquid inside.

III. CORRECTIVE ACTION

Subsequent to the incident, there was a concerted effort toward eliminating the potential for another incident involving a radioactive material leak which could contaminate cargo and baggage areas in aircraft and/or endanger passengers or the public at large.

The manufacturer, UCC, took several actions that included:

- Meeting with the Atomic Industrial Forum, which is an industrial trade association comprised of radioisotopes manufacturers, shippers, processors, etc. The Radioisotope Committee agreed to develop new, effective, and workable container leak-tests that could be adopted by the American Standards Association.
- Discontinued use of the old polyethylene filler bottle for a new one with a different sealing arrangement.
- Evaluation of an induction-welded sealing cap for the primary container.
- Primary container for liquid shipments are now leak checked to 25 inches of mercury before they leave the hot cell.
- Changed from handmade neoprene gasket for the pig to manufactured natural gum rubber

gasket for better seal.

- Consideration of a change to a plug type gasket that would fill the remaining space around t top of the polyethylene bottle.
- Pigs with gaskets to be leak checked once and then rechecked again each time a gasket changed.
- Consideration of a leak-check for the bottle and secondary container pig for each liquid, Ty B and Iodine shipment.
- Initiating a preventive maintenance program with records kept, using newly assigned se numbers to pigs.
- Instituted an administrative change which requires two people (packer and man who work hot cell) to check the packaging of each shipment.

The carrier proposed to the Civil Aeronautics Board that shippers of radioactive material in Ty B packages be required to conduct a leak-test at the point of origin; and state in writing that t consignee will perform a wipe-test within 3 hours of shipment arrival at destination. This will ass that packages are safe to carry on aircraft and determine if leakage has occurred during flight. T tariff became effective March 12, 1972 and is to expire June 12, 1972. CAB Order No. 72-3- dismissed the complaint against it.

IV. ANALYSIS

Of primary concern in this analysis are the conditions leading to the leakage of a bulk radioacti shipment in liquid form which contaminated equipment and exposed the public to higher levels radiation than the generally acceptable minimum. Reports of all the authorities concerned with t incident assured those people who were involved that the exposures encountered did not constitu health hazard. It did, however, create many harrowing hours of activity and concern for the passeng on the flights; for employees who handled the contaminated package and subsequently used t contaminated equipment; and for the personnel responsible for decontaminating of equipment a scanning people and baggage for radioactivity.

There is no shortage of regulations governing the manufacture, transportation, and use radioactive materials. Admittedly, the regulations are rather complex and spread throughout seve different volumes, but they are specific in the requirement that the radioactive material must contained.

The manufacturer was thoroughly familiar with the product, how to handle it safely, and the Ty B packaging being used, because this had been, for more than a year, a routine weekly bulk radioact shipment to the same consignee.

The manufacturer's employees reportedly had operated a nuclear reactor and packaged the prod for shipment over the year without injury or incident. The redundant (primary and second container) Special Permit authorized packaging was designed to survive major accidents transportation without releasing the contents. These requirements covered impact, as wel subsequent fire.

Possibly the aforementioned familiarity with the reusable Type B containers led to a relax approach in the maintenance of the stainless steel/lead-lined pigs. There was no written compl procedure for assuring that each pig met the standards for reuse. The plastic inner bottles apparently served well, and there seemed to be no reason to especially mistrust them or their secur Even for the demonstration filling of a typical plastic bottle; the liquid (water) was not contained the screw cap as it was installed by the operator/manipulator combination. However, it was noted the top could easily be screwed down tightly enough with bare hands to have satisfactorily contai the liquid. Apparently, the final main bottle seal had not been tested [illegible].

"This Side Up" labels were not required on the outside of the packages. If the containers are satisfactory, there should be no need for this addition. However, the outside wooden protective jacket is shaped with a pallet/platform bottom which would tend to indicate which way it should be carried, if for no other reason than to spread the load over a larger section of the cargo bin floor.

The bulk of the individual 430-pound package necessitated normal upright handling by forklift and crane. However, it did create problems when it came to loading the 28-inch-high package into a 20-inch-high access door of a CV-880 cargo bin. There was room, once inside, for the package to have been turned upright onto its pallet base. If this had been done, the bottle would have had only about 10 minutes to leak rather than approximately 4 hours. Accordingly, the radioactive liquid probably would not have leaked outside the secondary container. This would also have prevented subjecting the bottle to air pressure changes while it was upside down.

The carrier indicated that it had a training program wherein the employees were instructed in handling radioactive shipments. The AEC in Atlanta reported that they had given instruction on this subject to the carrier's management personnel for relaying to the cargo handler (Ramp Service Agent) level. Some of the Ramp Service Agents interviewed had received such instructions, but others of the cargo handling personnel indicated that the instruction had not been given to them.

Although it was preplanned, the delay by the consignee in picking up the shipment added to the magnitude of the problem, as did the loose notification procedures and the lack of a specific emergency procedures plan. These aspects delayed a timely discovery and immediate initiation of remedial measures.

Subsequent to the original interview of the Georgia Department of Public Health personnel, the Radiological Health Service representative, who was in charge of the aircraft decontamination in Atlanta, was contacted for some additional information and for clarification of some reports. During discussion of the "traces" of contamination reportedly found in the passenger cabin air inlets and air exit vents, it was determined that air vent contamination was not a problem since the trace readings were insignificant, and the origin of the contaminant was questionable. It was explained that the smears/wipes of the upper and lower grids of the ventilating system were made and placed in envelopes, then into a bag. Following this activity, the smear/wipes were made in the highly contaminated cargo compartment. These were then placed in envelopes and *all* envelopes were taken to the laboratory.

At the laboratory, the contents of the 20 to 30 envelopes, some of which were "extremely hot," were then placed inside glassine envelopes. The multichannel analyzer with a 5-inch sodium iodide crystal indicated only traces, approximately 300 counts/min. or less. This is considered to be an insignificant amount, and it is suspected that this trace amount was the result of cross-contamination of the specimens, especially since the entire air flow is into the cabin through the inlet, out of the cabin by the exit vent, past the cargo bin breather, to the outflow valve.

V. FINDINGS

- The reusable Type 2 packaging used for transporting the subject radioactive bulk shipment in liquid form did not fulfill the containment requirements of the regulations.
- The manufacturer did not have a standard maintenance procedure for overseeing the condition of the returned Type B pigs before reuse.
- An unfortunate chance combination of human errors resulted in this incident, i.e., plastic bottle top too loose, pig gasket in unsatisfactory condition, package rolled onto and left on its side during transport. The removal of any one of these steps from the sequence would have prevented this incident.

- The carrier's training program for handling radioactive materials had not reached all cargo handling personnel.
- A routine delay in pickup of the shipment by the consignee and the lack of a specific emergency plan for incidents such as this prevented timely discovery of the situation and initiation of immediate remedial action. This resulted in increasing the magnitude of the problem.
- Trace indications of radioactive contamination in the passenger cabin ventilating system were the result of cross-contamination of the specimens as they were taken to the laboratory.
- Reportedly, there was no health hazard to passengers or employees involved in this incident.

VI. CONCLUSION

It is concluded that this incident occurred because of the improper packaging of a bulk liquid radioactive shipment in a poorly maintained reusable Type B container. A contributing factor was the transport by air with the package lying on its side.

ATTACHMENT A-1

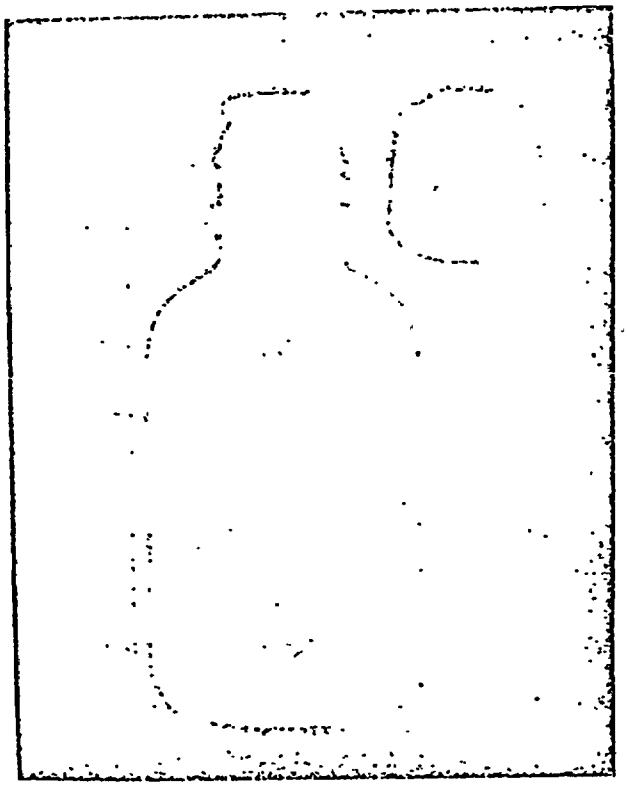

Typical PRIMARY CONTAINER
Polyethylene bottle

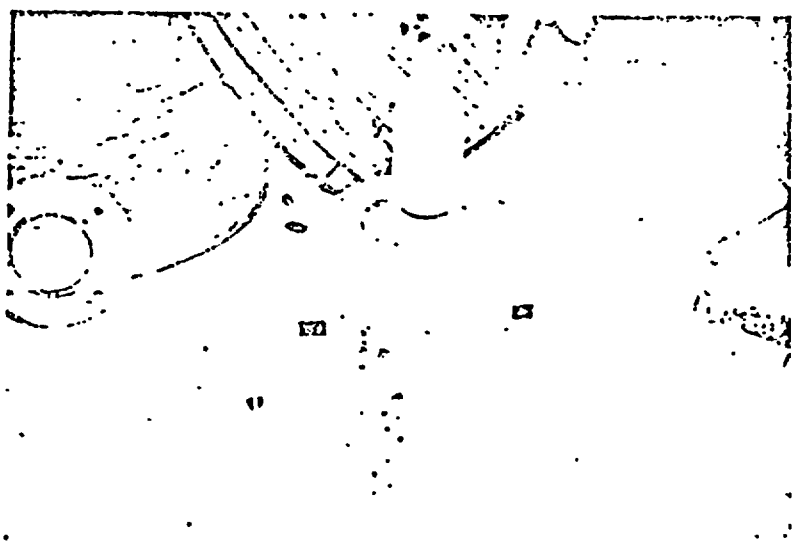

SECONDARY CONTAINER "PIG"
Stainless steel/lined
Bio-Nuclear package # 40

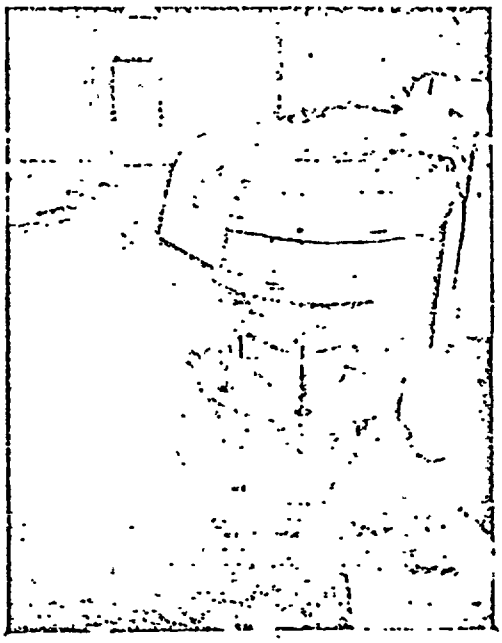

Typical - DOT SP-5800
SHIPPING CONTAINER
Wooden protective jacket

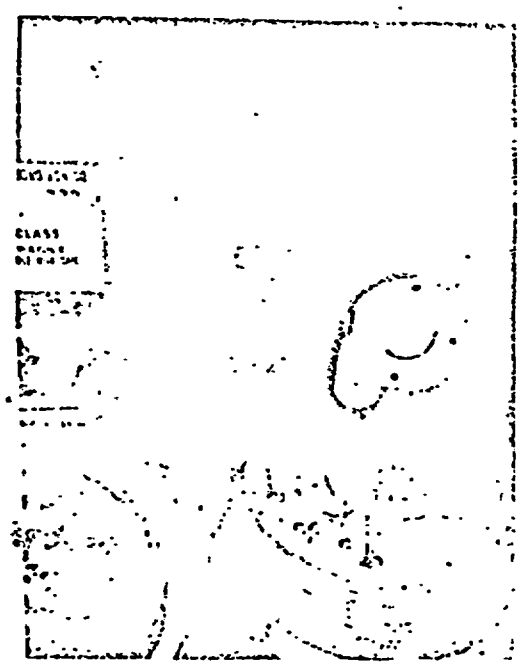

CONTAINER #16 - Bio-Nuclear
Neoprene gasket missing

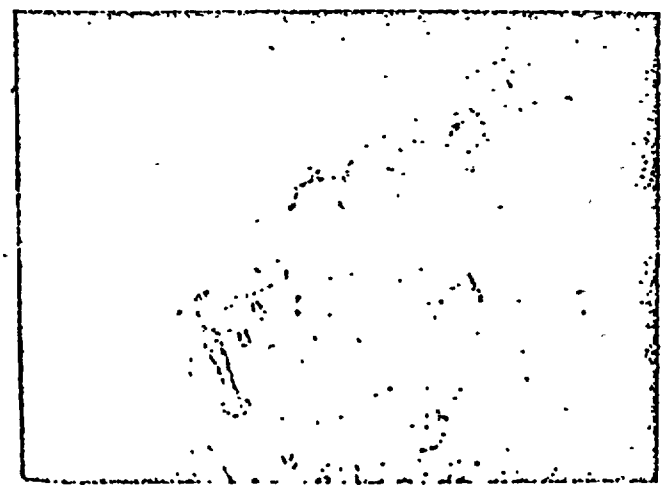

CONTAINER #40 - Bio-Nuclear
Section of neophrene gasket missing

ATTACHMENT A - 2

a.

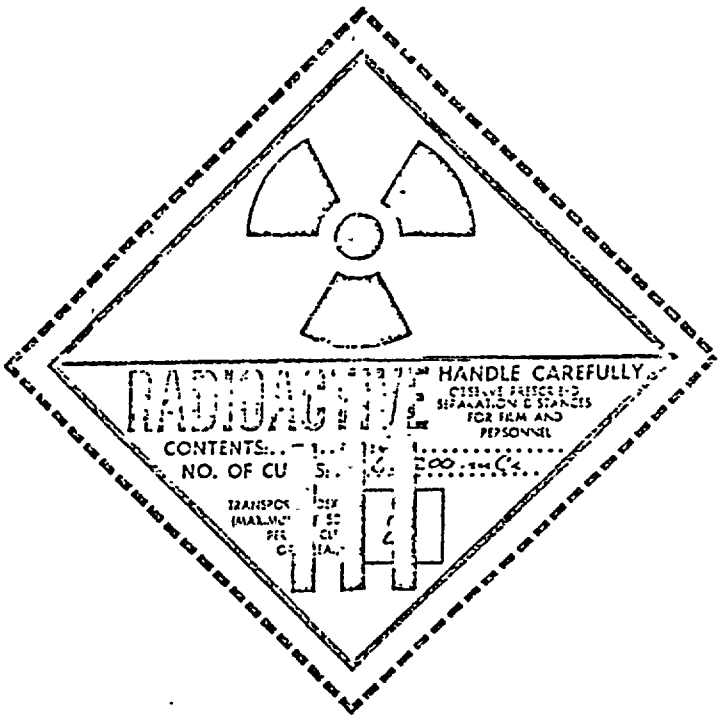

Package Label
RADIOACTIVE - YELLOW III

Bright yellow upper half
White lower half

b.

FROM
UNION CARBIDE CORPORATION
STERLING FOREST RESEARCH CENTER
P. O. BOX 324, TUXEDO, NEW YORK 10987

To:

BIO-NUCLEAR LABORATORIES

HOLD AT AIRPORT

HOUSTON, TEXAS

Address Label

RESUSPNABLE CONTAINERS ARE TO BE RETURNED TRANSPORTATION PREPAID TO UNION CARBIDE [illegible] WITHIN [illegible] DAYS OF RECEIPT. A CHARGE OF $10.00 PER WEEK WILL BE MADE FOR CONTAINERS HELD MORE THAN 7 DAYS

UNION CARBIDE

UNION CARBIDE CORPORATION
STERLING FOREST RESEARCH CENTER
P. O. BOX 324, TUXEDO, N. Y. 10987

ORDER - INVOICE
28856

INVOICE TO
Dismalene Laboratories
Box 2034
Houston, Texas 77027

SHIP TO (IF DIFFERENT FROM INVOICED TO)
Houston

CUSTOMER SALES ORDER NO			TERMS	DATE PRINTED
00321-5	1203	2	NET 30 DAYS	12/21/71
CUSTOMER PURCHASE ORDER NO				
7227	8-3720			22/12/71

BATCH NO	PRODUCT CODE	PRODUCT DESCRIPTION	QUANTITY SHIPPED	QUANTITY ORDERED & BILLED	UNIT PRICE	AMOUNT
M Mb	MO-99-P-3	Molybdenum-99	130,000 mCi	82,000 mCi		

CONCENTRATION 230 mCi/ml
VOLUME 567 ml in 2 bottles, 285 ml each
SPECIFIC ACTIVITY 1.0 mCi/mg
CHEMICAL FORM Na_2MoO_4 in 3N NaOH
STABILIZER —
CARRIER —

ISOTOPE SPECIFICATIONS 1800 HRS 12/21/71
CALIBRATION TIME

SPECIAL INSTRUCTIONS
Calibrate to 1800 Sunday
Ship in 2 bottles of equal quantity

PACKAGING AND SHIPPING INFORMATION

DESCRIPTION
☐ RADIOACTIVE MATERIALS
☐ RADIOACTIVE MATERIALS SPECIAL FORM
TRANSPORT GROUP NO.
ACTIVITY
LABEL
☐ [illegible]
☐ RADIOACTIVE YELLOW III
☐ NO LABEL REQUIRED

☐ THIS SHIPMENT [illegible] DEPARTMENT OF TRANSPORTATION AND TO THE [illegible] REGULATIONS

☐ THIS SHIPMENT [illegible] CARRY AS A PARCEL

SHIPMENT APPROVAL
RECEIVED BY
DATE

Cpm 24 hrs.
TRAFFIC: Notify customer of waybill info

Shipped in [illegible] Packages
SURVEY OF SHIPPING CONTAINER S]
[illegible] MR HR AT SURFACE
MAX PER [illegible]
TOTAL UNITS PER PACKAGE
[illegible] MR/HR AT ONE METER
☐ NO SIGNIFICANT REMOVABLE CONTAMINATION

GROSS WEIGHT
[illegible]
Transportation Index
Removable
Plus

5.1

UNIFORM AIRBILL

006 JFK 4327 4103

DL Flt. 925 Lv. 6:55 PM

☒ PREPAID ☐ COLLECT

DELTA AIR LINES, INC.
ATLANTA GEORGIA 30320

TO	VIA	TO	VIA	TO	VIA	TO	VIA
IAH	DL						

CONSIGNEE'S ACCOUNT NUMBER: CONSIGNEE

NAME: Biomuclear Laboratories

STREET ADDRESS: HOLD AT AIRPORT

CITY / STATE / ZIP CODE: Houston, Texas

SPECIAL INSTRUCTIONS INCLUDE YOUR OWN REFERENCE NUMBER: NOTIFY ON ARRIVAL TEL 713-717-1271

SHIPPER'S ACCOUNT NUMBER: SHIPPER

NAME: Union Carbide Corp. 531

STREET ADDRESS: PO Box 324, Tuxedo

CITY / STATE / ZIP CODE: Tuxedo, New York 10987

CARRIER USE ONLY

RATE	CHARGES
	WEIGHT CHARGES $
	PICK UP
	DELIVERY
	EXCESS VALUE
	ADVANCES
	OTHER
	SHIPPER'S C.O.D.
	C.O.D. FEE
	TAX
	TOTAL CHARGES $

LENGTH X WIDTH X DEPTH = CUBIC INCHES

DIMENSIONAL WGT-LBS

C. O. D. SHIPMENT
IF AMOUNT ENTERED HERE BY SHIPPER

OTHER CHARGES / DESCRIPTION OF OTHER CHARGES / G.B.L. NUMBER

NO. PCS	WEIGHT	DESCRIPTION OF PIECES AND CONTENTS PACKING, MARKS, NUMBER
2	866	Radioactive Material
		16 Units
		(DESTROYED AFTER'S NUMBER ATTACHED)

THIS IS NOT AN INVOICE

EXECUTED AT/BY: JFK Mujn

DATE: 12/31/71

TIME: 1410

006 JFK 4327 4103

ATTACHMENT A - 4

DEPARTMENT OF TRANSPORTATION
HAZARDOUS MATERIALS REGULATIONS BOARD
WASHINGTON, D.C. 20590

SPECIAL PERMIT NO. 5800

This special copy permit is issued pursuant to 46 CFR 146.05-4 of the U. S. Coast Guard (USCG) Dangerous Cargo Regulations and 49 CFR 170.13 of the Department of Transportation (DOT) Hazardous Materials Regulations, as amended.

1. The U. S. ATOMIC ENERGY COMMISSION (USAEC) and its contractors and licensees, the DEPARTMENT OF DEFENSE and its contractors, and licensees of "agreement states" as approved by the USAEC, are hereby authorized to ship Type B quantities of any non-fissile radioactive material in either normal or special form, as provided for herein.

2. Each user of this permit must register his identity with this Board prior to his first shipment under the permit.

3. The authorized packaging consists of an interim DOT Specification 20WC wooden protective jacket, as described in Appendix A hereto, when used with any single one of the following types of inner containment vessels which must fit snugly within the jacket:

a. A DOT SPECIFICATION 55 (or equivalent) metal-encased shielded inner containment vessel;

b. A DOT Specification 2R (or equivalent) metal inner containment vessel; or

c. A DOT Specification 7A inner packaging which has a metal outer wall (not authorized for normal form radioactive materials).

4. The packaging design is based upon the ambient conditions as prescribed in Marginal C-2.4.3 of the Regulations for the Safe Transport of Radioactive Materials, 1967 Edition, International Atomic Energy Regulation (IAEA).

5. The authorized package meets the criteria of the International Atomic Energy Agency for Type B packages [illegible]

6. Prior to each shipment authorized by this permit, the shipper shall notify the consignee and, if export shipments, the competent authority of any country into or through which the package will pass, of the dates of shipment and expected arrival. The shipper shall notify each consignee of any special loading/unloading instructions prior to his first shipment.

7. The outside of each package must be plainly and durably marked "USA DOT SP 5800" and "TYPE B", in connection with and in addition to the other markings and labels prescribed by the DOT regulations. Each shipping paper issued in connection with shipments made under this permit must [illegible] "USA DOT SPECIAL PERMIT NO. 5800", [illegible] with the description thereon.

J-86-59

8. Each package of gross weight in excess of 50 kilograms (110 pounds) must have its gross weight in kilograms plainly and durably marked on the outside of the package.

9. Shipments are authorized only by vessel, cargo-only aircraft, passenger-carrying aircraft, rail, and motor vehicle.

10. No special operational transport controls are necessary during carriage except as specified herein, and no special arrangements have been made under Marginal C-6.5 of the IAEA Regulations.

11. For shipments by water, the shipper or agent shall notify the USCG Captain of the Port in the port area through which the shipment is to be made, of the name of the vessel on which the shipment is to be made, and of the time, date, and place of loading. When the initial notification is given in a port area through which the shipment is to be made of the name of the vessel on which the shipment of the Port.

12. Any incident involving loss of contents must be promptly reported to this Board.

13. This permit does not relieve the shipper or carrier from compliance with any requirement of the DOT regulations, including 46 CFR Parts 146 to 149 of the USCG Regulations, except as specifically provided for herein, or the regulations of any foreign government, into or through which the package will be carried.

14. This permit expires January 15, 1971.

Issued at Washington, D.C., this 3rd day of January 1969.

/s/E. G. Grundy, Capt.
For the Commandant
U. S. Coast Guard

/s/S. Schneider
For the Administrator
Federal Aviation Administration

/s/D. W. Morrison
For W. R. Fiste
For the Administrator
Federal Highway Administration

/s/Austin H. Banks
For Mac E. Rogers
For the Administrator
Federal Railroad Administration

Address all inquiries to: Secretary, Hazardous Materials Regulations Board, U.S. Department of Transportation, Washington, D.C. 20590. Attention: Special Permits.

cc:
U. S. Coast Guard
Bureau of Explosives, AAR
Federal Highway Administration
Federal Railroad Administration
Federal Aviation Administration
Atomic Energy Control Board, Canada
U. S. Atomic Energy Commission, Mr. Kaye
Department of Defense, Mr. Edwin T. Loss

DEPARTMENT OF TRANSPORTATION
HAZARDOUS MATERIALS REGULATIONS BOARD
WASHINGTON, D.C. 20590

SPECIAL PERMIT NO. 5800
FIRST REVISION

Pursuant to 46 CFR 146.02-25 of the U. S. Coast Guard (USCG) Dangerous Cargo Regulations and 49 CFR 170.15 of the Department of Transportation (DOT) Hazardous Materials Regulations, as amended, and on the basis of the October 14, 1970, petition by the Idaho Nuclear Corporation, Idaho Falls, Idaho and the November 5, 1970, petition by Westinghouse Electric Company, Pittsburgh, Pa.:

Special Permit No. 5800 is hereby amended by revising paragraphs (1), (5), and (14) and by adding new subparagraphs (1a), (9a), and (11a), to read as follows:

"1. Shipments of Type B quantities (S 173.389 (L)) of any radioactive material, in normal or special form, are hereby authorized, as further provided for herein. This packaging, when constructed and assembled as prescribed herein, with the contents as authorized herein, meets the standards prescribed in the DOT regulations, Sections 173.394(b) (3), 173.395(b)(2), and 173.396(c)(3), and 173.398(c). The fissile radioactive material content of each package may not exceed those quantities and material types as limited and prescribed in subparagraphs (a)(2)(ii), (a)(2)(iii), and (b)(2) of S 10 CFR 71.6 of the USAEC Regulations, with such packages to be shipped as either Fissile Class II or III, in accordance with the package transport index limitations or shipment limitations prescribed therein.

"1a. Each shipper, under this permit, other than the petitioners named above, and the other previously identified petitioners, shall register his identity with this Board prior to his first shipment, and shall have a copy of this permit in his possession before making any shipment.

"5. The authorized package described herein is hereby certified as meeting the specific requirements of the International Atomic Energy Agency's (IAEA) "Regulations for the Safe Transport of Radioactive Material", Safety Series No. 6, 1967 edition, as follows:

a. Marginal C-6.2.2 - The package design meets the requirements for Type B packaging for radioactive materials.

b. Marginal [illegible] as limited by paragraph (1) meets the requirements for Fissile Class II or III shipments.

"9a. For shipments by air, a copy of this permit must be carried aboard any aircraft transporting radioactive materials under the terms of this permit. Fissile Class III shipments by cargo-only aircraft must conform to S173.396(g)(1). Fissile Class III shipments by passenger-carrying aircraft are not authorized.

"11a. For shipments by water, a copy of this permit must be carried aboard any vessel transporting radioactive materials under the terms of this permit.

"14. This permit expires January 15, 1973."

All other terms of this permit, as revised, remain unchanged. The complete permit currently in effec consists of the original issue and the First Revision.

Issued at Washington, D.C.:

/s/ R. G. Schwing, Capt. R. G. Schwing. Capt. For the Commandant U. S. Coast Guard	25 November, 1970 (DATE)
/s/ S. Schneider For the Administrator Federal Aviation Administration	18 DEC 1970 (DATE)
/s/ D. W. Morrison for W. R. Fiste For the Administrator Federal Highway Administration	2 December 1970 (DATE)
/s/ Quentin H. Banks for Mac E. Rogers For the Administrator Federal Railroad Administration	9 December 197 (DATE)

Address all inquiries to: Secretary, Hazardous Materials Regulations Board, U.S. Department Transportation, Washington, D.C. 20590. Attention: Special Permits.

Dist: a, b, c, d, e, h, i
Keleket/CGR Corporation, Waltham, Mass..
Rutgers University, New Brunswich, N.J.
Department of the Army, Washington, D.C.
General Electric Co., Pleasanton, Calif.
The Ohmart Corporation, Cincinnati, Ohio

Union Carbide Corporation, Tuxedo, New York
Radiation Products Division, Burlington, Mass.
Naval Research Laboratory, Washington, D. C.
J. L. Shepherd & Associates, Glendale, Calif.
Siemens Medical of America, Inc., Union, N.J.
Nuclear Engineering Co., Inc., Morehead, Ky.
Battelle Memorial Institute, Columbus, Ohio
Todd Shipyards Corporation, Galveston, Texas
Materials Evaluation Group, Phoenixville, Pa.
General Electric Co., St. Petersburg, Florida
Westinghouse Electric Corporation, Cheverly, Md.
Westinghouse Electric Corporation, Pittsburgh, Pa.
Cumberland Research Corporation, Port Norris, N.J.
Industrial Reactor Laboratories, Inc., Plainsboro, N.J.
Newport News Shipbuilding & Dry Dock Co., Newport News, Va.

January 1, 1969

Interim DOT Specification 20WC

§ 178.194 Specification 20 WC wooden protective jacket

§ 178.194-1 General Requirements

(a) Each jacket must meet the applicable requirements of § 173.24 of this chapter.

(b) Maximum gross weight of the jacket plus the contents may not exceed the following:

(1) Spec. 20WC-1: 500 pounds

(2) Spec. 20WC-2: 500 pounds

(3) Spec. 20WC-3: 1000 pounds

(4) Spec 20WC-4: 2000 pounds

(5) Spec 20WC-5: 4000 pounds

§ 178.194-2 Materials of construction

(a) The general configuration of the wooden protective jacket is a hollow cylindrical shell constucted of one-piece discs and rings of plywood or solid hardwood reinforced with steel rods.

(b) Plywood must be exterior-grade, void-free, douglas fir (or equivalent) not more than one inch thick. Solid hardwood is authorized for Spec. 20WC-2 only.

(c) Discs and rings must be glued together with a strong, shock-resistant adhesive, such as either of the following:

(1) A resorcinol-formaldehyde adhesive, which has been bonded under heat *and* pressure: or

(2) A polyvinyl-acetate emulsion, which has been reinforced with cementcoated nails. The nails must be randomly spaced and must be at least 2-1/2 times as long as the minimum thickness of the plywood discs or rings.

(d) Full-length steel rods are required for reinforcement and lid closure. For Specs. 20WC-1 and 20WC-2, a minimum of six rods at least 0.25 inches in diameter are required. For Spec. 20WC-3, a minimum of 12 rods, at least 0.375 inches in diameter are required. For Spec. 20WC-4, a minimum of 16 rods at least 0.375 inches in diameter are required, and for Spec. 20WC-5, a minimum of 16 rods at least 0.5 inches in diameter are required. For Specs. 20WC-1 and 20WC-2, steel rods must be equally

spaced around the circumference of the rings and discs, midway between the O.D. and I.D. of the rings. For Specs. 20WC-3 and 20WC-4, bolts may be staggered alternately in two rows, at ±0.5 inches from the line midway between the O.D. and I.D. of the rings. For Spec. 20WC-5, bolts may be staggered alternately in two rows at ± one inch from the line midway between the O.D. and I.D. of the rings. Rod ends must be threaded and secured with lock nuts and steel washers, or equivalent device, to provide at least a one inch diameter bearing surface on each end. Ends of the rods must terminate 0.75 inches below the surface of the plywood for Specs. 20WC-1 and 20WC-2. For Specs. 20WC-3, 20WC-4, and 20WC-5, the ends of the rods must terminate 1.5 inches below the surface of the plywood, and that portion of each end disc which extends beyond the rod ends must be further held in place with lag screws at least four inches long.

(e) Thickness of wooden shell:

(1) Spec. 20WC-1: At least four inches thick.

(2) Spec. 20WC-2: At least three inches thick. The jacket must be completely encased by a steel shell at least 18-gauge thickness, such as a Spec. 17H steel drum. The steel shell must be vented by at least four 0.25 inch diameter holes, which must be covered with a durable weatherproof tape.

(3) Spec. 20WC-3: At least five inches thick for the jacket wall, and at least six inches thick for the end discs. In addition, at least three plywood chines, two inches wide and protruding two inches beyond the outer surfaces, must be located at each end and midway along the length of the jacket.

(4) Spec. 20WC-4: At least six inches thick for the jacket wall, and at least six inches thick for the end discs. In addition, at least three plywood chines, two inches wide and protruding two inches beyond the outer surfaces, must be located at each end and midway along the length of the jacket.

(5) Spec. 20WC-5: At least six inches thick for the jacket wall, and at least eight inches thick for the end discs. In addition, at least five plywood chines, two inches wide and protruding two inches beyond the outer surfaces, must be located at each end and equally spaced along the length of the jacket.

(f) Figures 1 and 2 illustrate representative designs.

§ 178.194-3 Closure

(a) Closure for the wooden protective jacket is provided by the steel reinforcing rods. The end cap (lid) must fit tightly to the body of the jacket to prevent a heat path to the inside of the jacket. The lid joint for Specs. 20WC-3, 20WC-4, and 20WC-5 may not be co-planar with the end of the inner containment vessel.

(b) Spec. 20WC-2. Locking ring closure, if used, must conform to § 178.104-4. Flanged closure, if used, must have at least eight steel bolts (at least 0.25 inch diameter) and lock nuts (or equivalent device), spaced not more than five inches between centers.

§ 178.194-4 Tests

(a) Each jacket must be visually inspected for defects such as improper bonding, cracking, corrosion of steel rods, an improperly fitting closure lid, or other manufacturing defects. Particular attention must be given to any separation of the plywood discs and rings which would provide a heat path to the inside of the jacket.

§ 178.194-5 Painting

(a) Each jacket must be completely painted with a high quality exterior weather resistant paint.

§ 178.194-6 Marking

(a) Each jacket must be marked on the external surface as follows: "USA DOT 20WC-( ) TYPE B" and "RADIOACTIVE MATERIAL". The appropriate numeral must be inserted in the marking to indicate the appropriate Spec. 20WC category; e.g., "USA DOT 20WC-2".

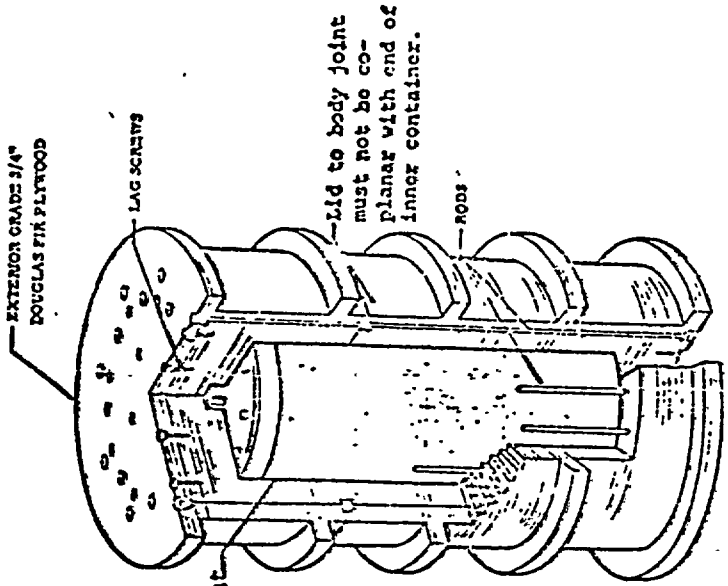

Figure 2. Spec 20WC-5

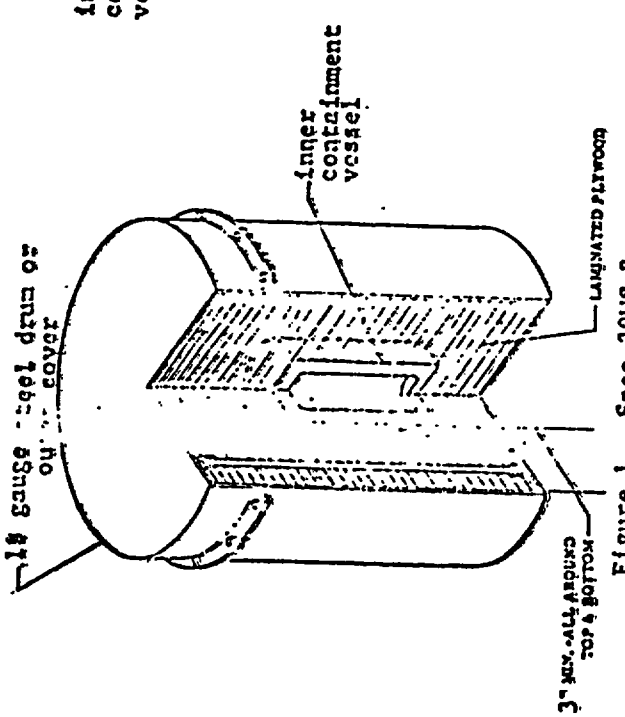

Figure 1. Spec 20WC-2

FLIGHT RECORD

LM AND CX

MSY CODE

TPA CODE

DATE 7/1/21

NO. 906

TRANSMIT INFORMATION IN THE UNSHADED BLOCKS ONLY

				CARGO [illegible] BOARD	BIN 1	BIN 2	BIN 3	BIN 4	BIN 5	BIN 6	BAGS		MAIL		EXPRE			
ON																		
OUT		34		2554	2392		162				38	893	40	640	4	4		
ON																		
OUT	2	26	1-0	1745		1646		99			53	1246	18	360				
ON																		
OUT	2	50	1-0	4279	2392	1646	162	99			91	2139	55	1000	4	4?	31	1111
ON																		
OUT																		

1 MSY BGS. M-X-FLT

2 IAH Bgs - M - FLT

3 MSY FLT 4/162 R/A - MSY

4 IAH FLT 3/99 R/A - IAH

1 DOG + 1 CAT - IAH BIN 2 1 DOG AS BAG - MSY BIN 1

RAMP

J-86-69

ATTACHMENT A-5

Station: TFK

FLT: Date: 12/31/71

Agent:

DELTA AIR LINES FREIGHT

Page 15 of ____ Pages

OMHH 3762

ORIG PCS	ORIG WT	AIRBILL OR SHIPPING TICKET NUMBER	DEST PCS	DEST WT	AIRBILL OR SHIPPING TICKET NUMBER	DEST PCS	DEST WT	AIRBILL OR SHIPPING TICKET NUMBER
1	38	TFK 4327 4136		9	R.A. UNITS			
2	66	TFK 4327 4145T		16	R.A. UNITS			
2	40	VM 2505 0256						
						13	405	TFK 2505 0256
						2	56	TFK 4327 [illegible]
						6	321	VM 4457 6155
5	139					21	786	TOTAL

TOTAL

FORM 0412 ROUTE
NOTICE 2-70

RESTRICTED ARTICLES/ARMED GOVERNMENT OFFICIALS NOTICE

DELTA AIR LINES

TO CAPTAIN 9[illegible], 31
FLIGHT DATE

FROM: LOAD PLANNER L. Cummings (SIGNATURE) CITY TPA

THE FOLLOWING ACCEPTABLE RESTRICTED ARTICLES ARE ON BOARD:

CLASSIFICATION: NON ACTIVE MATERIAL AMOUNT 24 UNITS BIN [illegible] DEST. IAH

CLASSIFICATION: NON ACTIVE MATERIAL AMOUNT 10 UNITS BIN [illegible] DEST MSY

THE FOLLOWING GOVERNMENT OFFICIALS ARE ON BOARD AND HAVE BEEN CLEARED TO CARRY CONCEALED WEAPONS:

NAME _____ GOVT. AGENCY _____ DEST _____

NAME _____ GOVT. AGENCY _____ DEST. _____

Prepare In Duplicate
1. Captain
2. Station File (For Two Years)

J-86-71

ATTACHMENT A - 5 - 3

Form 0412 K0166
NOTICE 7-70

RESTRICTED ARTICLES/ARMED GOVERNMENT OFFICIALS NOTICE

DELTA

TO: CAPTAIN 425 / 31
FLIGHT DATE

FROM LOAD PLANNER L. CUMMINGS (SIGNATURE) CITY TPA

THE FOLLOWING ACCEPTABLE RESTRICTED ARTICLES ARE ON BOARD:

CLASSIFICATION: RADIO ACTIVE MATERIAL AMOUNT 15 UNITS BIN 4 DEST. PHX

CLASSIFICATION RADIO ACTIVE MATERIAL AMOUNT 33 UNITS BIN 3 DEST. IAH

THE FOLLOWING GOVERNMENT OFFICIALS ARE ON BOARD AND HAVE BEEN CLEARED TO CARRY CONCEALED WEAPONS:

NAME _____ GOVT. AGENCY _____ DEST. _____

NAME _____ GOVT. AGENCY _____ DEST. _____

Prepare in Duplicate
1. Captain
2. Station File (For Two Years)

ATTACHMENT A-6

DELTA AIR LINES

FLIGHT RECORD

LM AND CR

TRANSMIT INFORMATION IN THE UNSHADED BLOCKS ONLY

MSY . OCLL

735 121

901

					BIN 1	BIN 2	BIN 3	BIN 4	BIN 5	BIN 6	BAGS		MAIL		EXPRESS		FREIGHT		COVAT		FIRST CLASS MAIL	
1	30			54	2511	956		487			43	1011	8	175			26	587	30	1500	12	351
	17	V-L		10	682	36	1892				29	682	12	214			15	1552			5	132
1	49	V-1		64	3193	992	1592	487			72	1693	20	389			41	2469	30	1500	17	483

1 MSY BAKER C. C. 13 BALE NET 1111 BCC

2 MSY MOA FLT 1AH DOS 1/26 MOA FLT

3 1AH FLT 10-12

4 MSY FLT

5 FROM R/11 MSY DOW 4 6/135 R/11 1111 [illegible]

NAME

ATTACHMENT A - 7 - 2

FREIGHT AND COMAT MANIFEST

Station JFK

FLT _____ Date 12/31

Crew _____

Cart 17

FREIGHT

PCS	WT	AIRBILL OR SHIPPING TICKET NUMBER	PCS	WT	AIRBILL OR SHIPPING TICKET NUMBER	PCS	WT	AIRBILL OR SHIPPING TICKET NUMBER
2	260	JFK 4323 4113			RA units 17			
4	515	JFK 4323 4114			RA units 17			
					63			
					15			
					48			
					BIN 3			
6	1375		/			/		TOTAL /

COMAT

/			/			/		/

FREIGHT AND COMAT MANIFEST

ATTACHMENT A - 7

Station JFK

FLT _____ Date 13/3/21

Agent _____

Page _____ of _____ Pages

FREIGHT

USY PCS	USY WT	AIRBILL OR SHIPPING TICKET NUMBER	LAST PCS	LAST WT	AIRBILL OR SHIPPING TICKET NUMBER	EAH PCS	EAH WT	AIRBILL OR SHIPPING TICKET NUMBER
6	220	JFK-1127-911			15 R.A. UNITS			
1	38	JFK-3245-964			C.A.G.P.T.			
1	2	NCR/E574 5555						
2	41	JFK-4423 5363						
11	78	JFK-4423 5323			DAC			
						264	JFK-3097	
					SJD	325	NCR/1107-[illegible]	
			LIVE	DOG	ELP	1	38	CIS/E225 [illegible]
						4	62	JFK-4423 5[illegible]
21/487			1			9/307		TOTAL 11/

COMAT

								TOTAL
/			/			/		/

FREIGHT AND COMAT MANIFEST

ATTACHMENT A-7

Station JFK

Flt. _____ Date 12/21/01

Agent _____

DELTA AIR LINES FREIGHT

Page _____ of _____ Pages

TOTAL PCS	TOTAL WT	AIRBILL OR SHIPPING TICKET NUMBER	LESS PCS	LESS WT	AIRBILL OR SHIPPING TICKET NUMBER	TOTAL PCS	TOTAL WT	AIRBILL OR SHIPPING TICKET NUMBER
6	228	JFK 4327 2311		15	R.A. UNITS			
1	38	JFK 3295 4641			C.A.G.P.T.			
1	2	ACR/5574 5503						
8	41	JFK-4323 5506						
11	78	JFK-4323 5523		DAL				
						2	64	JFK-5047 [illegible]
					SJD	2	25	ACR/4407 [illegible]
				LIVE DOG	ELP	1	34	ACR/5225 [illegible]
						4	62	JFK 4423 5521
21	487		1			9	207	TOTAL

COMAT

								TOTAL
1			1			1		1

Bins

Bins

Bins

```
 V
ATLDCDL HSYCCDL IAMDCDL
.JFKCCDL
GX
S29/31 901 FC3CCO/ORIC-1900/AGCC3/C3/B1
1-49-1-1/G9G4/1-30/3954/LENINC/NIXON


ØV
CHCCCDL HSYCCDL
.JFKCCDL
LN
S29/31 901
HSY/P1 Y30/L3954 1-2511 2-956 4-407 D43 HC/175 FR26/C37 C30/1500
A13/381
IAH Y19 HR1-1 L2610 1-CC2 2-36 3-1002 B29 H12/214 FR15/1502 AS/152
YOY V1 Y09 HR1-1 LG G4 1-3193 2-992 3-1002 4-407 D72 H20/300 FR-11/2469
G0/1500 A17/513
DIMLX
1- HSY DOS C C IS BALLAST  IAH DOS
2- HSY H A FR IAH DOS  1/36 AS PRT
3- IAH FR H A
4- HSY FR
G/228 R/A HSY DIN FOUR  G/1579 R/A IAH DIN THREE 33 UNITS


ØV
SABXHDL HYCRADL
.JFKCCDL
PFS
S29/31DEC JFK
HSY 1/30
IAH C/19
$


 ØV
SABXHDL
.JFKCCDL
PS
C325/31DEC 901 90 A JFK 1900 21 C05
E 01 01 24 CC2 F C49 C49 072
$
```

CONVAIR 880
MAINTENANCE MANUAL

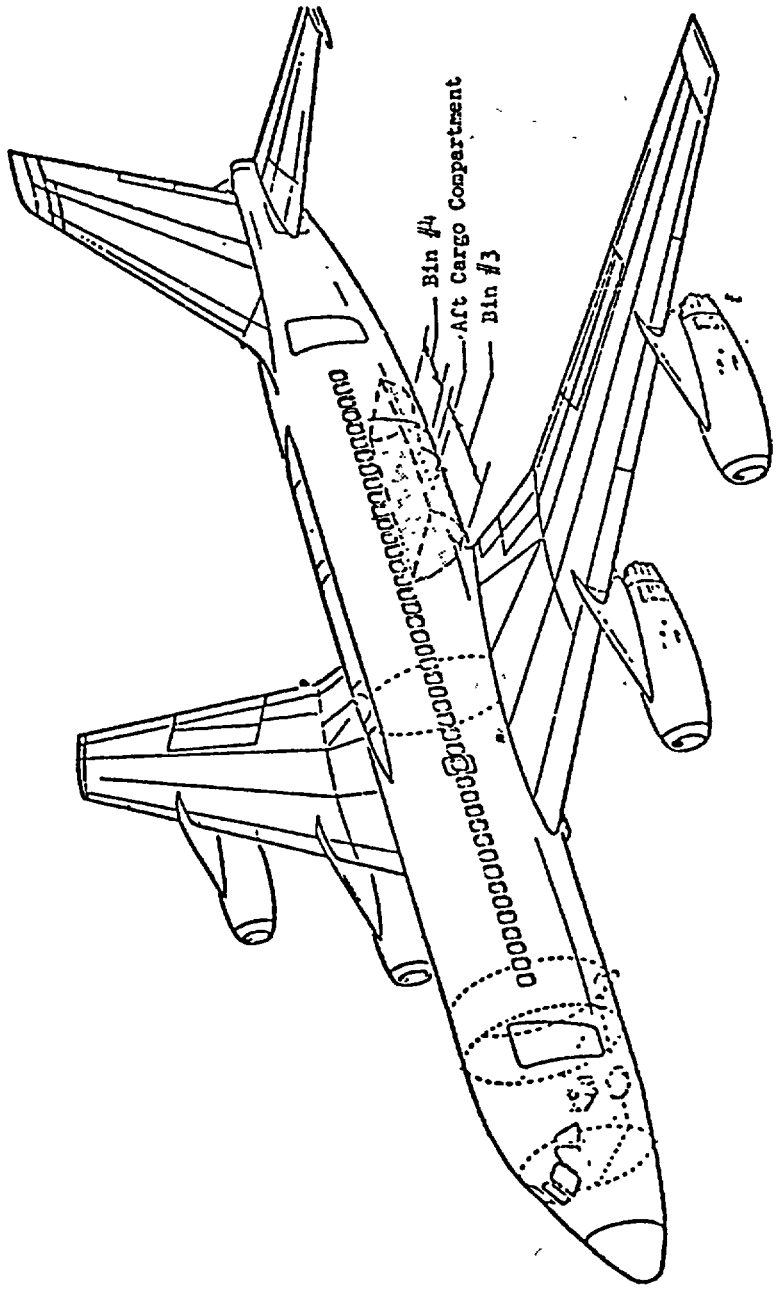

CONVAIR 880

STRUCTURAL REPAIR MANUAL

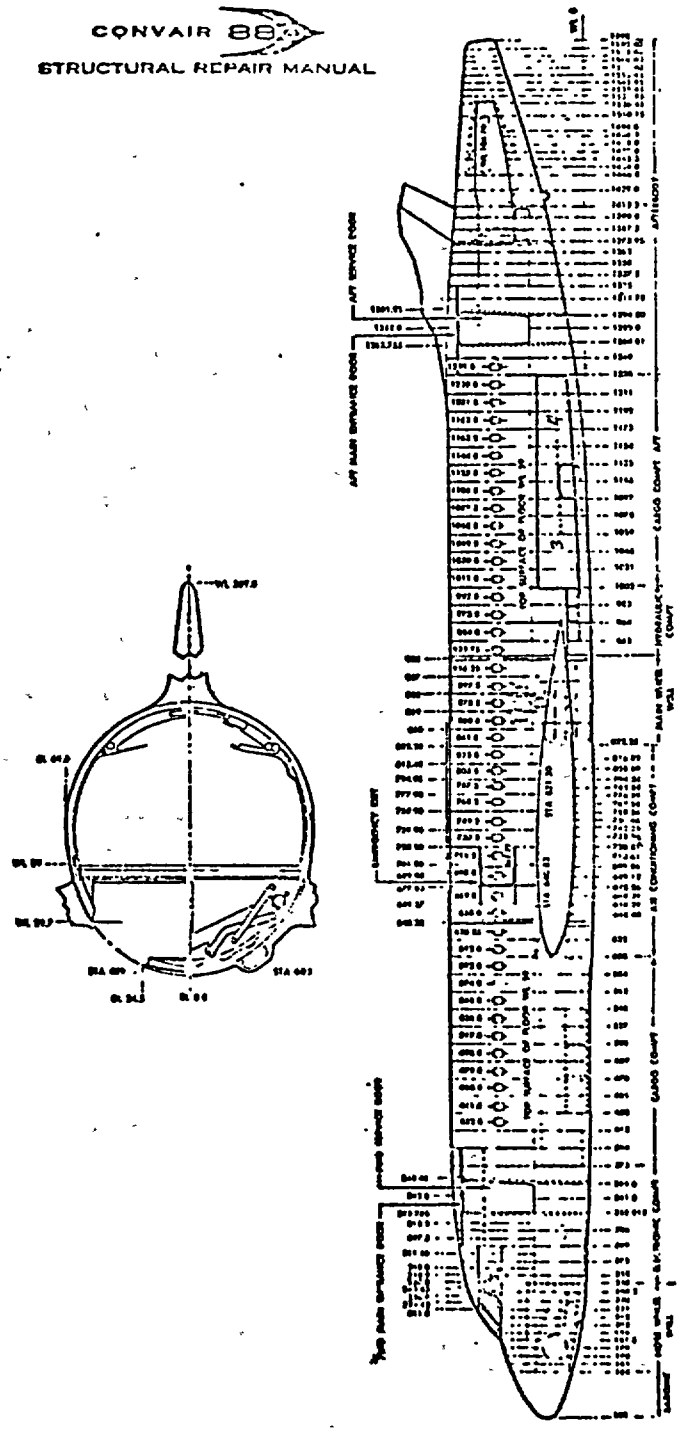

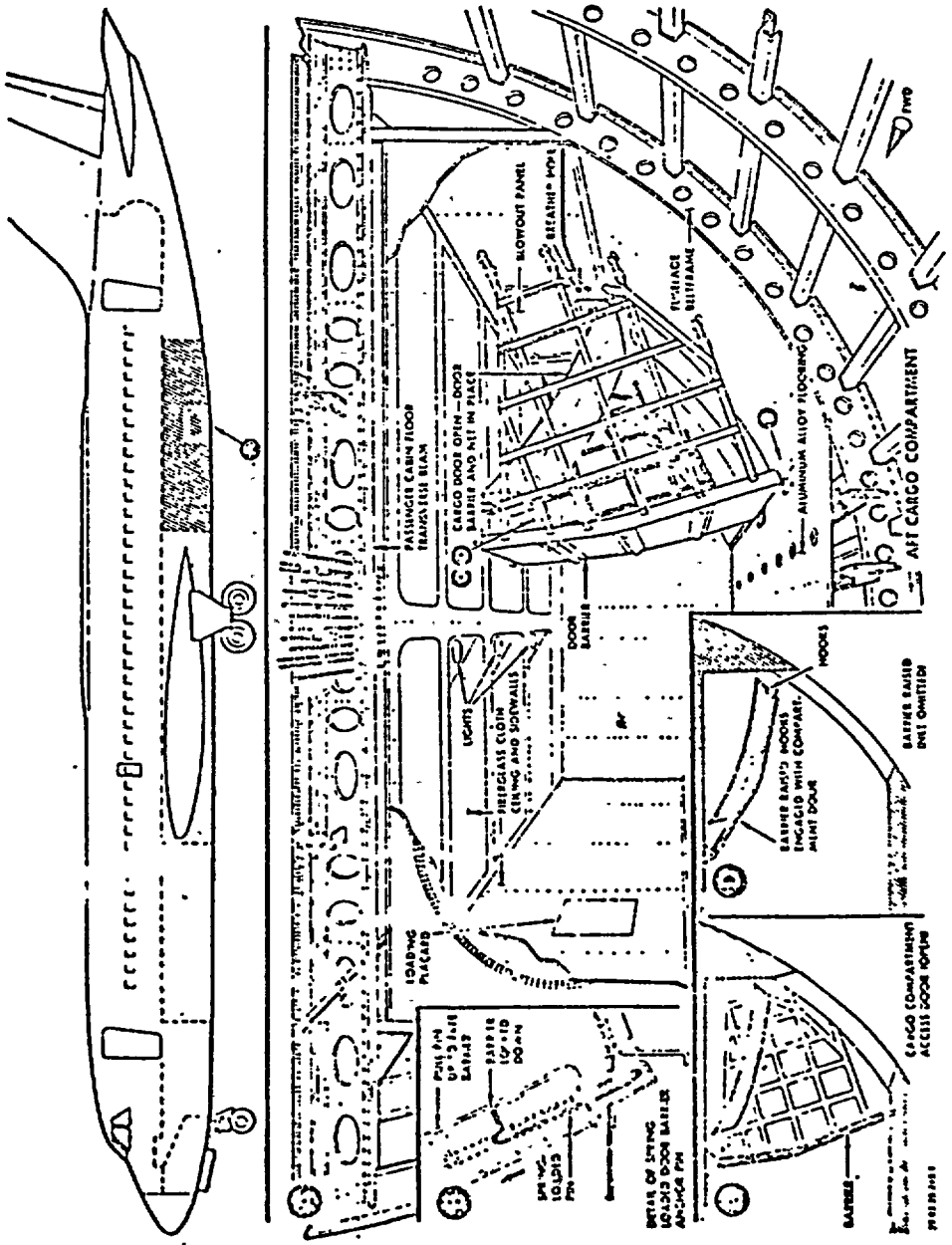

Cargo Compartments, Typical

DELTA AIR LINES, INC.

STANDARD PRACTICE

CONVEYORS

International Scout Conveyor - Model TC-476

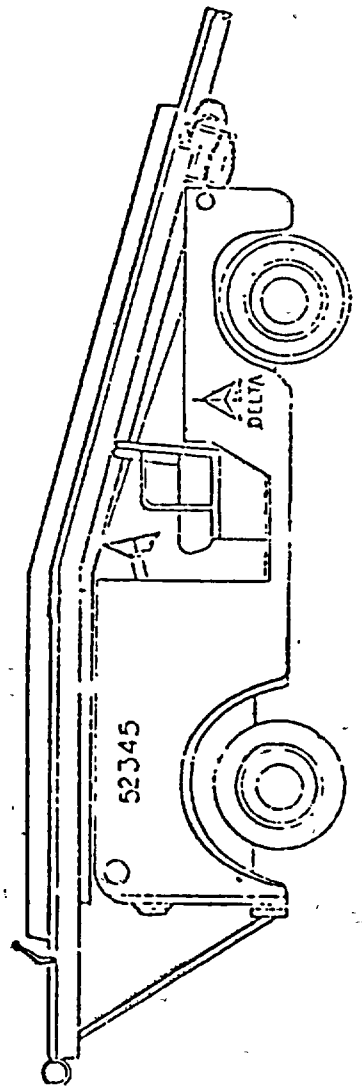

DELTA AIR LINES, INC.

STANDARD PRACTICE

Wollard Baggage Cart - Model BC-450

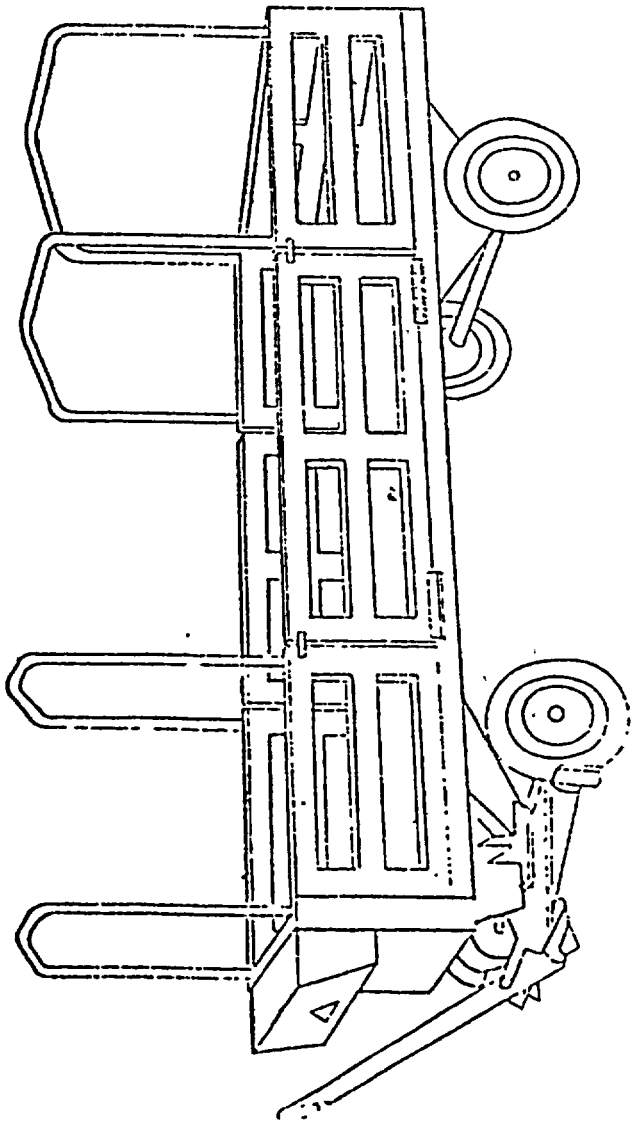

RECONSTRUCTION OF SEQUENCE OF INCIDENT NOTIFICATIONS

REF.	DAY/DATE	TIME	CALLER	CALL RECEIVED BY	INFORMATION EXCHANGED
C	SAT./JAN.1	0800-0900			Hastings Radiochemical picked up shipment from airport. On return driver detected contamination during routine processing.
C	SAT./JAN.1	1330	Hastings	Hastings' Consultant HP-Radiation Safety Officer (RSO)	Advised him of probable contamination. (He came in, surveyed packages, and confirmed contamination.)
C	SAT./JAN.1	1430	Hastings-RSO	Texas State Health Dept.	Advised of external contamination
C	SAT./JAN.1	1445	Hastings-RSO	American Biomedical Corp Dallas (Bio-Nuclear parent company)	Advised of contamination and alerted to possibility of BioNuclear shipment contamination.
C	SAT./JAN.1	afternoon	American Biomedical	BioNuclear	Advised of Hastings receipt of contaminated shipment in same consignment as theirs.
C	SAT./JAN.1	1500-1600	Hastings (Made UNSUCCESSFUL attempt to call)	Union Carbide Corp.	Apparently call got through to UCC boiler room. Caller would not identify problem or relay any information.
B	SUN./JAN.2	0700-0800			BioNuclear driver went directly to airport to pick up shipment. (Neither driver nor Delta knew of contamination at this time.) BioNuclear subsequently verified contamination and transfered remaining contents from containers.
A	SUN./JAN.2	morning			Texas State Health Dept. official traveled from Austin to Houston, visited Hastings, and confirmed contamination on packages.
B	SUN./JAN.2	morning	BioNuclear	Delta Air Lines (Freight)	Advised of findings of contamination, to check employees who handled shipment, and how to wash off contamination. (BioNuclear moved containers to quarantine in warehouse.)

*REF. - A - Time reference stated by individual company or agency representative.

B - Time reference approximated by company or agency representative.

C - Time reference approximated and reported by another party.

REF.	DAY/DATE	TIME	CALLER	CALL RECEIVED BY	INFORMATION RECEIVED
C	SUN./JAN.2	morning	Delta	Aviation Dept. Airport Security and Fire Dept.	Requested evaluation of condition at Airport Freight Facilities. (Fire Dept. decontaminated.)
A	SUN./JAN.2	1330	Hastings and Texas State Health Dept.	Union Carbide Corp.	To advise of contamination. UCC requested they call BioNuclear
A	SUN./JAN.2	1400	BioNuclear	Union Carbide	To advise package received contaminated.
	SUN./JAN.2	afternoon	BioNuclear	Texas State Dept.	To advise of contamination. (Representative, already at Houston, arrived soon after at BioNuclear.)
A	SUN./JAN.2		Texas State Health Dept. (called from BioNuclear)	Houston City Health Dept.	To advise of contamination. (Both proceeded to airport for survey which revealed additional areas of contamination.)
A	SUN./JAN.2	1500	Delta-Atlanta	Delta-Chicago	To advise of possible aircraft contamination. Requested AEC and Illinois Board of Health be contacted to inspect aircraft which was due to arrive at 1530. (AEC surveyed aircraft and found it contaminated. Aircraft was taken out of service and ferried to Atlanta for decontamination.)
B	SUN./JAN.2	2330	Delta-Atlanta	Union Carbide	Requested UCC call Delta VP to answer questions.
B	MON./JAN.3	0015	Union Carbide	Delta-Atlanta	In response to 2330 request.
B	MON./JAN.3	0400	Union Carbide	Delta, FAA & Georgia State Health Dept. (confer. call)	To determine course of action to pursue.
B	MON./JAN.3	0400	Union Carbide	BioNuclear (at home)	To learn details regarding package as received.
B	MON./JAN.3	0810	Union Carbide	N.Y. State Dept. of Health Dept. of Transportation Atomic Energy Comm., Regn.I Compliance	To advise known details of incident to date.
B	MON./JAN.3	0900	Union Carbide	Another Houston Consignee	To assure his packages were not contaminated. They had been routinely checked and found to be clean.

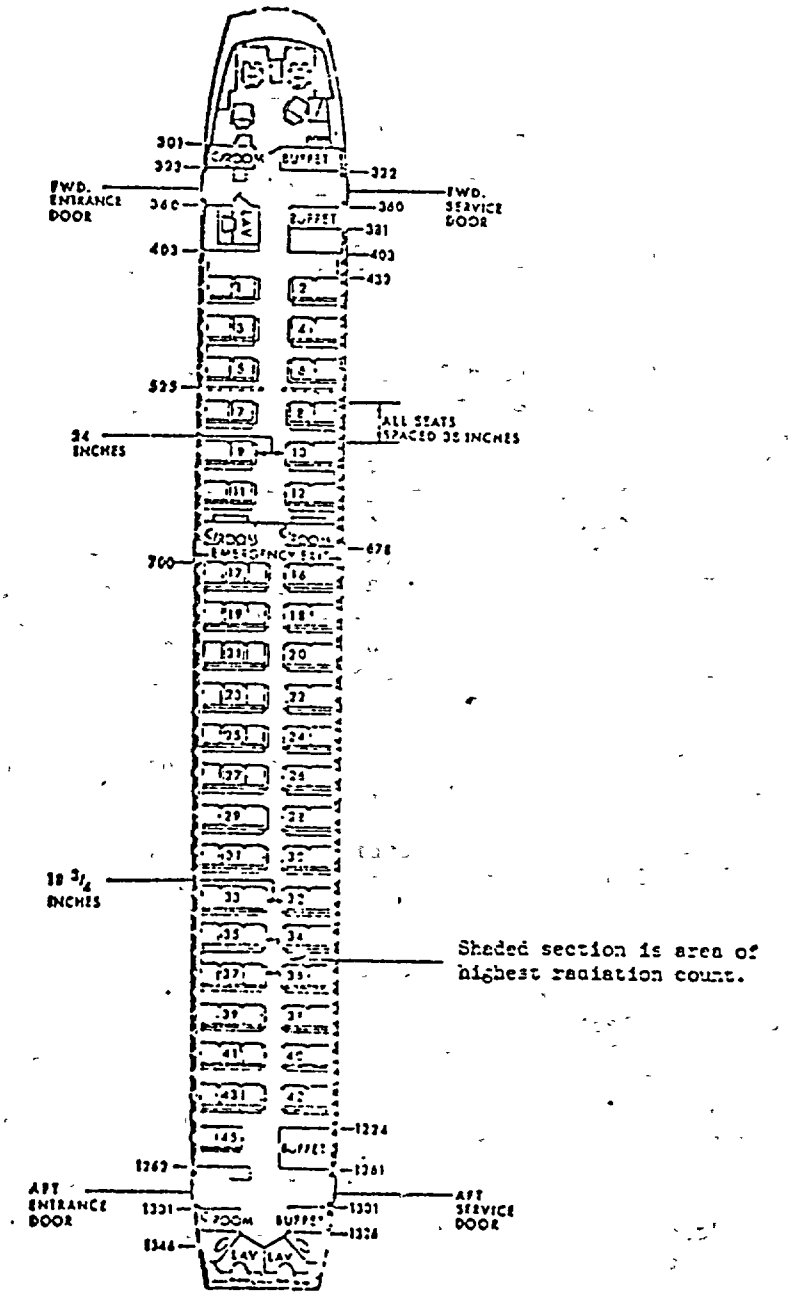

GENERAL ARRANGEMENT-PASSENGER AREA
(96 PASSENGER CONFIGURATION)

CONVAIR 880
MAINTENANCE MANUAL

CONVAIR 880

MAINTENANCE MANUAL

AIR DISTRIBUTION SYSTEM - DESCRIPTION AND OPERATION

1. General.

The air distribution system delivers conditioned air from the air conditioning packages to the crew and passenger compartments. A schematic of the air flow is shown on Figure 1. The air distribution system is illustrated on Figure 2. Aluminum and fiberglass ducting is used to deliver the conditioned air to air inlets along the sides of the cabin just below the hat-racks. The location and design of the inlets permit an even distribution of conditioned air throughout the passenger compartment with no drafts at any passenger location. The ducts and inlet vents minimize sound generation by the conditioned air as it moves through the ducts and out of the vents. Additional adjustable air inlets (ventilators) are installed above each passengers seat next to the reading light on lower surface of the hat racks. Conditioned air for the flight compartment is delivered by aluminum and fiberglas ducting and discharged above the flight crew's heads and at their leg level. Adjustable ventilators are installed above and forward of each crew seat (except observer).

Conditioned air in the passenger cabin is exhausted from the cabin through exit vents installed outboard and below the seats. These vents direct the exhaust air into the area below the floor. The flight compartment air is also exhausted to the area below the floor. The air exhausted below the floor in the forward area of the cabin is directed through the electronics compartment for cooling and ventilation of the electronics equipment and then through the electrical compartment and overboard through the forward cabin pressure regulator and out-flow valve, or the electronic equipment cooling valve. The air exhausted below the floor in the aft area of the cabin is directed aft, around and below the baggage compartments to stabilize temperatures in the baggage compartments, and then further aft to the aft pressure regulator and outflow valve where the air is ported overboard.

To prevent odors from entering the passenger areas, all lavatories and buffets are ventilated by a one-way ventilation system. The conditioned air directed to these areas is vented directly overboard through tubing, a venturi to limit flow, and overboard vents.

CONVAIR 880

MAINTENANCE MANUAL

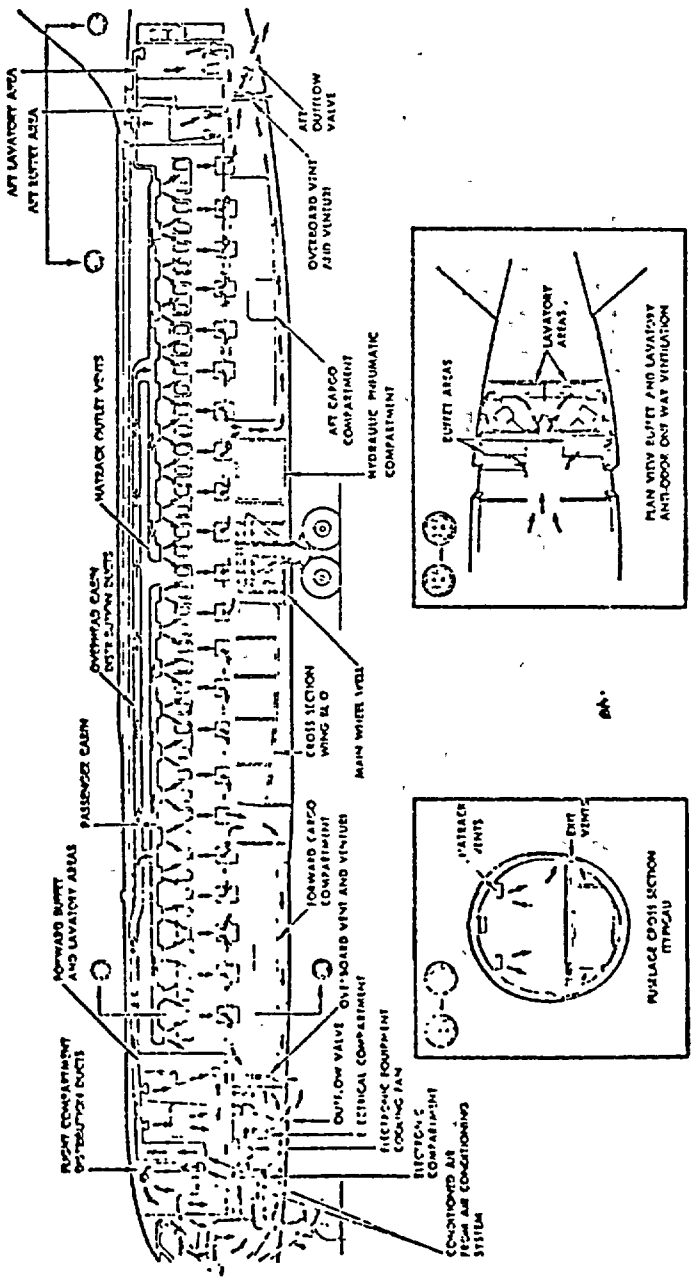

Air Flow and Pressurization Schematic

82

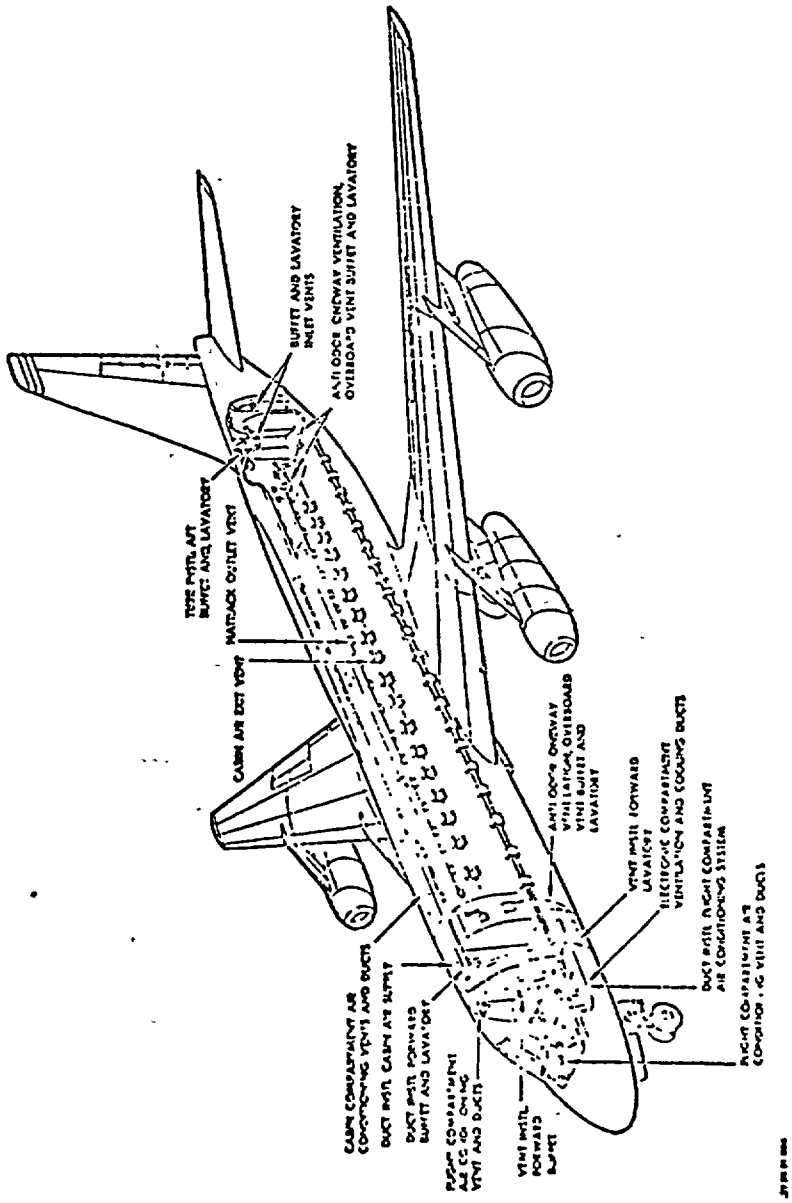

Air Distribution System

INSTRUCTIONS FOR OPERATION OF THE AIRPORT SURVEY POINTS

THE ACTIONS OF THE SURVEY POINT TEAM ARE TO ASSIST DELTA AIR LINES (DAL) AND SHOULD BE AIMED AT ASSURING THE PASSENGERS OF THE AGENCY CONCERN FOR THE PASSENGER. JUDGEMENT MUST BE EXERCISED SO AS NOT TO UNDULY EXCITE THESE INDIVIDUALS. IT SHOULD BE BORNE IN MIND THAT THESE INDIVIDUALS ARE NOT INFORMED ON RADIATION CONTROL. CONSEQUENTLY, INSTRUMENT RESPONSE ON VERY SENSITIVE SCALES MAY CAUSE UNNECESSARY CONCERN IF OBSERVED BY THE INDIVIDUAL. ALSO, THE TEAM MEMBERS SHOULD BE AWARE THAT THEIR REMARKS AND CONVERSATIONS AS HEARD BY THE PASSENGERS ARE SUBJECT TO PASSENGER INTERPRETATION. REMARKS MADE IN JEST AND USE OF WORDS SUCH AS "HOT" OR EXPRESSIONS DENOTING SURPRISE OR UNDUE CONCERN BY TEAM MEMBERS MUST BE AVOIDED.

A DAL REPRESENTATIVE WILL BE THE PUBLIC CONTACT POINT FOR THE SURVEYS PERFORMED BOTH AT THE AIRPORT AND AT HOMES. IT SHOULD BE REMEMBERED THAT SURVEY TEAMS ARE SERVING IN AN ADVISORY CAPACITY TO DAL. ANY RECOMMENDATIONS TO PASSENGERS SHOULD BE MADE BY DAL. DAL WILL PROVIDE TRANSPORTATION OF TEAM REPRESENTATIVES TO HOMES FOR HOME SURVEYS.

1. Points are to be manned from 10:00 AM to 10:00 PM by qualified individuals daily beginning January 6, 1972, for 5 days or until no further requests are received and the survey point is shut down by the Delta Station Manager. The number of individuals making up this Survey Point Team should take into consideration, that Home Survey Teams may be drawn from the Survey Point Team.

2. Delta Air Lines Station Managers will provide space and will assure that passengers are directed to the survey point.

3. The area used for survey should have the floor covered with protective paper or plastic sheeting as a precaution.

4. Instruments, with appropriate check sources, capable of measuring from one mr/hr to 500 mr/hr, beta-gamma, are to be available.

5. Decontamination supplies consisting of absorbent pads, paper towels, rubber gloves, detergent solution, plastic bags, tags, marking pencils, and radiation tags are to be available.

6. A record, with copy to the Division of Compliance, AEC, will be made of the survey of each individual and article on the form attached.

7. Instrument surveys should be made of all articles returned by passengers on the affected flights. If articles are contaminated the passenger also should be surveyed.

8. The action point is a contact reading of 2 mr/hr, beta-gamma.

a. If no reading is detected above 2 mr/hr, the passenger is informed that there is no significant contamination and he is allowed to depart.

b. If a reading is detected in excess of 2 mr/hr, the team will:

(1) Attempt to decontaminate without destruction or damage to the item.

(2) If decontamination is successful to 2 mr/hr, the passenger will be so informed. He will be advised that some contamination was detected and removed and an offer will be made to have his home surveyed. Judgment *must* be exercised in the expression of this offer based on the level and extent of contamination found.

(3) If decontamination to 2 mr/hr is *not* successful, the passenger will be informed that contamination was found which was not easily removed and that fixed contamination is present. The contaminated article should be tagged with the release date that decay would result in a 2 mr/hr level. The passenger should be informed of this and the fact that the article should be stored and not used until the date. Delta Air Lines will store the article if the passenger so desires. An offer should be made to have his home surveyed. Judgment *must* be exercised in the expression of this offer based on the level and extent of contamination found.

9. Home Surveys

a. The home survey should be performed promptly. The passenger should be qualitatively informed of survey results by the Delta representative. Passenger property should NOT be destroyed nor confiscated. Rather, the passenger should be informed of acceptable cleaning practices, the fact that the radioactivity will disappear naturally to acceptable levels within a specified time, and some statement of hazard. The date on which decay will result in a 2 mr/hr level should be made known to the passenger.

b. Adequate records should be maintained of the home surveys. Delta Air Lines should be informed of the results and should serve as the contact point and make all arrangements for the survey.

c. Upon completion of a home survey, the member of the team that performed the survey should inform the AEC, Division of Compliance, HQ, telephonically of the result (301) 973-1900. The caller should ask for Mr. J. R. Metzger or Mr. G. W. Roy. Calls may be made collect.

d. If a team anticipates that a requested home survey cannot be accomplished within 48 hours, additional assistance should be requested by the AEC Radiological Assistance Team member through Radiological Assistance Team channels.

TENNESSEE VALLEY AUTHORITY
CHATTANOOGA, TENNESSEE 37401

June 2[illegible], 1976

Mr. Guy A. Arlotto, Director
Division of Engineering Standards
Office of Standards Development
Nuclear Regulatory Commission
Washington, D.C. 20555

DOCKET NUMBER
PROPOSED RULE PR-71,73 (40FR23678)
Trans. Radioactive
Mtl. by air

Dear Mr. Arlotto:

This is in response to your letter of April 26, 1976, to Dr. Lewis B. Nelson, regarding the Draft Environmental Statement on The Transportation of Radioactive Material by Air and Other Modes.

Pursuant to Section 5 of the Tennessee Valley Authority Act of 1933, [48 Stat. 58, as amended, 16 U.S.C. Sec. 831d (1970), Supp. IV, 1974], TVA is authorized to develop new fertilizer products and cooperate in the experimental research, development, and use of such products. In this connection, TVA's National Fertilizer Development Center has since 1967, under license from the U.S. Nuclear Regulatory Commission, prepared small amounts of fertilizer materials tagged with the radioactive isotopes of ^{32}P, ^{33}P, ^{35}S, or ^{45}Ca for research and experimental use and shipped them to many locations in the United States and foreign countries. The fertilizer materials used and shipped for this purpose usually are: (1) ordinary and concentrated superphosphates, (2) monoammonium and diammonium phosphates, and (3) calcium sulfate. Only solid materials are shipped. They have a low order of corrosivity, are nontoxic (except possibly when ingested), are nonexplosive, nonflammable, and not subject to spontaneous combustion. In fact, ammonium phosphates are used as fire retardants.

Our usual range of shipping weights, specific activity, surface radiation level, and transport index are tabulated below.

No. of containers/ shipment	Material wt./shipping container, g	Specific activity (mCi/g of material)	Surface radiation of package (mR/hr)	Transport index (mR/hr at 3-ft distance)
1-3	100-2500	0.5	0.5-25	0.05-1

Acknowledged by card 6/25/76 LJ

Mr. Guy A. Arlotto June 2 1975

We expect that most of our future shipments will remain in this range, and we could commit ourselves to not exceeding these limits, if necessary. Although TVA is licensed by the Nuclear Regulatory Commission to handle and ship to authorized recipients materials containing as much as 3000 millicuries of ^{32}P, or 1000 millicuries of ^{33}P, or 1500 millicuries of ^{35}S, or 100 millicuries of ^{45}Ca, our usual shipments contain far lower amounts.

Our packaging, labeling, and inspection procedures are based on those outlined in the document, A Review of the Department of Transportation (DOT) Regulations for Transport of Radioactive Materials, printed December 1972 by the Department of Transportation.

We believe it is essential that regulations continue to allow shipment of these materials by passenger-carrying aircraft because air cargo transport is neither available from the local airport where the materials are developed nor at the location of many of the recipients of the materials. Additionally, brief transit time for these materials is necessary because decay of the radioactive elements is rapid, and it is important that the time between preparation and use be short. If the tagged materials are shipped by much slower surface transportation, it would be necessary to tag them at significantly higher levels, which would have the effect of increasing their hazard potential.

The short half-lives of these materials require very tightly coordinated transportation schedules, and in some cases, verification of progress. Larger shipments could not be as readily scheduled or traced in their progress.

We appreciate the opportunity to comment, and ask your very thorough consideration of the comments provided.

Sincerely,

Peter A. Krenkel, Ph.D., P.E.
Director of Environmental Planning

DOCKET NUMBER
PROPOSED RULE PR-71,73(40FR23768)
Trans. Radioactive
Mtl. by Air

STATE OF NEW YORK

LOUIS J. LEFKOWITZ
ATTORNEY GENERAL

DEPARTMENT OF LAW
TWO WORLD TRADE CENTER
NEW YORK, N.Y. 10047
TELEPHONE: (212) 488-7562

PHILIP WEINBERG
ASSISTANT ATTORNEY GENERAL
IN CHARGE OF
ENVIRONMENTAL PROTECTION
BUREAU

JUN 2 1976

Director
Office of Standards Development
United States Nuclear Regulatory Commission
Washington, D.C. 20555

Re: Comments on the Nuclear Regulatory Commission's Draft Environmental Impact Statement on the Transportation of Radioactive Materials (NUREG-0034)

Dear Sir:

On May 17, 1976 the New York State Attorney General submitted comments to you on certain portions of the above-referenced document. At that time we informed you that additional comments were being prepared on other portions of the Draft Environmental Impact Statement ("DES") and would be submitted in the future. These comments are now complete and are enclosed herewith for docketing in the proceedings on the DES. Thank you for your cooperation.

Acknowledged by card 6/22/76

Very truly yours,

LOUIS J. LEFKOWITZ
Attorney General
by:

JOHN F. SHEA III
Assistant Attorney General

Comments by

John W. Gofman, M.D., Ph.D.

on

Draft Environmental Statement on The Transportation of Radioactive Materials by Air and Other Modes, Docket No. 71-73 (40 FR 23768), March 1976, U.S. Nuclear Regulatory Commission, Office of Standards Development

Submitted on behalf of
The Attorney General of the State of New York

John W. Gofman is Professor Emeritus, Medical Physics, University of California, Berkeley, California, 94720. Home address is 1045 Clayton Street, San Francisco, California, 94117

Prepared May 16, 1976

These comments will be limited to the subject of plutonium and its health hazards, in the context of the DES. The DES is totally unacceptable in its evaluation of the inhalation hazard of plutonium, since the errors in treatment of this subject are numerous and large. Consequently all the evaluations of the consequences of plutonium dispersal in the event of container failures are not only irrelevant to the true problem, but they do a severe disservice in grossly underestimating the true medical cost of such dispersals.

Point 1. The lung dose per curie inhaled is given as $2x10^8$ rems in Table III-7 (for insoluble PuO_2.) This value is manifestly incorrect. Gofman (1) and Cohen (2) agree that the dose is $2x10^9$ rems per curie deposited. Correcting this , from deposited to inhaled, we should reduce the value four-fold. Therefore, the correct value is $5x\ 10^8$, which is 2½ times as great a dose as presented in the DES. But this is only the beginning of the serious underestimate of dose from plutonium in the DES. All calculations of the DES are based upon the ICRP Model (Figure B-2 in Appendix B). That Model makes the erroneous assumption that no plutonium is retained for long-term delivery of dose to the bronchial region, an assumption based upon no evidence whatever and totally in contradiction with evidence concerning the impairment of bronchial ciliary function in cigarette smokers and in non-smokers . (See Gofman (1). When this is taken into account and when the small mass of the cancer-relevant bronchial tissue is taken into account, (one gram instead of the 570 grams of the whole lung) we end up with the following correction factors that must be applied to the DES estimates of dosage:

For cigarette smokers, dose must be multiplied by 103 times,
For non-smokers, the dose must be multiplied by 8.2 times.

Therefore, overall, incorporating these factors and the 2½ factor above, the DES underestimates the dose for plutonium inhalation by 257.5 times for cigarette smokers and by 20.5 times for non-smokers. These errors, alone, are sufficient to invalidate all the consequences of dispersion estimated in the DES But these are not the only serious errors concerning effects estimation.

Point 2 . In Table III-9 the DES estimates latent cancer fatalities as 22.2 deaths per 10^6 person-rems of exposure to the population. The data of reference 1 point to a more correct value of 762 deaths per 10^6 person-rems on the same calculation basis. Therefore, the DES estimate is some 34.3 times too low in its cancer estimate. If this underestimate of effe. is combined with the underestimates of dose, we arrive finally at the following error estimates for the DES evaluation:

For Cigarette smokers, effects must be 3533 times larger than DES estimates,
For non-smokers, the effects must be multiplied by 281.3 times to correct the DES estimates.

The final result of such corrections is to make the DES estimates totally meaningless as they stand in the report.

Point 3: In Appendix B , page B-12 the DES refers to " ... the median lethal dose of plutonium as 260 micrograms" This statement is not only

meaningless, it is grossly erroneous. The dose that guarantees a lung cancer fatality is 0.058 micrograms of Pu^{239} for cigarette smokers and it is 7.3 micrograms for non-smokers. Thus, for cigarette smokers, a dose 4483 times smaller than the DES will kill all humans, whereas the DES estimates their dose will kill ½ those exposed. Thus the DES is much more than 4483 times too low on plutonium toxicity. For non-smokers the amount required to guarantee fatality is 35.6 times lower than the dose DES calculates will only kill one half of the exposed. Unless the Nuclc Regulatory Commission learns something of the true toxicity of plutonium it is likely to continue to make such absurd statements as that on page B-12 that "Although plutonium is certainly a potentially dangerous mater ial, it is not orders of magnitude more potent than numerous other existing materials".

Point 4. On page B-10, the DES states, " Cancers have been induced in laboratory animals, although no cancers attributable to plutonium have been observed in humans." This statement is not only meaningless, it is dangerous. What the DES should state is " No meaningful study has been undertaken to determine how many lung cancer fatalities have been caused by plutonium handling." For the population-at-large, the best estimate currently available is that plutonium fallout has condemned 1 million persons in the Northern Hemisphere to lung cancer deaths.(Gcrman,(3).

Summary

The DES has so seriously underestimated both the dose and the effects for plutonium exposure that all of its comments on dispersal of plutonium must be regarded as worthless.

References:

(1) Gofman, John W., "The Cancer Hazard from Inhaled Plutonium May 14, 1975. CNR Report 1965-1R , Committee for Nuclear Responsibility, Yachats, Oregon.

(2) Cohen, B.L. "The Hazards in Plutonium Dispersal" Report of the Institute for Energy Analysis, Oak Ridge Associated Universities, March , 1975, Oak Ridge , Tennessee.

(3) Gofman, John W. "Estimated Production of Human Lung Cancer by Plutonium from Worldwide Fallout" , July 10, 1975, CNR Report 1975-2, Committee for Nuclear Responsibility, Yachats, Oregon.

COMMENTS OF THE NEW YORK STATE ATTORNEY GENERAL ON THE DISCUSSION OF TOXICITY OF MATERIALS, CONTAINERIZATION, RELEASE OF MATERIALS AND GENERAL RISK ANALYSIS IN THE NUCLEAR REGULATORY COMMISSION'S DRAFT ENVIRONMENTAL IMPACT STATEMENT ON THE TRANSPORTATION OF RADIOACTIVE MATERIALS BY AIR AND OTHER MODES

NUREG 0034

BY

DR. MARVIN RESNIKOFF
PETER N. SKINNER, P.E.

Introduction

1. Previously numerous affidavits were submitted by the State of New York to the United States District Court for the Southern District of New York in the Case of the State of New York v. The Nuclear Regulatory Commission, et al. Copies of these affidavits have been provided to the Nuclear Regulatory Commission ("NRC") in the course of this proceeding dealing with the transportation of radioactive materials as originally noticed in the Federal Register. 40 Fed. Reg. 23768. References to the "plaintiff" in these comments on the Draft Environmental Impact Statement ("DES") are, of course, to the State of New York. Occasionally references are made to the "defendants" and "defendants' affidavits"; these references are to the NRC and its sister agencies which are involved with the transportation of radioactive materials and the affidavits which this agency and its sister agencies have filed in the litigation initiated by the State of New York.

2. We have examined certain parts of the DES dealing with toxicity of materials, containerization, dispersion, crash environments and risk analyses of various modes of transport and it is our conclusion that the DES is a fatally defective document and, as such, cannot be relied upon as an accurate or adequate document by the Congress or the public.

Shipment Size

3. For the purposes of the DES the authors assumed an air shipment of plutonium with a size of four packages containing five kilograms each for a total of 20 kgs. (Tables V-13, V-12, V-7). Actual practice seems to indicate that larger sized shipments are more realistic. For instance, two JFK PuO_2 shipments on July 29, 1974 and February 24, 1975 weighed 48.3 kilograms and 45.1 kilograms respectively, each more than twice the size assumed by the DES. This assumption undercuts the credibility of the "worst case" scenario.

Containerization

4. Whether or not plutonium powder will escape its container during an air accident is dependent on two factors, the strength of the container and the severity of the accident environment. Considering the first of these, the DES makes only a passing reference to the wealth of material available as a result of the work done by Sandia Laboratories, and others, as well as a great deal of data supplied by the many experts appearing in the case of State of New York v. Nuclear Regulatory Commission, et al., United States District Court for the Southern District of New York (75 Civ. 2121 [WCC]). No data whatsoever can be found in the DES to dispute the criticism in the affidavits previously filed by the State in that case and in the Nuclear Regulatory Commission ("NRC") proceeding on transportation noticed at 40 Fed. Reg. 23768.

5. It has been determined under performance test conditions that the integrity of these containers are breached by levels of test crash environment intensity which are significantly less severe than actual air crash environments (Def. Aff., Nussbaumer, Exh. D; Pl. Aff., Pinkel, p. 6; Resnikoff, [6/12/75], p. 3). In fact, during test drops done for NRC at speeds of only 130 feet per second, even the inner pressure vessels were caused to leak (Pl. Aff., Resnikoff [6/12/75], p. 3; Def. Aff., Nussbaumer, Exh. D.). The Sandia Laboratory Report, "Special Tests for Plutonium Shipping Containers", annexed to the

Nussbaumer affidavit as Exhibit D, candidly admits that, if impact speeds were raised to 150 feet per second, spillage of nuclear material is likely (Pl. Aff., Pinkel, p. 6; Def. Aff., Nussbaumer, Exh. D). Yet the DES classification scheme for accident severity categories assumes that no material will leak from cannisters in such accidents. Hence, these assumptions in the DES directly contradict the earlier affidavits of defendants submitted to the Federal District Court and the NRC.

6. No thought has been given to the potential of penetration damage due to shrapnel-like fragments of disintegrating airplane components resulting from an air accident (Pl. Aff., Pinkel, p. 7). Dr. Chapman, formerly of the Cornell Aeronautical Laboratory, is in agreement with Mr. Pinkel and Dr. Resnikoff when he concludes that, given the present containers, there is little assurance of containment of materials in air crash environments, which are clearly more severe, more complex and of greater impact than accidents in other modes of transport (Pl. Aff., Chapman, pp. 2-3; see also Pinkel, Resnikoff) The containers now in use by the NRC, their agents and licensees are clearly not designed from a complete knowledge of the air crash environment and continued use of such containers in air transport jeopardizes human life (Pl. Aff., Pinkel, p. 10).

7. Cannister strength is lightly treated by the DES on pages V-24, 25, and 26 and VI-48 and 49. At this late date the NRC admits that "only a limited number of containers [have been] tested." The DES assumes that "Model I" packaging (that is cannisters meeting current regulations) would fail (p. V-12). As to cannister "Model II", which is deemed by the NRC to be a conservative approximation of "real containers in an accident environment" (VI-26), and hence the critical link for NRC's allegations as to safety of containerization, the authors rely on unspecified "personal communications" for substantiation of their various assumptions. This totally undermines the validity of this analysis for the purposes of this DES. The authors arbitrarily define fractions of plutonium powder shipments which will

released in the event of an air accident of a given severity class. Of the two references presented to support these arbitrary assumptions, one, (9) (p. V-24) is a private communication "private communication" is also refered to earlier on page V-1. in regard to population densities across the country. "Private communications" are a highly suspect source for a very important parameter for study of this area. No specific data is ever identified as stemming from this "personal communication"; and hence, no basis is given for the authors assumptions as to accident severity classes and release model fractions. These models are unverifiable and, as a result, highly questionable, to say the least.

Accident Environments

8. The DES presents an abbreviated analysis for the complex and controversial area of accident environments. The authors of the DES consider only that damage inflicted on the containers by assumed fire and speed of impact factors and do not consider crush and puncture damage, the very damage mechanisms deemed to be so significant in the earlier Sandia report which was placed on the record of the State's case by the defendants themselves (Def. Aff. Nussbaumer, Exh. C, D and F).

9. Nothing in the text of the DES indicates how the authors established accident type classifications on the basis of papers by "Clark et al." (p. V-60). Since the NRC has made the work of Clark et al. central to the determination of these "type classes", specific discussion of all relevant portions of that material must be provided if this part of the DES is to have any validity.

Release

10. It is significant that the earlier analyses by Resnikoff (Pl. Aff. April 25 and June 12, 1975), which only assumed 1/16 of the DES "worst case" release, resulted in the tens of thousands of Latent Cancer Fatalities ("LCF's"). Had he used a

20 kilogram release instead, hundreds of thousands of people would have become LCF's in all three cases of meteorological stability. (See Pl. Aff. Resnikoff, April 25, 1975, Appendix D).

Dispersion and Resuspension

11. The degree to which the public would become exposed to plutonium powder in the event of an air accident is dependent on the parameters discussed earlier and on several others as well; dispersion is one of them. The DES presents an almost incomprehensible complex of figures and explanations on this topic. A number of factors necessary for the reader's reproduction of the conclusions as to dispersion are omitted or inadequately described. The basic input term of deposition velocity, necessary for standard Gaussian analyses, is completely missing. Apparently Figure V-11, "Specific Dose vs. Area", is important to the DES's determination of areas which would be covered by plutonium powder after an accident. The term, Specific Dose (rem/gm), is depicted as varying with the area enclosing such a dose. This is an internally inconsistent concept (rems/gram of plutonium does not vary -- it is a constant). Yet the concept becomes, by the use of other vague factors, the basis for figures V-12 and V-13, which set forth the number of people affected. Because of the inconsistencies and lack of descriptive information contained in the DES on this issue, we have been precluded from further comment on this analysis.

12. Both Robert Barker of the NRC (Def. Aff. sworn May 30, 1975) and Dr. Marvin Resnikoff (Pl. Aff. sworn April 25, 1975 and June 12, 1975) (one of the deponents herein) utilized Gaussian models with full explanation of the input parameters and sensitivity thereto. The DES, inconsistent with the analysis of the NRC's own expert, Barker, does not even explain these differences in approach between the DES and the Gaussian analyses. The discussion of contradictions later in these comments shows that the DES predicts 617 Latent Cancer Fatalities, Barker 15,000, and Resnikoff 107,000. Since the DES arrives at conclusions different than either of those models, some

explanation is required before the DES can possibly be relied on as having any validity.

13. Dispersion is also dependent on the meteorological conditions assumed. Calm weather increases the amount of individual dosages and turbulent conditions decrease dosages. In the DES the authors state: "A year or more of data record (sic) for these parameters is used in the model which was obtained at two different locations" (p. V-29-30). Neither the data recorded nor the locations studied were presented; yet these factors quite obviously have tremendous impact on the conclusions presented in figure V-10. Such data were presented by Barker (Def. Aff. p. 17 and exhibits) and Resnikoff (Pl. Aff. April 25, 1975 Table 2). Once again this omission precludes reproduction of the DES's conclusions by the reader. The DES's use of only average conditions from the "year or more of data" recorded does not present scenarios capable of producing "worst-case accident consequences" found in figures V-11 and V-12.

14. Resuspension of the powder once it has settled out of the atmosphere onto buildings, vehicles, roads, etc. will plague decontamination and evacuation efforts and increase exposures to the public. The DES states only that "the contribution to the total dose from cloud shine, ground shine, and resuspension can be obtained by the application of established factors to the results shown in figure V-11 . . ." (p. V-39). No use or actual application of these highly important "factors" is to be found in the DES.

Respirability

15. Plutonium powder comes in various size gradations, depending on the source, some being more likely to settle in the lung than others. The more plutonium which settles in the lung, the greater the degree of risk of lung cancer. The authors of the DES assume 20% will be a candidate for deposition on the basis of particle size gradation of Fast Flux Test Facility ("FFTF") feed material (p. V-40), stated by the DES to be 20%

respirable. However, plutonium oxide shipments through JFK in 1974 and 1975 (p. V-43) were admitted by the NRC to be 40% respirable. Indeed even the DES assumption of 40% respirability for JFK shipments is far too low as the authors have based that figure on a statistical construct of a 3.3 micron mean size of particles in those shipments. However, uncontested information in the record of the State's case against the NRC indicates that the range of particle size (.92 - 1.12 microns) did not include 3.3 micron particles at all, much less a mean particle size of 3.3 microns (Pl. Aff. Skinner, Appendix B). Since particles below 3.3 microns are " . . . considered to be respirable and candidates for deposition in the pulmonary tissue . . . " (p. V-40), it is accurate to say that 100% of the JFK shipments were candidates for lung deposition. Use of a 20% respirability figure represents a significant underestimate of plutonium's dangers. Again the DES proves to be a document replete with invalid assumptions.

Population Concentrations

16. The DES assumes 10,000 people/square mile to be a "High Population Density" (p. V-30). Examination, however, of the Tri-State Regional Planning Commission 1970 Census population distribution shows that there are only a few square miles within a zone of maximum impact in New York City with 10,000 persons or less (Pl. Aff. Skinner-Wang sworn June 13, 1975, exhibit 7). The Skinner-Wang affidavit utilizes 40,000 persons/square mile as a more representative value for a "worst case" accident at JFK. According to that affidavit a four-fold increase in population density would result in a four-fold increase in the impact presented in figures V-12 and V-13 of the DES.

Biological Half-life

17. Radioactive material has a normal decay half-life of the material itself. In addition, when a radioactive material is taken up by the body, natural biological processes can expel a part of that uptake. The rate at which the expulsion takes place is known as the biological half-life. For the purposes

of the DES the authors chose 500 days (page III-16). This assumption appears to be a significant underestimate. In the appendix to the DES (page B-7), the authors admit the " . . . lung clearance half-time" is 200-1,000 days. In order to obtain the worst-case scenario as described in figures V-12 and V-13, the authors should have used 1,000 days, not 500. There is significant authority for the use of such a value. The U.S. Environmental Protection Agency ("EPA") reports in its publication, "Environmental Analysis of the Uranium Fuel Cycle, Part III - Nuclear Fuel Reprocessing, 520/19-73003-D, that the new International Commission on Radiation Protection ("ICRP") lung model assumes a 1,000 day half-life as does the NRC's WASH-1535 "LMFBR Program Environmental Statement" in that document's Table II.G-9.

Biological Effectiveness

18. Another area of disagreement lies in the biological effectiveness (i.e., effect on tissue) of given gram of plutonium. The DES uses a figure of 2.0×10^8 rems/curies. The NRC's WASH 1535 at Table II.G-10 presents a figure of 8.6×10^8 rems/curie. According to the USEPA (Id.), ICRP now uses 16.5×10^8 rems/curie for Pu-239. Since the DES relies on the Pu-239 value of 2.0×10^8 for its conversion calculation of the biological effectiveness of reactor type Pu (that shipped through a JFK) (Page B-4), it is clear that the danger of plutonium inhalation may be understated by the DES by over 8 times. At any rate, the resulting impact calculated from the 2.0×11^8 number cannot be considered a "worst case" impact.

19. Recycle of plutonium in today's light water reactor fuels will increase the concentrations of certain isotopes of plutonium in any shipments by air as shown below.

Plutonium Constituents

Constitutent	DES (B-5)	JFK*	WASH. 1327**
Pu-238	1.9%	0.6%	4%
Pu-239	63.0%	72.0%	43%
Pu-240	19.0%	18.7%	26%
Pu-241	12.0%	7.0%	15%
Pu-242	3.8%	1.6%	11%
Am-241	0.6%		1%
Rems/curie	10.6×10^6	39×10^6	83×10^6

(See April 25, 1975 Resnikoff affidavit - table 2 for calculations of Rems/curie)

These increases mean that the latent cancer danger of plutonium powder will increase by about 100% when plutonium recycle matures. This effect has not been taken into account in tables V-16 and V-17 of the DES.

Latent Cancer Fatalities

20. Latent Cancer Fatalities ("LCF") is an epidemiological factor. When a population receives a dose of radioactive material, the LCF factor can be used to predict the number of fatalities due to this dosage above the average one can expect from other causes. The authors of the DES chose 22.2 LCF/10^6 person-rems for lung cancer on the basis of the BEIR report (p. III-23). This number is smaller than a that in a number of other reports. USEPA has assumed 50 LCF/10^6 person rem. Dr. John Gofman reports that Cohen has used 39 LCF/10^6 person rem and assumes 762 LCF/10^6 person rem himself (Pl. Aff. Gofman, Exhibit B, p. 6). From these data it can be clearly shown that the DES has understated the danger of plutonium inhalation by as much as 34 times. The specific origin of the Latent Cancer Fatalities figure (20 per year for 30 years) (p.ii), which allegedly could be produced from the DES's plutonium

*Pl. Aff. Skirner-Wang affidavit, sworn June 13, 1975, Exhibit 7

**"Draft Generic Environmental Statement on Mixed Oxide Fuel", p. IV C-62.

accident scenario, cannot be found anywhere. Throughout the numerical presentations the reader is forced to do detective work to find the computational framework (often apparently guesswork) utilized by the authors, often without success.

21. Of interest as well is the DES's use of cutoff points for the production of LCF's from population exposure. Standard epidemiological analysis utilizes the formulas described above (LCFs/10^6 person-rems) based on the whole population exposed. This method is necessary to integrate the natural variability of people's response to carcinogens. Although the DES uses the above epidemiological tool, it applies that tool only to a part of the population, that part which has sustained more than a given dose, thereby eliminating a significant number of exposed persons (or person-rems) from consideration. Table V-13 employs a cutoff of 15 rem. That part of the exposed population, perhaps millions of people who, receiving less than 15 rem, are excluded from epidemiological consideration - i.e. they are deemed by the DES as not being potential cancer victims. Such a method is contrary to standard epidemiological practice (as utilized in the Skinner-Wang affidavit of June 13, 1975, Exhibit 1). The method employed by the DES significantly reduces the impact of a dispersion accident.

22. A similar cutoff or threshold was applied to calculations underlying figure V-10. The cutoff of .8 rem was used for depicting the area enclosing populations dosed at that level. Since this figure is based on a one kilogram release and the DES worst case scenario was based on a 20 kg release, one can readily see that the actual cutoff is not .8 but actually (1) 20 x (.8) or 16 rems or (.5) (20) x (.8) or 8 rems depending on the fraction of a shipment released (p. V-25).

23. Another significant underestimate in impact consequences can be found in Table V-13's use of the "Integrated 1 year dose" factor. Instead of presenting the number of people who would have suffered irradiation over their 50 year adult lifetime, the DES presents a smaller number on the basis of only a 1 year dose. The text of the DES does not describe how this integration was done, which precludes adequate analysis by ourselves at this time.

Sensitivity Analysis

24. The sensitivity analysis presented in Appendix G of the DES covers a number of factors which can be varied for an examination of the range of effects on calculated impact. The "theoretical basis" for this analysis is in equation (2) $\Delta I \cong \frac{dI}{dX} \Delta X$. This is an elaborate way of saying that, if the dependent variable (X) is changed by a certain amount (ΔX), ΔI will change on the basis of dI/dX. For the few variables analysed in this manner, none of the dI/dX conponents are presented and the methods and assumptions utilized to get them are missing as well.

25. Although many variables have been mentioned herein as being underestimates, only one of these, population density, is analyzed in the DES for sensitivity in the accident scenarios. As mentioned before (Pl. Aff. Skinner-Wang, sworn June 13, 1975, Table A) we maintain that 40,000 people/square mile is a more representative population density for the New York City region imperiled by plutonium air shipments. This represents a 400% increase over the baseline population density (10,000/mile^2) NOT 10% as the DES assumes.

26. Assuming a linear dI/dX term the 5.1% increase in baseline value (Figure G-2) would ge increased by a factor of some 204%. Therefore LCF numbers would be doubled due to the four times greater density of population in the region at risk. The sensitivity of this parameter in the DES is contradicted by

an uncontested affidavit filed by the State in its case against the NRC (Skinner and Wang, sworn to June 13, 1975). That affidavit shows that a 400% increase in population density would occasion a 400% increase in lung cancer fatalities (see Tables 1-9). The analysis of Annual Early Fatality Probability increases (DES Figure G-3) does not consider population density in such a way as to be meaningful in terms of figure V-13.

27. This section in the DES on sensitivity analysis is totally inadequate, having failed to analyze those variables we have discussed herein and having further failed to consider other variables essential to a valid final impact assessment (e.g. shipments by barge, putting plutonium in "bulk" form).

28. The term "lung cancer fatalities" utilized in the Skinner-Wang affidavit sworn June 13, 1976 can be used interchangeably with the DES's term, latent cancer fatalities. Lung cancer fatalities utilized in the Skinner-Wang affidavit above also include the DES's fatality sub-group, annual early fatalities. This overlap between the DES and Skinner-Wang analyses is really academic because the fatality occurs either way.

Contradictions and Discrepancies in NRC Analyses of Impact

A. Barker's Affidavit

29. The DES presents accident impact conclusions which, in part because of the nature of the assumptions used, were smaller than those previously claimed by the NRC in the NRC affidavit by Barker (p. 5-12). Unfortunately lack of clarity and documentation in the DES precludes complete comprehension of all the origins of these discrepancies. Therefore preliminary analyses were made using known dispersion models with the major known impact assumptions used in the DES.

30. Utilizing the model presented by Barker in his affidavit (Memo dated 5/14/75 by J.H. Cusack from Brookhaven National Laboratory ["BNL"]), an impact consequence for a DES

"worst-case" release yielded more than 53,000 LCFs (see calculations attached).

31. We used Table No. 6 of that memo because it appears to be a "worst-case" analysis and DES purports to have "worst-case" analysis as its primary purpose.

32. Because of the lack of clarity and specifics in the DES model, we were unable to use that model and we utilized the Barker model instead, changing only the amount of plutonium oxide released. The Barker model originally used a release of approximately 1.25 Kgs. (page 1 BNL memo). We changed this amount to the amount utilized in the DES, 10 Kgs. All other inputs were kept the same. This changed the value of latent cancer fatalities of 15,000 people which the Barker model predicted in Table No. 6 of the BNL memo (Pl. Aff. Skinner-Wang, sworn to June 13, 1975, Table A) to an astounding total of 53,000 people. The DES on the other hand, on page ii, predicted only 617 fatalities. The only possible explanation for this conflict lies in the many assumptions used by the DES which remain secret and unavailable for scrutiny by Congress or the public.

B. The NRC's Model in the Generic Environmental Statement on Mixed Fuel ("GESMO") WASH 1327

33. On pages V-48 and V-49 of the GESMO, assessing plutonium recycle, an abbreviated model is presented which describes the dispersion of plutonium based on a 2 Kg. release. Although the model fails to calculate contaminated areas and the number of persons affected, one can utilize it to determine these impact parameters with the help of the Resnikoff methods in the Resnikoff affidavit (April 25, 1975), which are very similar to the GESMO method.

Assumptions

1.	Distance form point of release (GESMO, p. V-48).	40 miles
2.	Amount respirable (Skinner Affidavt sworn April 29, 1975, Exh. 7)	100%
3.	Amount expelled by lungs (DES V-42)	70%
4.	χ at 40 miles (GESMO, p. V-48)	8.1×10^{-4} gm-sec/m^3
5.	Release Height (DES p. V-31 and Barker BNL memo, p. 1)	Elevated
6.	Release Quantity, PuO_2 (DES p. V-25, Model II)	10 kg.
7.	Specific Dose Pu-239 (DES p. III-19)	2×10^8 rem/ci
8.	Specific Activity Pu-239 (DES p. B-5)	.06 ci/gram
9.	Reactor Pu Conversion factor (DES p. B-4)	11.2
10.	Standard man's breathing rate (Rad. Health Handbook)	3.3×10^{-4} m^3/sec

34. When we properly arranged the assumptions, the calculations yeilded the conclusion that the DES severely understates the impact consequences for a plutonium dispersion accident. Our calculations are as follows:

(1.0 - .7 = .3) [fraction remaining in lung] times

8.1×10^{-4} gm-sec/m^3 [χ] times

3.3×10^4 m^3/sec [Volume Breathed] equals

8.1×10^{-8} grams in the lung.

Then,

8.1×10^{-8} [grams in the lung] times

2.0×10^{-8} rem/curie [exposure] times

.06 curie/gram [specific activity] times

11.2 [conversion factor] times

10 kg [DES release] divided by

2 kg [GESMO release] equals

54 rems to a person @ 40 miles from the release site

35. Substitution of the χ value for a distance 1,800 feet yields the value of 115,000 rems exposure to a person located there.

36. Assuming GESMO utilized the worst-case conditions, stability Class F (Case B in Pl. Aff. Resnikoff, Table 2), over 1.4 million people would be exposed in the dispersion arc to 54 rems or more. On the other hand, the DES states in table V-13 that only 280,600 persons are being exposed to 15 rems or more. This massive inconsistency between the DES and other NRC documents totally undercuts the validity of the health effects model of the DES for air transport of plutonium.

Miscellaneous Questions and Comments

37. The alternative of transporting materials by water is given only minimal consideration in Chapt. IV, Section D.4 Page IV-34. No information is given about the present volume of material shipped by water. It seems clear that in certain localities, water transport may indeed be an alternative to conventional inter-city ground transport modes, and might result in significant reductions in exposure in both normal and accident situations. Although plutonium is the major contributor to accident latent cancer fatalities, it has a long half-life. Thus the shipment of plutonium by water may be economically feasible as well.

38. There is a major difficulty in determining the areas of sensitivity when the various parameters in the risk equation for accident scenarios, pg. V-8 are changed in alternative situations. We are provided with a set of figures for the baseline and alternative situations, but nowhere are there any intermediate or exemplary calculations which would show what, specifically, contributed to the change between the baseline and alternative figures. For example, in Table VI-3, page 41-7, we are given the set of figures for all air shipments being instead transported by truck. But it is impossible to tell from these new figure alone, just what contributed to the alternative results -- a difference in vehicle miles/year, probability of accidents, accidents of

different severity classes, etc. Without the benefit of intermediate calculations, it is impossible to determine why the proposed alternatives result in the changes given in the summaries.

39. The methods of obtaining figures for normal and accident L.C.F. in both baseline and alternative transport situations are quite unclear. There is no derivation given for the equation from which the baseline risk figures are obtained. (The equation itself is very difficult to find, especially in light of its exclusive use in determining the final figures). The variables used in this general equation are also hard to locate and several of them (e.g. vehicle miles/year for each type of shipment, probability/vehicle mile of a specific severity class accident) can only be obtained through a series of separate calculations. Calculations of the alternative results are made by changing a specific parameter in the original equation and following this through; this is obviously done with a computer program, but no program is provided, making it very difficult to reproduce these results. In addition, inconsistencies with the language used to show the changes between baseline and alternative situations make the results confusing and occasionally misleading. While most of the changes are represented in percentages, the very large reductions are not, e.g. a "factor of 16 decrease", which seems fairly small, actually represents a 94% decrease in the baseline figure, a very significant change. Particularly puzzling are the rankings of truck, rail, and passenger air transport (VI 53-55).

40. How are cancer fatality figures for normal and accident transport situations calculated? (Table VI-1, pg. VI-2)

41. What is the basis for figures in Table I-1 on annual person-rems in normal transport for each type of radionucleotide? How are the annual person-rem figures calculated in the alternative section (e.g. Table VI-4, pg. VI-10)?

42. How are mileage, exposure time and population dose figures detemined for alternative transportation modes? (e.g., switching from all passenger to all cargo air paragraphs 1 and 2, pg. VI-16).

43. For a diffusion model used to assess the consequences of release of radioactive materials, figure V-10, page V-31, what release height figures are used; and why are these chosen for each mode?

44. In the summaries of results for each transport mode, how are figures for "probabilities of ≥ 1 early fatalities/year" derived, e.g., Table VI-4, page VI-10.

45. Why are certain alternatives evaluated only with regard to cost, while discounting seemingly significant decreases in accident latent cancer fatality figures, e.g., Table VI-28, page VI-44.

46. In the release consequences analysis (chapter V, section E, page V-43), how do worst-case release heights vary from one mode of transportation to another (e.g., truck or helicopter accidents)?

47. On page VI-41, Section B.2 - 3.1, what procedure is used to determine reduction in truck accident rates due to the 3 alternatives given?

DEPARTMENT OF TRANSPORTATION
MATERIALS TRANSPORTATION BUREAU
WASHINGTON, D.C. 20590

DOCKET NUMBER
PROPOSED RULE PR-71,73(40FR23678)
Trans. Radioactive Mtls by Air

JUN 14 1976

Mr. Robert B. Minogue, Director
Office of Standards Development
U.S. Nuclear Regulatory Commission
Washington, D.C. 20555

Dear Mr. Minogue:

This refers to your April 1, 1976 letter, enclosing a copy of the Draft Environmental Statement on the Transportation of Radioactive Material by Air and Other Modes (NUREG-0034). As you know, our staff has been kept informed of the progress of this effort during the past year and, in fact, met with your staff, along with the Federal Aviation Administration's representatives prior to the initiation of the associated rulemaking proceeding in June 1975. The document appears to be a very comprehensive treatment of the subject addressed. The radiological data presented are consistent with currently available information and the references cited are generally accepted within the scientific community. The statistical data on risk assessment, accident probabilities, exposures to transport workers, etc., are drawn from the various studies recently conducted jointly by NRC and DOT. Our review has not revealed any anomalies or inaccuracies. The conclusions drawn by your staff and the recommendations offered are, in some cases, subjective and do not readily lend themselves to critical review, however, they do appear to be justified on the basis of the study and the assumptions made.

Specifically, we were pleased to note that your staff had concluded that the radiation exposure of individuals from normal transportation is within recommended limits for members of the general public. As you know, the subject of transportation workers' exposure to radiation during normal handling of radioactive packages has been the subject of intensive review by our agencies for the past several years. This study should be very useful in supporting the continuation of the present system whereby transport workers are not considered to be radiation workers in the course of handling radioactive materials shipments.

The conclusions drawn from this study with regard to the environmental impacts associated with both normal transportation and accidents involving radioactive materials, are especially noteworthy. The infinitely small impact from normal transport, as well as the very small risk from

Acknowledged by card 6/25/76 J.P.

accidents, should be especially helpful in our continuing efforts to allay the fears of the public as to the adequacy of the existing regulatory framework for transportation of radioactive materials. The information and conclusions from factual studies such as this provide a sound basis for rational public judgment. We appreciate the opportunity to review this document and will be glad to provide you with any information you consider necessary to proceed with its final publication.

Sincerely,

Alan I. Roberts
Director
Office of Hazardous Materials Operations

(89)

JUN 25 1976

1281 Emory St
San Jose, Calif. 95126
June 14, 1976

Subject: NURG-0034
Draft Environmental Statement
on
Transportation of Radioactive Material
By Air and Other Modes

DOCKET NUMBER
PROPOSED RULE PR-71, 73
(40 FR 23678)

Attention: Mr. Donald Hopkins
Task leader for this statement.

Dear Sir:

A letter from Mr. Anlotte dated May 18 gave me an extension of time to submit comment on this draft which I appreciate. I am one of the few private citizens who received copies of the draft and have given it serious study, desiring to make a responsible comment. Since I don't type and do not have access to a typist please forgive the informal appearance of this letter. I am deeply concerned

about a particular matter and will make myself as clear as possible.

In the detailed summary, p. xxvii it is stated that the impetus for the review includes, "a need to respond to current national discussions of safety and security aspects of nuclear fuel cycle materials." This statement suggests to me that your statistical conclusions include data concerning transportation of spent fuel from power plants. Ch. 1 pgs 10–15 & 6 discuss the nuclear power industry. Fig. I-1 p. I-2 shows spent fuel moving to & from reprocessing plants. Fig I-1 beginning on p. I-16 also refers to materials traveling to and from reprocessing plants.

Yet in Table I-3 p. I-21 you have <u>excluded</u> fuel cycle shipments – stating in a footnote that "this data is expected to be updated by a more extensive survey now in progress." In other words you are <u>not</u> including fuel cycle shipments in this study because you do not have necessary data.

Then on page I-24 you point out that the studies of nuclear fuel cycle shipments from which you do take information has not considered <u>air</u> transport.

Then, still on page I-24 you state flatly, (2nd par.)

"Since there are currently no HLRW shipments and few, if any, are anticipated by 1985, they are not explicitly treated in the model."

So, your statistical conclusions reported in the Summary + Conclusions at beginning of the book do not include data about shipment of irradiated fuel from nuclear power plants. And your stated stated purpose of answering public concern about nuclear fuel cycle material is not answered.

My concern is that you lead the reader to expect something which does not happen. And, what is worse, a perfunctory look at the early part of the book leads one to believe that the statistical conclusions cover all radioactive material shipments

To correct this situation, I suggest that you change the title

It seems to me your statement is actually concerned only with shipments which are or could be made by air + have compared the relative value of shipping these by other modes. Suggested title might be Comparison of environmental impact from shipment of radioactive materials by air + other modes.

Then in your early statements tell which materials are considered and why.

My next concern is that this book was published at great expense prematurely. I find 2 particular examples of this: Page I-3 tells of questionnaires sent out requesting data — the results of which were not in when this book was made up. and the already mentioned footnote on page I-21 expecting

updated data. You are badly in need, it seems to me, of more current data. I ran an average of the dates for all references listed at ends of chapters. The average age of your data is 4 years. Some of your references date back to 1955. Yet you went ahead & published your draft without fresh material. It's just a rehash of old studies.

In correspondence with the state agencies who were sent copies I learned that very few would be studying it and making any comment. They tell me they are understaffed and deluged with material of this kind.

With a little dedication & imagination as well as concern for the <u>reader</u> of your material you could write something much shorter & clearer. This book suggests that you intend to put people to sleep so they won't study & find out what you are trying to say.

I will be interested in hearing from you about fuller developement of this statement

Very truly yours,

(Mrs) Virginia Kerstiolt

P.S. I note that table I-3 pI-21 is based on a speech presented in 1974 concerning Transportation of hazardous material in air commerce. Yet in the table you do not make this clear. It looks like that are all pkgs shipped by any mode!

V.K.

DOCKET NUMBER PROPOSED RULE PR-71,73 (41 FR 23768)
Transportation of RNM By Air

ASSOCIATION OF
AMERICAN RAILROADS
LAW DEPARTMENT
AMERICAN RAILROADS BUILDING · WASHINGTON, D.C. 20036 · 202/293-4096-97

HARRY J BREITHAUPT, JR.
Vice President and General Counsel

June 25, 1976

Mr. Samuel J. Chilk
Secretary
U. S. Nuclear Regulatory Commission
Washington, D.C. 20555

Dear Mr. Chilk:

This refers to NUREG-0034, Draft Environmental Statement on the Transportation of Radioactive Material by Air and Other Modes, and particularly to statements on pages VI-44, 45 regarding the use of special trains for irradiated fuel shipments.

That draft appears to be the product of a rule-making proceeding that was initiated by notice in the Federal Register on June 2, 1975, Vol. 40, No. 106, p. 23768. At that time the Statement was to be directed to air transportation. The Association of American Railroads (AAR) was not aware of this Statement until recently during proceedings before the Interstate Commerce Commission in ICC Docket No. 36325, Radioactive Materials, Special Train Service, Nationwide.

In view of some of the statements contained in the draft concerning special train operations, it appears most unlikely that anyone with actual railroad experience was consulted. In particular, the statements on the pages referred to above appear to be based on a complete misunderstanding of the nature of special train service. There is a conclusion in the draft that ". . . the use of dedicated trains does not appear to be cost-effective." Such a conclusion is based on an assumption that the shipments would be in regular trains "dedicated" solely to radioactive material, and does not indicate a familiarity with the special service that is provided by the railroads as outlined in the attached excerpts from a special train tariff.

Acknowledged and 6-28-76, CRO

The draft states:

> "Almost 90% of all derailment accidents occurred at speeds less than 40 m.p.h. Thus, it is difficult to see how the use of special trains at reduced speeds (35-40 mph) could substantially reduce derailment accidents." (VI-44)

That conclusion was based on the erroneous assumption that there is no difference between special train service at 35 m.p.h. and regular train service at that speed. The fact is that the special handling and supervision given to special trains moving under the Special Train Service Tariff virtually eliminates accidents. The attached verified statements, which were filed by railroads in the ICC proceeding referrred to above, will provide additional information regarding the nature of special train service and show why, regardless of the mathematical theories applied on pages VI-44-45, in actual operations there is a great difference between regular train service and special train service as far as safety is concerned. As shown by these statements, a survey of five major railroads failed to disclose any indication that there had ever been an accident of any sort involving a special train operation, with the single exception of a heavy off-balanced load which derailed because of its off-balance nature, resulting in minor track and equipment damage, but with no damage to the lading and no injuries.

The conclusions on pages VI-44-45 were predicated on regular train service and a number of accidents (most of which were assumed not to be of a serious nature), but should have been predicated upon special train service with no accidents.

We would appreciate the Draft Environmental Statement being corrected accordingly.

Very truly yours,

cc: Ms. Janice K. Corr, Attorney
Office of the General Counsel
U. S. Nuclear Regulatory Commission
Washington, D.C. 20555
w/o attachments

Subject to increases in rates and charges as provided in Item 7-290, 7-301

V.C.C. S-430
(Cancels V.C.C. S-382)

I.C.C. S-1155
(Cancels I.C.C. S-1057)

SOUTHERN FREIGHT TARIFF BUREAU

(Southern Freight Association, Agent)

FREIGHT TARIFF S-842-N

(Cancels Freight Tariff S-842-M)

RULES AND CHARGES
GOVERNING
SPECIAL TRAIN SERVICE

BETWEEN POINTS IN

ALABAMA	ILLINOIS(Southern portion)	LOUISIANA(East of Mississippi River)	OHIO(Cincinnati, Portsmouth and vicinity)
ARKANSAS(Helena and West Helena)	INDIANA(Southern portion)	MISSISSIPPI	SOUTH CAROLINA
DISTRICT OF COLUMBIA	KENTUCKY	MISSOURI(St.Louis and vicinity)	TENNESSEE
FLORIDA		NORTH CAROLINA	VIRGINIA
GEORGIA			WEST VIRGINIA

This tariff applies on intrastate traffic only in the States of Alabama, Florida, Georgia, Kentucky, Louisiana, Mississippi, North Carolina, South Carolina, Tennessee and Virginia.

SPECIAL TRAIN SERVICE TARIFF

ISSUED FEBRUARY 27, 1974

EFFECTIVE APRIL 8, 1974

ISSUED BY
Z. C. BERRY,
Tariff Publishing Officer
151 ELLIS STREET, N.E.,
ATLANTA, GA. 30303

(The provisions published herein will, if effective, not result in an effect on the quality of the human environment.)

RULES AND OTHER GOVERNING PROVISIONS

GENERAL RULES AND REGULATIONS

ITEM	SUBJECT	APPLICATION
20	References embrace changes by supplement	Where reference is made in this tariff-- To an item, page rule or other provisions, such reference will also embrace reissues or amendments of said item, page, rule or other provisions. To "this tariff" or "herein", such reference will also embrace supplements thereto, unless otherwise specifically indicated. To another tariff, such reference will also embrace supplements to or successive issues of such other tariff, unless otherwise specifically indicated.
75	Method of cancelling items	As this tariff is supplemented, numbered items with letter suffixes cancel correspondingly numbered items in the original tariff or in a prior supplement. Letter suffixes will be used in alphabetical sequence starting with A. Example: Item 445-A cancels Item 445 and Item 365-B cancels Item 365-A in a prior supplement, which in turn canceled Item 365.
100	Method of denoting reissued matter in supplements.	Matter brought forward without change from one supplement to another will be designated as "Reissued" by a reference mark in the form of a square enclosing a number (or letter, or number and letter, in the case of intrastate supplements), the number (or letter, or number and letter) being that of the supplement in which the reissued matter first appeared in its currently effective form. To determine its original effective date, consult the supplement in which the reissued matter first became effective.

RULES AND CHARGES GOVERNING SPECIAL FREIGHT TRAIN SERVICE OR SPECIAL MIXED FREIGHT AND PASSENGER TRAIN SERVICE.

ITEM	SUBJECT	APPLICATION
120	Furnishing of Special Freight Train Service or Special Mixed Freight and Passenger Train Service.	Carriers parties to this tariff will, upon request as provided in Item 130 and at their convenience, furnish Special Freight Train Service or Special Mixed Freight and Passenger Train Service between any two points on their respective lines, locally (one carrier hauls) or jointly (two or more carrier hauls), subject to the charges and conditions hereinafter specified.
130	Definition of "Special Freight Train Service" or "Special Mixed Freight and Passenger Train Service".	Special Freight Train Service or Special Mixed Freight and Passenger Train Service, as used in this tariff, means a train which is operated on an expedited schedule at a charge in addition to the applicable class or commodity rates or fares, or a train which is assembled in accordance with instructions given to a rail carrier by a consignor, consignee, or any agent of a consignor or consignee. When a Special Freight Train or Special Mixed Freight and Passenger Train movement is requested, or the operation of Special Freight Train or a Special Mixed Freight and Passenger Train is necessary in order to comply with service or other transportation requirements specified, the charges shown in Item 140 will be applicable, subject to Note 1, this item. Note 1 - Consignor, consignee, or the agent of consignor or consignee must request Special Train Service (in writing, or by telephone confirmed by telegram or letter) as to each Special Train movement to be made under this tariff giving the involved carrier (or carriers) all necessary information as to such Special Train movement, including consist, date and time of movement, routing, and any other information and instructions pertinent to such movement, allowing sufficient time to enable said carrier (or carriers) to consummate whatever arrangements may be necessary to facilitate the movement of such train, including the assembly of equipment, personnel and other incidental requirements.

DOCKET NUMBER
PROPOSED RULE PR-7173 (41 FR 23768) NRP Ex. 5

See pp. 4-5

BEFORE THE

INTERSTATE COMMERCE COMMISSION

DOCKET NO. 36325

RADIOACTIVE MATERIALS, SPECIAL
TRAIN SERVICE, NATIONWIDE

VERIFIED STATEMENT OF

JOHN G. GERMAN (V.P. Engineering, Mo-Pac)

ON BEHALF OF RESPONDENT RAILROADS

DUE DATE: MAY 27, 1976

Verified Statement
of
John G. German

My name is John G. German. I am Vice President-Engineering for the Missouri Pacific Railroad Company headquartered at 210 N. 13th Street, St. Louis, Mo. 63103. I hold a B.S. degree in Mechanical Engineering from Case Institute of Technology. From December, 1943 through August, 1961, I was employed in the Mechanical Department of the Great Northern Railway at various locations as Assistant to Master Mechanic, Traveling Engineer, Master Mechanic, Assistant to Chief Mechanical Officer and Superintendent of Motive Power. Since September, 1961, I have been employed by the Missouri Pacific Railroad at St. Louis, Missouri as Chief Mechanical Officer, Assistant Vice President-Engineering and more recently as Vice President-Engineering.

In my present position I have responsibility for the design, construction and general condition of locomotives and cars, track and structures and signal and communications, including compliance with all governmental regulations relating thereto. In this position and throughout my entire career I have been in close contact with the operations of the railroad. I have been involved in the instructions concerning the handling of radioactive spent nuclear fuel cores since the Missouri Pacific first became involved with these movements between St. Louis and Kansas City in 1965.. Within the past year we have handled movements between New Orleans and Kansas City. All of these movements have involved DODX flat cars carrying special AEC (now ERDA) approved casks. All have moved in regular freight train service, but with special provisos

as follows:

Originally the AEC specified that these cars be handled on the rear of a freight train at a speed not to exceed 35 mph with the guard car immediately behind the shipment and just ahead of the caboose.

At the present time ERDA, who has replaced AEC, stamps on the waybill the following instructions: "Must not be humped. Do not switch with locomotive detached. Protection must be provided after classifications. Cars must be placed on rear of train next to caboose. Road conductor must periodically contact escort enroute. Speed restricted to 35 mph. This shipment must be placed in the clear of rail switch points when in a yard or siding."

German [illegible] for [illegible] that there are many shipments only.

In addition to these requirements Missouri Pacific added the requirements that the freight train not exceed 100 cars, that it would always be accompanied by an Operating officer, and that when meeting or passing other trains one of the trains must be stopped.

Obviously both agencies have recognized that from the standpoint of safety trains carrying the cask must not exceed 35 mph. These instructions are in accord with our own experiences gained through many years of handling large masses traveling at speeds up to 80 mph. Historically we have found it necessary to reduce speeds of shipments where the risk of high loss can be greatly reduced by lowering the speed. Even at 10 to 15 mph the impact of a heavy freight train against a standing freight train is so great that it causes complete destruction of locomotive units

and many cars, therefore we have seen no engineering reasons to increase this speed for any style of cask produced today.

I am aware of the tests that have been used to develop approved casks and I understand that spent fuel cores from commercial plants will be much hotter from a radiation standpoint than those from the navy ships and that the high level waste shipments will be extremely radioactive. In my opinion those involved in the proposed movement of spent nuclear cores from power plants and high level waste from reprocessing facilities have not fully addressed the problems that can arise in railroad transit, and in particular there are three questions that need to be resolved.

Nov. He has this reversed

1. In multiple track territory there is always the possibility of derailment of another train going in the opposite direction on an adjacent track. In the event of such accident should a tank car of LPG or some other such petrochemical rupture and torch against the cask, what temperature and time combination could the cask sustain without failure? In my opinion the fire test in a pool of oil at 1475°F. for ten or thirty minutes (according to type material) is a poor substitute for the torching condition which I know can occur at much higher temperatures in a very concentrated area for many hours.
2. We understand that should a cask rupture for any reason and the material goes on to the ground or perhaps even worse yet into a water supply, the area could be contaminated for many years.

Having seen the results of large masses colliding at speeds less than 35 mph, it is my opinion that the puncture test is still not a true measure of what could happen during the collision between another train and the cask car, be it a rear end, head on collision, or an oblique collision at railroad grade crossing.

3. Trains generally follow and cross many lakes and streams during their journey and of course these waterways generally serve as a source of drinking water for the general public. Considering the large amount of kinetic energy to be absorbed at time of collision what criteria have been established to allow the car and cask attachment to absorb this energy with a minimum chance of losing a ruptured cask from the car into a waterway.

After considering all factors involved in the movement of irradiated spent nuclear fuel cores from commercial power plants to reprocessing stations, and shipments of high level waste from the latter facilities, including the three above very questionable areas, we have reached the conclusion that for the best interest of the Missouri Pacific Railroad and our good neighbors located adjacent to our right-of-way that we should handle all movements of these materials in special train.

Missouri Pacific handles some 80 special trains per year and I do not recall a single incident or accident attributable to such handling. These movements for the most part involve loads

of either excess clearances or excess weight or both and are generally operated at speeds up to 35 mph.

Our decision to handle spent nuclear fuel cores and high level nuclear waste in special train movements is based upon the fact that experience clearly indicates this is the wisest way to handle the movement. Switching of the cask cars would be greatly minimized and the entire movement can be controlled much more safely than at the end of a 100 car train. By greatly reducing the mass of the entire train the locomotive engineer can carefully control speeds entering and leaving sidings, yard tracks, slow orders, etc. Also by virtue of the fact that there is no switching involved and the special train can accelerate and decelerate to and from the 35 mph limit much better than a long heavy freight train, the overall transit time is considerably reduced. Furthermore this relieves delay to all other cars in revenue train service and greatly reduces chance of the operating crews having to be relieved due to the Hours of Service Act (not to exceed 12 hours.)

In the event that there should be a derailment for any reason it has been my experience that speeds not exceeding 35 mph permit stopping the movement before the car gets too far from the track and sustains too much damage. Here again, the ability to closely monitor and control speed in a special train movement is very important. Most of these cars have three axles per truck which in itself is rather difficult to rerail should one or more wheel derail. In addition, the mass of these cars equals and in some cases exceeds that of our larger locomotives. Rerailing such heavy cars takes special railroad cranes of large capacity,

of which we only have two, and special off-track cranes which must be transported long distances to the scene of the derailment.

Obviously at the time of derailment it is necessary to immediately evacuate the area at least within a 1500 ft. radius and get assistance from ERDA and the shipper to monitor the area for any radioactivity spill. Presently the escort on DODX cars can monitor the area and therefore it is imperative that to quickly detect escape of radioactive material all spent nuclear fuel cars should be accompanied by an escort.

In the event of fire or rupture involving the cask it would be necessary to evacuate the area for several miles, especially on the leeward side and stop use of all potable water sources down stream until the scope of the contamination could be determined. In such event we could expect that our roadway in the immediate area would be out of service for a very long period of time. Rerouting of traffic could become very costly.

In no event could we commence wrecking operations until the area had been declared safe for the workmen and further that in case of minor contamination that the workmen had been given special clothing and instructions.

It is my opinion that the movement of both loaded and empty cars involved in handling irradiated spent nuclear cores from power stations and high level nuclear waste from reprocessing plants under the following conditions:

1. Must not be humped.
2. Must not be switched with locomotive detached.
3. Must be protected from undue impact after classification.

4. Must have one buffer car between locomotive and cask car.

5. Must have guard car with escort qualified to monitor for irradiation between cask car and caboose.

6. Road conductor must periodically contact escort enroute.

7. Shipment must be placed in clear of fouling point of all turnouts.

8. When meeting or passing other trains one train must be stopped and the other should proceed at not to exceed 35 mph.

9. Maximum speed restricted to 35 mph.

V E R I F I C A T I O N

State of Missouri)
) ss
County of St. Louis)

John G. German, being duly sworn, deposes and says that he has read the foregoing statement, knows the contents thereof, and that the same is true as stated.

John G. German

Subscribed and sworn to before me this 26th day of May, 1976.

R. C. Mason
Notary Public

My Commission Expires Sept 28 1978.

R. C. MASON, NOTARY PUBLIC
County of St. Louis, State of Missouri
My Commission Expires September 28, 1978
This act performed in the City of St. Louis, which adjoins the County of St. Louis in which I was commissioned.

DOCKET NUMBER
PROPOSED RULE PR-71,73 (41 FR 23768) (90)

MOVEMENT OF NUCLEAR FUEL CORES IN CASKS ON HEAVY-DUTY
SPECIALLY-EQUIPPED FLAT CARS
I.C.C. DOCKET NO. 36325

My Name is George R. Hanson, Manager Operations Planning in the Operating Department of the Chicago and North Western Transportation Company ("North Western"), with offices at 500 West Madison Street, Chicago, Illinois, 60606. My railroad service commenced in 1951 with the Chicago and North Western as a Trainman. Until April, 1959, I served as a Brakeman, Switchman and Conductor, working in major Terminals and on road trains. Since April 1, 1959, I have been Assistant Trainmaster, Trainmaster, Assistant Superintendent, Superintendent, and Division Manager. In 1974 I was appointed to my present position. In this position I am responsible for the identification of operations planning needs, both short and long-range, for the Operating Department, including the scheduling and blocking of freight trains on the North Western System. I am also Chairman of our railroad's Hazardous Commodity Committee, whose responsibility is to advise and recommend to our management procedures in connection with the safe and efficient handling and transportation of potentially hazardous materials.

It is the decision of the management of Chicago and North Western to move nuclear fuel cores in casks on heavy-duty specially-equipped flat cars in special train service.

The North Western operates approximately 110 road trains per day on its 9,996 miles of railroad in the states of Illinois, Iowa, Nebraska, North Dakota, South Dakota, Minnesota, Wisconsin, Wyoming, Kansas, Missouri, and Michigan. These road trains contain between 100 and 150 cars and operate at a speed of approximately 40-50 MPH. Maximum timetable speed on lines equipped with Automatic Block Signals or Automatic Train Control is 60 MPH; on other lines operated by use of Train Orders and Timetables the maximum speed is 49 MPH. North Western operates approximately 70 terminals where trains or cars are marshalled into road trains or interchange receipts and deliveries.

The North Western's main objectives in handling the heavy nuclear cores in special train service are as follows:

Safety to the public and North Western's employees.

A car or cars to be moved in a special train would receive a minimum amount of handling in our terminals. Upon receipt of a car or cars containing nuclear fuel cores from a connecting railroad, North Western would place a caboose and engine to such car(s) and immediately depart from the terminal. Except for a minimal number of crew change points, this special train would operate in straightaway main track service.

Example (actual): On January 18, 1976, North Western received three cars containing nuclear cores from the P-C Railroad at Proviso, Illinois, Yard. Having already received advanced information of the these cars, a crew was on duty upon arrival to handle the special train forward. The train departed Proviso at 11:08 P.M. enroute to Council Bluffs, Iowa, where it was delivered to the UP Railroad. The total lapsed time these three cars were on our railroad, that is, from receipt to delivery, was less than 16 hours. Conversely, if the same three cars were handled in regular train service, we would have received them from the P-C Railroad on their regular interchange transfer assignment. Prior to the delivery, these three cars would have received approximately 16-24 hours' terminal detention in the P-C Yard. This transfer would be delivered to us in our Receiving Yard (9), wherein our Car Department carefully inspects each car to determine the condition of the running gear of each car. Depending on traffic conditions in the yard, this transfer will be slated to be humped; that is, to be shoved over our automated hump into our Classification Yard (5). Due to the extreme weight and "Dangerous" placarding of the nuclear cores prior to the humping of this transfer, a switch engine would be dispatched to Yard 9 and switch them out and handle them specially

Crew Changes

around the hump to Holding Yard (4) or Yard (1), where they would be held for a train destined to Council Bluffs. Normally traffic received at Proviso receives over 24 hours' delay until it actually departs. This time is needed to inspect, hump and actually place in an outbound train. The special handling described could cause additional delay of up to another 24 hours. During the time the nuclear cars are at Proviso, they would be handled five or more times -- 1) by the delivering road, 2) by the switch crew assigned to switch them out of Transfer Yard 9, 3) by a special transfer crew to a holding yard, 4) to the train yard, or 5) to block into the designated train. Each time cars are handled in the terminal, the possibility of a derailment or accident exists. The probability of such occurrences increases with the number of times cars are handled. That is, the vast number of train and engine movements within the confines of the yard increase the potential of an accident such as collisions or sideswipes. We presently handle at Proviso over 7,000 cars, about 50 trains per day, and have 45 to 50 switch engine assignments. Again, the extreme weight of the nuclear cask cars increases the potential of a derailment due to the breaking under weight of a track or switch. I estimate normal delay at Proviso would be 30 to 48 hours. We presently have two trains per day to Council Bluffs -- No. 253 and No. 255. Inasmuch as No. 255 is a

high-speed manifest train handling TOFC, autos, etc., nuclear casks would have to be handled on No. 253. With the scheduled work enroute at various stations and terminals, No. 253's schedule from Proviso to Council Bluffs is 36 hours, 16 hours of which the train is at Boone, Iowa, a terminal where the train is reswitched and receives additional traffic from various trains throughout Iowa. Arrival at Council Bluffs to delivery to the UP would be approximately 8-10 hours. The same three nuclear casks which were handled in special train service in less than 16 hours on January 18 from Chicago to Council Bluffs, if handled in regular train service, would exceed 70 hours, based on a 24-hour or less delay at Proviso. The possibility of an accident again is increased due to operating in and out of various yards and switching operations. Another very important point in handling these cars in regular train service is that the more cars in a given train being pulled the more the involved cars are exposed to train dynamics, that is, the intertrain reaction which is caused by grade changes, the slowing down, stopping or accelerating of the train. Quite simply stated is the running in or out of the slack between the engine and caboose or the rocking side to side of certain cars over irregular tracks. This is not a new phenomena, however; the increase in train lengths, car sizes and loadings has caused railroads to become more alert to the increased

problems caused by dynamic train action. We have attributed many derailments to train dynamics. Obviously, train dynamics occurring in a two or three-car train is almost non-existent. Another equally important point in handling nuclear casks in special train service is the surveillance of the involved cars as they move across the railroad. During the entire trip our onboard train crews are able to devote their entire time observing the car(s) for mechanical defects which could develop enroute or other conditions which could jeopardize the safe movement of the train. In regular train service the above type of surveillance is not possible when one considers a train of 100 to 150 cars is over 1½ miles long and in-train mechanical failures are not readily noticeable to the head or rear end crew, particularly when they occur near the middle of the train. I have personally known many accidents where a derailed car in a train will be pulled for several miles undetected by the crew due to curves, weather or distance from the engine or caboose. In my opinion the nuclear casks handled in special train significantly increases the crew's ability to monitor the actual movement and thus detect any defects. In my 25 years of service in the Operating Department of the Chicago and North Western, I cannot recall one incident wherein a reportable accident has occurred when handling a car in special train service. This is very significant when we consider there

are almost 50 reportable train accidents per month on our railroad. Special trains are operated on the North Western quite frequently, not only in the case of the nuclear casks, but also in handling high value dimensional loads, certain explosives and poison gases, precision equipment and loads wherein the shipper requests special handling. Expensive containers such as the nuclear casks and specially designed rail cars are moved over the railroad many times faster when handled in special trains, sharply reducing the number required to perform the service. Turnaround time of special equipment and cars is generally a savings to the shipper.

As I have previously stated, the North Western does have accidents. Train derailments or wrecks involve any number of cars from one to fifty or more. Determining factors in the number of cars involved in an accident include speed of train, train consist (number of cars in train), track structure at point of derailment such as main track switches, and also the ability of the train crew to promptly note and take action to stop the train at the time the derailment occurs. Major derailments immediately place a route of our railroad out of service until the involved cars can be rerailed or cleared from the main track or tracks and the damaged track and roadbed rebuilt. This must be accomplished as promptly as possible,

as every lost hour a main track is obstructed results in several thousand dollars loss to our company -- similar to shutting down an assembly line in a large factory. Our work crews work around the clock until service is restored. If a car or cars of nuclear casks were involved in a major derailment, particularly if tipped over and disengaged from the rail car and/or other cars on top of the casks in a pile up, clearing operations could not commence until all procedures have been followed in connection with nuclear material involved in an accident. These procedures are found in the A.A.R. Bureau of Explosives Pamphlet No. 1. Briefly, the procedures state "Until the extent of the hazard can be determined, keep all persons the greatest practicable distance away." "Persons not properly protected against radiation shall not be permitted to approach the vicinity of any place where radioactive material is suspected to have been spilled." Protection of personnel will vary depending on circumstances and may consist solely of radiation monitoring. The North Western is not equipped, nor do we have trained personnel to monitor radioactivity. We would be required to leave our main line obstructed until assistance or further advice has been obtained from a competent authority. This authority most likely would be received from the nearest Atomic Energy Commission office, and it is quite evident that clearing operations could not commence until

"Orange Book"

qualified persons arrived on the scene, which I have been told could be as long as 48 hours. Fires often time accompany railroad wrecks. These fires stem from the many flammable materials we handle in train or from a burning wheel on a freight car. I personally know of fires that have burned for more than 24 hours in a pile up of wrecked cars, the burning flammable material igniting other cars in the area. If nuclear casks were involved, particularly if underneath a burning pile of railroad cars, serious complications could occur. In reviewing the design of the special flat cars used to transport LMFBR Spent Fuel Shipping Cask, I note the fixed refrigeration units attached to the car. These units are used to control the heat generated within the core of the spent fuel. In a major derailment involving one of these cars it is very likely that the refrigeration units would become unserviceable. The core would be without this protection until a replacement car could be found and the cask transferred. I estimate the time required to perform this work would be at least five days, or as long as 10 days, depending on the availability of a replacement car and its location; also, special transfer equipment. If the special car merely becomes derailed, the railroad involved is required to change out the wheels which were derailed; this is due to the roller bearing assemblies on each wheel. This would result in a minimum delay of three to five days.

Derailment would [illegible] heavy [illegible]

almost impossible to transfer at the scene

Railroads are constantly brought to criticism from the news media and public anytime an accident occurs in spite of the millions of miles of safe miles we operate daily. We work constantly to improve our safety records, particularly in the transportation of hazardous materials. Needless to say, if a derailment involving nuclear casks happens and is noted by the public or news media, the railroad involved would be subject to the public perception of the dangers in that particular situation, with the railroad probably receiving much unfavorable publicity and being the subject of much inquiry. Legislators, both in the Federal and State Governments, are daily adding new regulations and laws in connection with the transportation and handling of hazardous materials. As I stated at the beginning of this testimony, the North Western is insistent on handling nuclear cores in casks in special train service, thus doing everything possible to reduce the probabilities of an accident involving nuclear material.

GEORGE R. HANSON

STATE OF ILLINOIS)
) SS
COUNTY OF COOK)

GEORGE R. HANSON being duly sworn, deposes and says that he has read the foregoing statement, knows the contents thereof, and that the same are true as stated.

GEORGE R. HANSON

Subscribed and sworn to before me this 18 day of May, 1976.

Notary Public

My Commission Expires MY COMMISSION EXPIRES OCTOBER 17, 1976

DOCKET NUMBER
PROPOSED RULE PR-71,73 (41 FR 23768)

BEFORE THE

INTERSTATE COMMERCE COMMISSION

Lee p

No. 36325

RADIOACTIVE MATERIALS, SPECIAL TRAIN SERVICE, NATIONWIDE

AFFIDAVIT OF
H. L. LEWIS

My name is H. L. Lewis. I am employed by The Atchison, Topeka and Santa Fe Railway Company ("Santa Fe") as Superintendent of Transportation. My office address is Suite 902, 80 East Jackson Boulevard, Chicago, Illinois 60604.

I was first employed by Santa Fe at Chanute, Kansas in the year of 1940 in the position of mail clerk. Since then, I have held the positions of Transportation Inspector, Trainmaster, Assistant Superintendent and Superintendent before becoming Superintendent of Transportation in 1974.

Because of my vast operating experience over the past 36 years, I am intimately familiar with both regular train service and special train service as provided by the Santa Fe Railway and have set forth below several differences between the two types of service which relate to the safety of handling radioactive materials.

In my experience with the railroad, I have been aware of many train accidents involving trains in regular service. In my entire experience, however, I am not aware of any incident involving a derailment or damage to a car being handled by Santa Fe in special freight service. There are several reasons for this.

Even though our operating personnel do everything economically feasible to prevent accidents and to ensure the safety of the lading and personnel involved in regular train service, there is no way of guaranteeing that an accident will not occur. Accidents causing damage to railroad cars and the lading usually involve derailments or switching mishaps. Some factors which contribute to the rate of incidents or severity of any given incident are the train length, the amount of switching required, the speed of the train, the mixture of the lading contained in the train and the mixture of types of equipment in the train. Regarding each of these factors, there is an inherent safety advantage in special train service.

No authority need be cited for the proposition that higher speeds will result in more severe damage to train cars and lading if involved in an accident. In this respect, special train service has an advantage over regular train

service, since special trains handling nuclear materials would be limited to speeds of 35 m.p.h. while the speed of regular train service is dictated by the schedule and track conditions. Most of Santa Fe's main trunkline trackage is designed and maintained to handle freight train traffic at 70 m.p.h.

Train length also plays an important part both in the frequency of rail mishaps and the severity of such mishaps. For Santa Fe in the years of 1974 and 1975, the average length of its freight trains was approximately 52 and 56 cars respectively. In special train service, the length of trains would be substantially shorter, thereby reducing the length and weight factors which effect the frequency and severity of train derailments. As pointed out above, other important factors in comparing the safety of regular train service to special train service are the types of equipment in the train and the mixture of the lading.

Insofar as regular trains are concerned, they are assembled and handled in everyday operations. With few exceptions, cars handled in regular train service are assembled and handled from industries or interchanged from trains from other railroad lines and placed in our regular trains without

regard to location so far as the commodity is concerned. Generally, cars are gathered from various trains and switched onto other tracks by destination designation, then gathered by blocks and placed on a track where they are given mechanical inspections. Except for Class A explosives and open-top or flatcar loads, the shipper loads the car and closes the door, and therefore railroad personnel have no opportunity to inspect the lading or the method of loading. The consist of a regular train includes various lading commodities in different types of cars, some of which are railroad owned, some privately owned and some shipper owned.

The special trains handling nuclear casks, on the other hand, would consist of a few cars specifically selected and conditioned for that lading. Special handling means special attention being given to the movement and observation of the train by all personnel involved. In addition to being a much shorter train, there would not be mixed ladings and there would not be a variety of types of cars which could contribute to the frequency of accidents. Due to the train handling only the nuclear cask cars, there would be no switching or other yard handling in route, whereas with the normal or regular train it would be necessary to go into various yards to set out or pick up cars. These yard

operations would expose the cars to additional switching operations.

Special trains would also be subjected to fewer switching operations at destination or at an interline junction. If the destination is served by the road-haul carrier, all that would be done would be to set the buffer cars aside and shove the cask cars to the consignee. This would not involve switching as would be the case with a regular train and the car could be delivered with a minimum of handling. If the car were to go to an interline junction railroad, it would be set at the interchange and picked up from the interchange without a mix of other traffic. The effect of minimizing handling of the cars would be to increase safety of the movement.

Another factor contributing to the increased safety involved in handling cars in special train service is that all the cars on the train can be observed by both the head end and rear end crews at practically all times and at practically all locations. This is often not possible, however, with longer, regular trains because of curves, weather conditions and vegetation.

As an operating officer with more than 20 years' experience as a trainmaster and superintendent, I am extremely

concerned about the possible effect of a derailment involving a train handling radioactive material. I can foresee the panic that would exist if townspeople were advised that a nuclear incident had occurred in their vicinity. The repercussions created by an overzealous news media could stir the populous of a city or town to such an extent that operations in the future would be very questionable.

For these reasons, it is my firm belief that if we were to handle the material as potentially dangerous as nuclear casks of either initial material or spent material, we must do so in the safest possible manner. This should involve special train service which, in summary, provides the following safety advantages over regular train service:

a. Slower speeds

b. Fewer switching operations

c. Shorter and lighter trains

d. Similar commodities

e. Similar equipment

FURTHER AFFIANT SAYETH NOT.

VERIFICATION

STATE OF ILLINOIS)
) SS.
COUNTY OF COOK)

H. L. Lewis, being first duly sworn, on oath deposes and says that he has read the foregoing statement, knows the contents thereof, and that the same are true as stated.

H. L. Lewis

SUBSCRIBED and SWORN to before me this 25th day of May, 1976.

E. D. Gr[illegible]
Notary Public
MY COMMISSION EXPIRES JANUARY 14, 1977

CERTIFICATE OF SERVICE

I, Gary L. Crosby, hereby certify that I served a copy of the above Affidavit of H. L. Lewis on all parties of record in this proceeding by depositing a copy thereof in the United States Mail Box at 80 East Jackson Boulevard, Chicago, Illinois, proper postage prepaid, before 6:00 p.m. on the 25th day of May, 1976.

DOCKET NUMBER PROPOSED RULE PR-71.73 (41 FR 23768) (90) Ex. 12

VERIFIED STATEMENT

OF

FRED BEALER, JR.

My name is Fred Bealer, Jr., and I am Director of Transportation Operations for Union Pacific Railroad Company, headquartered at 1416 Dodge Street, Omaha, Nebraska, 68179. I have been employed by Union Pacific since 1959. My earlier positions with Union Pacific included Assistant Northwest District Car Distributor, Secretary to Northwest District General Manager, Secretary to Vice President Operations, Safety Agent-Nebraska Division, Trainmaster-Idaho Division, Assistant Superintendent-Kansas Division and Manager-DF Car Utilization.

In my present position as Director Transportation Operations, I have responsibility for general direction of train movement and equipment distribution as well as compliance with governmental regulations concerning equipment movement.

Four years of my railroad career involved traveling the entire Union Pacific system as Secretary to Vice President Operations. My duties included reviewing all accident reports. At no time was there ever an accident involving a special train. During my 17 years with the Union Pacific I have never seen nor heard of an accident involving a special train on my line. I requested that the Union Pacific accident reports in the Office of the Vice President-Operations be checked. There were no

reports of accidents involving special trains in those records which go back 13 years.

A special train usually consists of a locomotive, caboose and one or more cars requiring special handling. The speed allowed may vary and depends upon the nature of the handling required.

Special train service does not necessarily mean slower than regular service. In fact, it often provides faster service than regular train service. The reason for this is that special trains, because of their size, move through terminals faster than the longer trains. When they take sidings to meet other trains they can use many sidings which may be too short for regular trains. This feature reduces delays. Trains in special service can also reduce and pick up speed faster than regular trains. I know of instances where special train service was requested when faster than regular service was desired.

In my opinion, special train service is safer than regular train service. For one thing, if a defect in the equipment occurs, such as a hot box, it is more readily apparent to the crew because of the nearness. Also, a short train can stop more quickly than a longer train.

When a special train meets or is passed by a regular train, its speed is usually restricted or it is required to stop. The speed of the opposite or passing train may also be

restricted. This greatly reduces the severity of a potential accident.

A regular train usually travels over 50 MPH. Many select regular trains on the Union Pacific are operated at 70 MPH. The number of cars handled in a regular train will vary from 50 to 150 and the length of the trains will be anywhere from one mile to two miles long. The weight of these trains will average between 3000 and 10,000 tons. When a train of 100 cars traveling at 70 miles an hour derails, the combination of the speed and the weight of the train often results in upwards of 30 cars being derailed. The force exerted in the derailment is such that many of the cars frequently are totally demolished and the contents destroyed.

On the Union Pacific between Omaha, Nebraska, and Salt Lake City, Utah, there are two main tracks running side by side. Trains moving eastward use one main track and trains moving westward use the other. We have had accidents involving trains going in opposite directions, both of which were regular trains traveling at a high rate of speed and the results were particularly catastrophic.

As an operating officer, I have been at the scene of many train accidents. I have directed the clearing of wrecks and assisted at others. Some of these incidents have involved hazardous materials such as LPG gas, ammonia and phosphorous. Under these circumstances, it is required that the FRA, AAR,

the Bureau of Explosives, Environmental Protection Agency and the appropriate state and local officials be notified. Sometimes the FRA and the AAR will send experts to the wreck to direct.

If cars handling irradiated material were involved in a wreck and were derailed, or damaged, it would present a uniquely difficult problem for the railroad. I, personally, have had no experience in this field, nor do I know any operating railroaders who have. The weight of the empty cask in which the irradiated fuel elements are shipped on DODX cars moving into Scoville, Idaho, is more than 200,000 pounds, and holds 18,000 pounds of irradiated fuel elements. If such a car were derailed, it could present a formidable task in rerailing. I have seen LPG gas cars rolled down an embankment. If this occurred with a DODX car containing irradiated fuel, or even with the empty cask containing residual radioactivity, (why?) it would be a time consuming and dangerous situation to clear. There is also the possibility the car could be drailed into a river or lake. Through the State of Nebraska, Highway 30 generally parallels Union Pacific's main line and many portions of the interstate as well as other highways and roads are adjacent to the railroad. At other locations, Union Pacific's tracks run adjacent to tracks of other railroads and sometimes cross them. Union Pacific tracks also are in the proximity of airports such as Stapleton in Denver, and McCarran

Field in Las Vegas. An accident involving a car containing radioactive material at any of these locations could conceivably cause considerable interference with interstate commerce. If the cask should leak as a result of the derailment, there would be the problem of contamination, hazard of deaths and personal injury. I have been at derailments where the forces exerted have caused rails to be torn from the track and thrust through railroad cars. There is always the possibility of a rail impaling an irradiated fuel container. Even if there were no emission of radioactive products, there would be considerable delay in clearing the railroad or highways for operation because of various environmental and regulatory features. Why?

I do not know what the full impact would be if there were leakage from a car containing irradiated fuel, or an empty car containing residual radioactivity, but apparently there would be long-term repercussion. For example, Westinghouse receives shipments of irradiated fuel and radioactive waste material at Scoville, Idaho, and is in frequent contact with our Freight Agent nearby at Arco. On August 22, 1975, our Freight Agent received a telephone call from a Westinghouse representative, Mr. Herb Paulson, who advised that a DODX car in the Scoville plant had become contaminated by leakage. He further advised that the car would be unavailable for further use since it was going to be buried.

Described as dangerous by ALJ, first left in

The DODX car was a heavy-duty depressed-center flat car with a permanently attached cask for transportation of spent nuclear fuel cores. The cask and car combined had an empty weight of about 335,000 pounds. The cask alone, when empty, weighed about 225,000 pounds.

The Arco Agent on March 5, 1976, contacted Mr. Paulson to inquire into the cause of this incident but was only informed that the cask and bed of car had been contaminated but that the wheels had not. Mr. Paulson stated that after Westinghouse had received some "inquiries from the East" on the previous day he had been told not to discuss the incident or give out any further information.

In my opinion, handling cars containing irradiated fuel elements, or empty casks which have residual radioactivity, in special train service, would reduce the possibility of an accident, as well as the severity of an accident, if any occurred.

VERIFICATION

STATE OF NEBRASKA)
) SS
COUNTY OF DOUGLAS)

FRED BEALER, JR., being duly sworn, deposes and says that he has read the foregoing statement, knows the contents thereof, and that the same are true as stated.

Fred Bealer Jr.
FRED BEALER, JR.

Subscribed and sworn to before me this 25th day of Ma[illegible]

J. F. Harness
NOTARY PUBLIC

My Commission Expires June 8, 1979.

I.C.C. DOCKET NO. 36325
VERIFIED STATEMENT OF HARVEY H. BRADLEY

My name is Harvey H. Bradley. I am Vice President Transportation, Southern Railway Company. I graduated from Virginia Military Institute at Lexington, Virginia, in 1949 with a Bachelor of Science degree in Civil Engineering. I have been employed by Southern Railway since August, 1949, except for two years in the Army during the Korean War. During that time I have held the positions of Student Apprentice; Assistant Supervisor; Track Supervisor; Bridge and Building Supervisor; Assistant Trainmaster; Trainmaster (4 locations), Division Superintendent (3 locations) General Manager Transportation; Assistant Vice President-Safety, Assistant Vice President-Transportation, and Vice President-Transportation.

I understand that this proceeding is concerned with the question of whether or not shipments of irradiated fuel elements and radioactive waste material should be confined to special trains. My knowledge of the commodities involved is rather limited and comes mainly from various government publications. I am advised that the shipping casks may

weigh in excess of 100 tons and must be continually cooled. A booklet published by the Energy Research and Development Administration (ERDA), Atoms on the Move: Transporting Nuclear Material (1975) states, on p. 37:

> "If cooling equipment associated with a cask of spent fuel were put out of commission in a highway accident, for instance, the heat of normal radioactive decay would cause the cask's temperature to climb. Calculations show that it might rise to as much as 700°F, in fact, but there would be no danger of melting the cask wall itself."

Another government publication, Environmental Survey of Transportation of Radioactive Materials to and From Nuclear Power Plants. (WASH-1238) prepared by the Atomic Energy Commission in 1972, states, on p. 83:

> "In one design of rail cask now under evaluation (GE, IF-300), complete failure of the external cooling system will cause the cask to overheat over a period of several hours. In that case, under certain adverse but unlikely conditions, the temperature of 50% of the fuel elements would reach 1200°F, which could cause perforation of the cladding on some of the rods if the elements were of the present PWR type."

and on p. 85:

> "Some designs of rail casks have an external mechanical cooling system. An accident may cause moderate damage to the cask such that the mechanical cooling system becomes inoperative. If no corrective action is taken and the ambient temperature is above 100°F, the temperature of the fuel in the cask will increase enough in a few hours to cause an overpressure in the cask cavity, and some of the coolant will be released through the vent system. This also may occur in some cask designs if the cask is involved in a severe fire.
>
> "Venting may occur in a series of releases; one design permits about 5% of the gas in the cask cavity to be released at a time."

In a serious train accident there is frequently compression and telescoping of the train, with a tendency for the cars to pile up and for lighter cars to ride up over heavier cars. In a pileup of mixed freight, a 100 ton cask of irradiated fuel elements would quite likely be at the bottom, with its cooling system out of operation. If the cars on top of it contained inflamable freight, and the cask reached a surface temperature of 700°F (going up toward an interior temperature of 1,200°F) the cask would <u>start</u> a fire.

Since the kindling point of paper is 300°F to 350°F, the placards warning of the radioactive nature of the shipment would burn off before the cask reached a temperature of 700°F.

The concurrent venting of radioactive gases would seriously interfere with efforts to fight the fire and remove the wrecked cars, and it could easily take several days to clear the wreckage, cool down and remove the cask, and clear the railroad right of way.

All this is assuming that no fuel elements were released from the cask in the train wreck. In this regard the AEC publication quoted above states, on page 87:

> "If seven irradiated fuel elements were released from a cask in an unusual accident, the radiation level at 100 feet could be as much as 10^4 r/hr. Assuming the fuel elements remained unshielded for 10 hours, approximately 30,000 persons within a mile radius (based on 10^4 persons/square mile) might receive a cumulative dose of about 1000 man-rem. If a person remained unshielded at an average distance of 100 feet from the fuel elements for 6 minutes, he might receive a dose of as much as 1000 rem. Persons remaining near the exposed fuel for any appreciable length of time may receive large doses of radiation. Someone at a distance of 10 feet from the exposed fuel for about a minute, would receive a dose of 1000 rem. Remote equipment would be required to erect a shield around the fuel elements or to place them in a shielded box or to repackage them.

I am advised that a dose of 500 rem is likely to be fatal.

I have assisted in or supervised clearing the tracks and restoring train service after many accidents, but have never been faced with the conditions that appear likely to result from a serious accident involving a shipment of irradiated fuel elements moving along with other freight of all kinds in general freight train service.

The AEC publication quoted above also stated , on p. 86:

> "The likelihood of a cask remaining unattended after loss of mechanical cooling . . . can be reduced by appropriate administrative controls such as escorts, alarming the mechanical cooling system, inspection of the shipment at regular intervals, and notification of the shipper in case of any failure of mechanical cooling or involvement in an accident."

In this connection the technical description of the General Electric IF-300 irradiated fuel shipping cask states, on page 16:

> "The IF 300 cask is equipped with an audible alarm system. System activation occurs if the cask temperature exceeds a predetermined value. This indicates either the failure of the cooling system or a loss of water from the external water jacket.
>
> "Transportation personnel, railroad or highway, will be given adequate training to respond to this

alarm. A procedures and notification manual will accompany each shipment."

The problem is that, as will be shown hereafter, in a general train of mixed freight no one would ordinarily be available to hear the alarm or to check the cask at regular intervals.

The technical description of the General Electric IF-300 irradiated fuel shipping cask describes four tests that the cask passed. These are the four tests required for all irradiated fuel shipping casks (10 CFR §71.64, Appendix B) and are as follows:

1. A 30-foot free fall onto a flat unyielding surface. This produces a speed on impact of 30 mph. However, in actual train wrecks impact speeds of more than 30 mph are not unusual. In general freight train service speeds of 60 mph are common, and when two 60 mph trains pass, going in opposite directions, the rate of closure is 120 mph. Anything protruding from, or falling off of, one train and striking a cask on the other train would have a speed on impact of 120 mph.

For this reason Southern has operating instructions requiring shipments of irradiated fuel and radioactive waste to be moved at speeds not exceeding 35 mph, and when two trains pass in opposite directions, one train must stop while the other train proceeds at not more than 35 mph. Thus the impact speed in any accident cannot be much greater than the 30 mph for which the casks are tested. However, from an operating standpoint it is not practical to maintain these speed controls unless the shipments are handled in special train service.

2. A 40 inch free fall onto a steel bar 6 inches in diameter. According to the General Electric technical

manual mentioned above, this test is intended to simulate the end of a railroad rail. The intent is good, because accidents in which cars and their freight impale themselves on broken rails are not uncommon. Ordinarily we do not keep separate records of such incidents, but when a broken rail pierces a fuel tank and spills diesel fuel, the resulting pollution problem attracts attention. Therefore I was able to determine that last year we had six fuel spills caused by tanks being punctured by broken rails. However, the 40 inch drop test produces an impact speed of only about 10 mph, and in regular train service a cask of irradiated fuel elements could run up against the end of a broken rail at 50 or 60 mph. A quarter mile long section of rail, spiked in place throughout its length, comes close to being an immovable object.

3. Thirty minutes in a 1,475°F fire. Fires are not uncommon in railroad accidents, and although the temperatures probably seldom exceed 1,475°F, the duration frequently exceeds half an hour. I can recall a three month period during which we had three fires on Southern that lasted more than 24 hours.

4. Immersion under 3 feet of water for 8 hours. If a car carrying a cask of irradiated fuel elements should derail on a bridge or trestle, it is quite likely that the cask would end up under more than 3 feet of water, and considering the weight of the cask and the difficulty of conducting recovery operations from a bridge or a trestle it is most likely that the cask would not be removed from the water within eight hours.

The tests that the casks are required to undergo

would be far exceeded by the actual circumstances of many railroad accidents.

Since 1965, as part of my job, I have received daily reports of all train accidents on Southern Railway System. Movements of special trains are very carefully monitored, and any accident involving such a train would of course attract immediate attention. It is my conclusion that special trains simply do not become involved in serious accidents.

Specifically, during the 5-year period 1970-1974 Southern had an average of 357 reportable accidents (involving $750 or more damage) per year and an average of 2,892 accidents per year that were not reportable under the standards set by the Federal Railroad Administration. For 1975 the standards were changed so that accidents involving less than $1,750 were not reportable, and during that year Southern had 273 reportable accidents and 3,489 minor (non-reportable) accidents.

During this entire period of time Southern had only one accident involving a special train. On October 12, 1975 a special [illegible] by flatcar carrying an unbalanced load climbed the rail on a curve and derailed at 22 miles per

hour, doing minor damage to the track and cars; no damage to the lading and no injuries. This unusual accident was caused by the heavy, unbalanced load, but since it was a special train it was under constant close surveillance and could be stopped quickly.

Regular freight trains are often more than a mile long, so long that on curves a particular car will frequently be out of sight of either the engine or the caboose, and sometimes cars will be out of sight of both. If a car should derail or have some other accident at such a time, no one would know about the accident, or try to stop the train, until some time later. Furthermore, regular freight trains frequently weigh so much that, at a speed of 60 mph, it may take more than half a mile to stop.

On the other hand special trains consist of only a few cars and are so short that every car is under constant surveillance from both the engine and the caboose. This, combined with the slower speeds at which special trains operate and the special care with which they are handled, accounts for the fact that in my experience special trains are never involved in serious accidents and are rarely

involved in any accidents at all. Furthermore, if a special train should derail, the slower speed and shorter length (lower total weight of the entire train) would enable the crew to stop the train almost at once, before the cars could turn over or pile up. This would greatly simplify checking the cars for damage. Clearing the track would not be as much of a problem because there would not be a pile of wreckage to clear away.

The slower speed, shorter stopping distance and shorter length of a special train also greatly reduces the likelihood of a crossing accident.

The use of special trains will also give quicker, more dependable service and quicker turn-around time, allowing better utilization of the special casks and cars. Although the irradiated fuel elements would only move at a maximum speed of 35 mph, in a special train the shipment would move right on through from origin to destination. For example, it would take a shipment less than 10 hours to move from the power plant at Newport, S.C. to the reprocessing plant at Barnwell, S.C.

in special train service, and arrangements could be made for the shipment to leave Newport as soon as it was loaded, without waiting for the next outbound train.

On the other hand if the shipment moved in regular train service, it would leave Newport on train 85 at 6:00 p.m. (which might be 23 hours after the cask was loaded and ready to move) and would arrive at Rock Hill, S.C. at 6:30. Then it would leave Rock Hill on train 185 at 2:00 p.m. the following day and would arrive at Columbia, S.C. at 5:00 p.m. The day after that it would leave Columbia at 7:00 a.m. on train 97 and would arrive at Barnwell at 11:00 a.m. and be interchanged to SCL. SCL's local train would pick the car up at Barnwell at 9:00 a.m. the next day and deliver it to the reprocessing plant at 9:45 a.m. That is, if the car left Newport at 6:00 p.m. on Monday it would be scheduled for delivery at Barnwell at 9:45 on Thursday, in regular train service.

VERIFICATION

DISTRICT OF COLUMBIA) ss:

HARVEY H. BRADLEY, being duly sworn, deposes and says that he has read the foregoing statement, knows the contents thereof, and that the same are true as stated.

HARVEY H. BRADLEY

Subscribed and sworn to before me this 24th day of May, 1976.

LAWRENCE A. HUFF
NOTARY PUBLIC
IN AND FOR THE DISTRICT OF COLUMBIA
MY COMMISSION EXPIRES JUNE 30, 1977