AmerGen

AmerGen Energy Company, LLC
Three Mile Island Unit 1
Route 441 South, P.O. Box 480
Middletown, PA 17057

Telephone: 717-944-7621

An Exelon/British Energy Company

April 17, 2002
5928-02-20095

U. S. Nuclear Regulatory Commission
Washington, DC 20555

Attn: Document Control Desk

SUBJECT: THREE MILE ISLAND NUCLEAR STATION UNIT 1 AND UNIT 2
OPERATING LICENSE NO. DPR-50 AND POSSESSION ONLY LICENSE NO. DPR 73
DOCKET NOS. 50-289 AND 50-320
COMBINED 2001 ANNUAL RADIOACTIVE EFFLUENT RELEASE REPORT

The Annual Radioactive Effluent Release Report required by TMI-1 Technical Specification 6.9.4.1, TMI-2 Technical Specifications 6.8.1.2, and 6.12, and the Off-Site Dose Calculation Manual Part 4, Section 2.1 is enclosed.

Attachment 1 contains a summary of the quantities of radioactive liquid and gaseous effluents released from the site as outlined in Reg. Guide 1.21, Rev. 1, with data summarized on a quarterly basis following the format of Appendix B thereof.

Attachment 2 contains information for each type of solid waste shipped offsite during the report period including the container volume, total curie quantity (specified as determined by measurement or estimate), principal radionuclides (specified as determined by measurement or estimate), type of waste, type of shipment and solidification agent(s).

Attachment 3 includes a summary of unplanned releases from the site to unrestricted areas of radioactive materials in gaseous and liquid effluents made during the reporting period.

Attachment 4 describes any changes made during 2001 to the Process Control Program (PCP) documents or to the Offsite Dose Calculation Manual (ODCM) and a listing of new locations for dose calculations and/or environmental monitoring identified by the land use census pursuant to Part 3, Section 8.2 of the ODCM.

Attachment 5 reports all instrumentation not returned to operable status within 30 days per the TMI ODCM Part 1, Sections 2.1.1.b and 2.1.2.b and Part 2, Section 2.1.2.b.

Attachment 6 is an annual summary of hourly meteorological data collected for 2001 in the form of joint frequency distribution of wind speed, wind direction and atmospheric stability.

IE48
A009

Attachment 7 is an assessment of the radiation doses due to the radioactive liquid and gaseous effluents released from the respective unit during 2001.

Attachment 8 is an assessment of the radiation doses from the radioactive liquid and gaseous effluents to members of the public due to their activities inside the site boundary during 2001.

Attachment 9 is an assessment of the radiation doses to the likely most exposed real individual from reactor releases and other nearby uranium fuel cycle sources including doses from primary effluent pathways and direct radiation for 2001.

Attachment 10 is a summation of deviations from the sampling and analysis regime specified in the ODCM for TMI-1 and TMI-2.

Enclosure 1 is a copy of the TMI Offsite Dose Calculation Manual (ODCM), revision 22, which was current as of December 31, 2001. There were two revisions made to the ODCM during 2001. Revision 21 was issued on January 19, 2001 and revision 22 was issued on May 4, 2001.

Enclosure 2 is a copy of the procedure change request that modified the ODCM from revision 20 to 21.

Enclosure 3 is a copy of the procedure change request that modified the ODCM from revision 21 to 22.

Please contact Adam Miller of TMI-1 Regulatory Assurance at 717-948-8128 if you have any questions concerning this report.

Sincerely,

George H. Gellrich
Plant Manager

GHG/awm

Attachments/Enclosures

cc: Region 1 Administrator
TMI Senior Resident Inspector
TMI-1 Senior Project Manager
TMI-2 Project Manager
GPU Nuclear Cognizant Officer

Attachment 1
2001 Annual Radioactive Effluent Releases Report for TMI
5928-02-20095

Summary of Radioactive Liquid and Gaseous Effluents Released from TMI during 2001

TABLE 1A
EFFLUENT AND WASTE DISPOSAL ANNUAL REPORT
GASEOUS EFFLUENTS-SUMMATION OF ALL RELEASES
TMI-1

	UNITS	2001 1ST QUARTER	2001 2ND QUARTER	2001 3RD QUARTER	2001 4TH QUARTER	EST. TOTAL ERROR %
A. FISSION AND ACTIVATION GASES						
1. TOTAL RELEASE	Ci	2.8E-01	5.7E-01	1.1E+00	1.7E+00	25%
2. AVERAGE RELEASE RATE FOR PERIOD	uCi/sec	3.5E-02	7.3E-02	1.4E-01	2.1E-01	
3. PERCENT OF TECH SPEC LIMIT	%	*	*	*	*	
B. IODINES						
1. TOTAL IODINE I-131	Ci	8.8E-07	7.3E-07	1.7E-07	1.1E-07	25%
2. AVERAGE RELEASE RATE FOR PERIOD	uCi/sec	1.1E-07	9.3E-08	2.1E-08	1.3E-08	
3. PERCENT OF TECH SPEC LIMIT	%	*	*	*	*	
C. PARTICULATES						
1. PARTICULATES WITH HALF-LIVES > 8 DAYS	Ci	7.4E-06	<1.E-04	4.6E-08	1.2E-09	25%
2. AVERAGE RELEASE RATE FOR PERIOD	uCi/sec	9.5E-07	NA	5.8E-09	1.5E-10	
3. PERCENT OF TECH SPEC LIMIT	%	*	*	*	*	
4. GROSS ALPHA RADIOACTIVITY	Ci	<1.E-11	<1.E-11	2.2E-08	<1.E-11	
D. TRITIUM						
1. TOTAL RELEASE	Ci	9.6E+00	2.4E+01	2.9E+01	7.7E+01	25%
2. AVERAGE RELEASE RATE FOR PERIOD	uCi/sec	1.2E+00	3.1E+00	3.6E+00	9.7E+00	
3. PERCENT OF TECH SPEC LIMIT	%	*	*	*	*	

* % ODCM LIMITS: LISTED ON DOSE SUMMARY TABLE
NOTE: ALL LESS THAN (<) VALUES ARE IN uCi/ml

TABLE 2A
EFFLUENT AND WASTE DISPOSAL ANNUAL REPORT
LIQUID EFFLUENTS-SUMMATION OF ALL RELEASES
TMI-1

	UNITS	2001 1ST QUARTER	2001 2ND QUARTER	2001 3RD QUARTER	2001 4TH QUARTER	EST. TOTAL ERROR %
A. FISSION AND ACTIVATION PRODUCTS						
1. TOTAL RELEASES (NOT INCLUDING TRITIUM, GASES, ALPHA)	Ci	4.1E-05	3.4E-03	6.1E-04	3.9E-03	25%
2. AVERAGE DILUTED CONCENTRATION DURING PERIOD	uCi/ml	7.7E-12	5.0E-10	9.3E-11	5.0E-10	
3. PERCENT OF APPLICABLE LIMIT	%	*	*	*	*	
B. TRITIUM						
1. TOTAL RELEASE	Ci	1.0E+02	1.6E+02	2.0E+02	3.1E+01	25%
2. AVERAGE DILUTED CONCENTRATION DURING PERIOD	uCi/ml	1.8E-05	2.4E-05	3.0E-05	4.0E-06	
3. PERCENT OF APPLICABLE LIMIT	%	*	*	*	*	
C. DISSOLVED AND ENTRAINED GASES						
1. TOTAL RELEASE	Ci	<1.E-04	1.2E-01	3.5E-06	<1.E-04	25%
2. AVERAGE DILUTED CONCENTRATION DURING PERIOD	uCi/ml	NA	2.E-08	5.E-13	NA	
3. PERCENT OF APPLICABLE LIMIT	%	*	*	*	*	
D. GROSS ALPHA ACTIVITY						
1. TOTAL RELEASE	Ci	<1.E-07	<1.E-07	<1.E-07	<1.E-07	25%
E. VOLUME OF WASTE RELEASED (PRIOR TO DILUTION)	liters	7.6E+06	1.2E+07	1.0E+07	9.2E+06	10%
F. VOLUME OF DILUTION WATER USED	liters	5.3E+09	6.8E+09	6.6E+09	7.9E+09	10%

* % ODCM LIMITS: LISTED ON DOSE SUMMARY TABLE
NOTE: ALL LESS THAN (<) VALUES ARE IN uCi/ml

TABLE 2B
EFFLUENT AND WASTE DISPOSAL ANNUAL REPORT (2001)
LIQUID EFFLUENTS
TMI-1

		CONTINUOUS		BATCH		CONTINUOUS		BATCH	
NUCLIDES RELEASED	UNIT	QUARTER 1	QUARTER 2	QUARTER 1	QUARTER 2	QUARTER 3	QUARTER 4	QUARTER 3	QUARTER 4
CR 51	Ci	<5 E-07	<5 E-07	<5 E-07	<5 E-07	<5 E-07	<5 E-07	<5.E-07	<5.E-07
MN 54	Ci	<5 E-07	<5 E-07	<5 E-07	<5 E-07	<5 E-07	<5 E-07	<5.E-07	<5.E-07
FE 59	Ci	<5 E-07	<5 E-07	<5 E-07	<5 E-07	<5 E-07	<5 E-07	<5.E-07	<5.E-07
CO 58	Ci	<5 E-07	<5 E-07	<5 E-07	<5 E-07	<5 E-07	1.8E-05	<5.E-07	<5.E-07
CO 60	Ci	<5 E-07	<5 E-07	<5 E-07	<5 E-07	<5 E-07	<5 E-07	<5.E-07	<5.E-07
ZN 65	Ci	<5 E-07	<5 E-07	<5 E-07	<5 E-07	<5 E-07	<5 E-07	<5.E-07	<5.E-07
SR 89	Ci	<5 E-08	<5 E-08	<5 E-08	<5 E-08	<5 E-08	<5 E-08	<5 E-08	<5 E-08
SR 90	Ci	<5 E-08	<5 E-08	3.9E-07	2.4E-06	5.1E-07	1.4E-07	2.6E-06	1.1E-06
ZR 95	Ci	<5 E-07	<5 E-07	<5 E-07	<5 E-07	<5 E-07	<5 E-07	<5 E-07	<5 E-07
NB 95	Ci	<5 E-07	<5 E-07	<5 E-07	<5 E-07	<5 E-07	<5 E-07	<5 E-07	<5 E-07
MO 99	Ci	<5 E-07	<5 E-07	<5 E-07	<5 E-07	<5 E-07	<5 E-07	<5 E-07	<5 E-07
TC 99M	Ci	<5 E-07	<5 E-07	<5 E-07	<5 E-07	<5 E-07	<5 E-07	<5 E-07	<5 E-07
I 131	Ci	<1 E-06	<1 E-06	<1 E-06	<1 E-06	<1 E-06	<1 E-06	<1 E-06	<1 E-06
CS 134	Ci	<5 E-07	1.9E-04	<5 E-07	<5 E-07	<5 E-07	9.0E-05	<5 E-07	<5 E-07
CS 137	Ci	3.6E-05	3.2E-03	4.7E-06	1.8E-05	5.7E-05	3.8E-03	4.2E-05	2.5E-05
BA 140	Ci	<5 E-07	<5 E-07	<5 E-07	<5 E-07	<5 E-07	<5 E-07	<5 E-07	<5 E-07
LA 140	Ci	<5 E-07	<5 E-07	<5 E-07	<5 E-07	<5 E-07	<5 E-07	<5 E-07	<5 E-07
CE 141	Ci	<5 E-07	<5 E-07	<5 E-07	<5 E-07	<5 E-07	<5 E-07	<5 E-07	<5 E-07
FE 55	Ci	<1 E-06	<1 E-06	<1 E-06	<1 E-06	<1 E-06	<1 E-06	5.1E-04	<1 E-06
TOTAL FOR PERIOD	Ci	3.6E-05	3.4E-03	5.1E-06	2.0E-05	5.8E-05	3.9E-03	5.5E-04	2.6E-05
XE 133	Ci	<1.E-04	<1.E-04	<1.E-04	1.2E-01	<1.E-04	<1.E-04	1.8E-06	<1.E-04
XE 135	Ci	<1.E-04	<1.E-04	<1.E-04	<1.E-04	<1.E-04	<1.E-04	1.6E-06	<1.E-04

NOTE: ALL LESS THAN VALUES (<) ARE IN uCi/ml

TABLE 1C
EFFLUENT AND WASTE DISPOSAL ANNUAL REPORT (2001)
GASEOUS EFFLUENTS - GROUND LEVEL RELEASES
TMI-1

		CONTINUOUS		BATCH		CONTINUOUS		BATCH	
NUCLIDES RELEASED	UNIT	QUARTER 1	QUARTER 2	QUARTER 1	QUARTER 2	QUARTER 3	QUARTER 4	QUARTER 3	QUARTER 4
1. FISSION GASES									
AR 41	Ci	<3 E-07	<3 E-07	1.2E-02	3.7E-02	<3 E-07	<3 E-07	1.2E-01	1.2E-01
KR 85M	Ci	<5 E-08	<5 E-08	<5 E-08	<5 E-08	<5 E-08	<5 E-08	<5 E-08	3.0E-05
KR 85	Ci	<2 E-05	<2 E-05	2.2E-01	3.9E-01	<2 E-05	<2 E-05	2.2E-02	5.3E-03
KR 87	Ci	<1 E-07	<1 E-07	<1 E-07	<1 E-07	<1 E-07	<1 E-07	<1 E-07	<1 E-07
KR 88	Ci	<2 E-07	<2 E-07	<2 E-07	<2 E-07	<2 E-07	<2 E-07	<2 E-07	<2 E-07
XE131M	Ci	<1E-6	<1E-6	<1E-6	<1E-6	<1E-6	<1E-6	<1E-6	8.8E-03
XE 133	Ci	<2 E-07	<2 E-07	4.4E-02	1.5E-01	<2 E-07	<2 E-07	4.5E-01	1.5E+00
XE133M	Ci	<3 E-7	<3 E-7	<3 E-7	<3 E-7	<3 E-7	<3 E-7	<3 E-7	9.5E-03
XE 135M	Ci	<5 E-07	<5 E-07	<5 E-07	<5 E-07	<5 E-07	<5 E-07	<5 E-07	<5 E-07
XE 135	Ci	<5 E-08	2.2E-04	<5 E-08	<5 E-08	5.5E-01	<5 E-08	7.4E-03	2.1E-05
XE 138	Ci	<5 E-07	<5 E-07	<5 E-07	<5 E-07	<5 E-07	<5 E-07	<5 E-07	<5 E-07
TOTAL FOR PERIOD	Ci	NA	2.2E-04	2.8E-01	5.7E-01	5.5E-01	NA	5.9E-01	1.6E+00
2. IODINES									
I 131	Ci	6.7E-07	3.7E-07	2.1E-07	3.6E-07	1.7E-07	1.1E-07	<1 E-08	<1 E-08
I 133	Ci	5.9E-06	1.7E-06	5.8E-08	1.1E-07	6.2E-08	6.3E-06	<1 E-08	<1 E-08
TOTAL FOR PERIOD	Ci	6.5E-06	2.1E-06	2.7E-07	4.7E-07	2.3E-07	6.4E-06	NA	NA
3. PARTICULATES									
C0 58	Ci	<1 E-11	<1 E-11	<1 E-08	<1 E-08	<1 E-11	1.2E-09	<1 E-08	<1 E-08
CS 137	Ci	7.4E-06	<1 E-11	<1 E-08	<1 E-08	<1 E-11	<1E-11	4.6E-08	<1 E-08

NOTE: ALL LESS THAN VALUES (<) ARE IN uCi/ml

SUPPLEMENTAL INFORMATION

FACILITY: TMI UNIT 1 LICENSE: DPR 50-289

1. REGULATORY LIMITS - - - REFER TO TMI OFFSITE DOSE CALCULATION MANUAL

A. FISSION AND ACTIVATION GASES:
B. IODINES:
C. PARTICULATES, HALF-LIVES > 8 DAYS:
D. LIQUID EFFLUENTS:

2. MAXIMUM EFFLUENT CONCENTRATIONS - - - TEN TIMES 10 CFR 20, APPENDIX B TABLE 2

PROVIDE THE MAXIMUM EFFLUENT CONCENTRATIONS USED IN DETERMINING ALLOWABLE RELEASE RATES OR CONCENTRATIONS.

A. FISSION AND ACTIVATION GASES:
B. IODINES:
C. PARTICULATES, HALF-LIVES > 8 DAYS:
D. LIQUID EFFLUENTS:

3. AVERAGE ENERGY

PROVIDE THE AVERAGE ENERGY (E-BAR) OF THE RADIONUCLIDE MIXTURE IN RELEASES OF FISSION AND ACTIVATION GASES, IF APPLICABLE

E-BAR BETA =	2.95E-01
E-BAR GAMMA =	4.37E-01
E-BAR BETA AND GAMMA =	7.32E-01

4. MEASUREMENTS AND APPROXIMATIONS OF TOTAL RADIOACTIVITY

PROVIDE THE METHODS USED TO MEASURE OR APPROXIMATE THE TOTAL RADIOACTIVITY IN EFFLUENTS AND THE METHODS USED TO DETERMINE RADIONUCLIDE COMPOSITION:

A. FISSION AND ACTIVATION GASES: HPGE SPECTROMETRY, LIQUID SCINTILLATION
B. IODINES: HPGE SPECTROMETRY
C. PARTICULATES HPGE SPECTROMETRY, GAS FLOW PROPORTIONAL, BETA SPECTROMETRY
D. LIQUID EFFLUENTS: HPGE SPECTROMETRY, LIQUID SCINTILLATION

5. BATCH RELEASES

PROVIDE THE FOLLOWING INFORMATION RELATING TO BATCH RELEASES OF RADIOACTIVITY MATERIALS IN LIQUID AND GASEOUS EFFLUENTS.

A. LIQUID (ALL TIMES IN MINUTES)	QUARTER 1	QUARTER 2	QUARTER 3	QUARTER 4
1. NUMBER OF BATCH RELEASES:	16	15	32	17
2. TOTAL TIME PERIOD FOR BATCH RELEASES:	4127	4082	8634	4512
3. MAXIMUM TIME PERIOD FOR A BATCH RELEASE:	565	347	332	290
4. AVERAGE TIME PERIOD FOR BATCH RELEASES:	257	272	269	265
5. MINIMUM TIME PERIOD FOR A BATCH RELEASE:	66	240	235	240
6. AVERAGE STREAM FLOW DURING PERIODS OF RELEASE				
OF EFFLUENT INTO A FLOWING STREAM: (CFM)	2.2E+06	2.3E+06	4.2E+05	7.1E+05

B. GASEOUS (ALL TIMES IN MINUTES)				
1. NUMBER OF BATCH RELEASES:	3	3	4	18
2. TOTAL TIME PERIOD FOR BATCH RELEASES:	1536	2196	1916	85643
3. MAXIMUM TIME PERIOD FOR A BATCH RELEASE:	785	1260	1000	68571
4. AVERAGE TIME PERIOD FOR BATCH RELEASES:	512	732	479	4757
5. MINIMUM TIME PERIOD FOR A BATCH RELEASE:	24	106	6	15

6. ABNORMAL RELEASES

A. LIQUID				
1. NUMBER OF RELEASES:	-0-	-0-	-0-	-0-
2. TOTAL ACTIVITY RELEASED: (CURIES)	N/A	N/A	N/A	N/A
B. GASEOUS				
1. NUMBER OF RELEASES:	-0-	-0-	-0-	-0-
2. TOTAL ACTIVITY RELEASED: (CURIES)	N/A	N/A	N/A	N/A

TABLE 1A
EFFLUENT AND WASTE DISPOSAL ANNUAL REPORT
GASEOUS EFFLUENTS-SUMMATION OF ALL RELEASES
TMI-2

	UNITS	2001 1ST QUARTER	2001 2ND QUARTER	2001 3RD QUARTER	2001 4TH QUARTER	EST. TOTAL ERROR %
A. FISSION AND ACTIVATION GASES						
1. TOTAL RELEASE	Ci	<LLD	<LLD	<LLD	<LLD	25%
2. AVERAGE RELEASE RATE FOR PERIOD	uCi/sec	N/A	N/A	N/A	N/A	
3. PERCENT OF TECH SPEC LIMIT	%	*	*	*	*	
B. IODINES		NOT APPLICABLE FOR TMI-2				
C. PARTICULATES						
1. PARTICULATES WITH HALF-LIVES > 8 DAYS	Ci	<LLD	<LLD	<LLD	<LLD	25%
2. AVERAGE RELEASE RATE FOR PERIOD	uCi/sec	N/A	<N/A	<N/A	<N/A	
3. PERCENT OF TECH SPEC LIMIT	%	*	*	*	*	
4. GROSS ALPHA RADIOACTIVITY	Ci	<LLD	<LLD	<LLD	<LLD	
D. TRITIUM						
1. TOTAL RELEASE	Ci	9.4E-01	5.0E-01	3.3E-01	9.9E-02	25%
2. AVERAGE RELEASE RATE FOR PERIOD	uCi/sec	1.2E-01	6.4E-02	4.2E-02	1.2E-02	
3. PERCENT OF TECH SPEC LIMIT	%	*	*	*	*	
# BATCH RELEASES		0	0	0	0	

* % ODCM LIMITS: LISTED ON DOSE SUMMARY TABLE
NOTE: ALL LESS THAN (<) VALUES ARE IN uCi/ml

TABLE 1C
EFFLUENT AND WASTE DISPOSAL ANNUAL REPORT
GASEOUS EFFLUENTS-GROUND LEVEL RELEASES
TMI-2
2001

NUCLIDES RELEASED	UNIT	CONTINUOUS MODE		BATCH MODE		CONTINUOUS MODE		BATCH MODE	
		1ST QUARTER	2ND QUARTER	1ST QUARTER	ND QUARTE	3RD QUARTER	4TH QUARTER	3RD QUARTER	4TH QUARTER
1. FISSION GASES									
KRYPTON-85	Ci	<2 E-5	<2 E-5	<2 E-5	<2 E-5	<2 E-5	<2 E-5	<2 E-5	<2 E-5
KRYPTON-85M	Ci	<5E-8	<5E-8	<5E-8	<5E-8	<5E-8	<5E-8	<5E-8	<5E-8
KRYPTON-87	Ci	<1 E-7	<1 E-7	<1 E-7	<1 E-7	<1 E-7	<1 E-7	<1 E-7	<1 E-7
KRYPTON-88	Ci	<2 E-7	<2 E-7	<2 E-7	<2 E-7	<2 E-7	<2 E-7	<2 E-7	<2 E-7
XENON-133	Ci	<2 E-7	<2 E-7	<2 E-7	<2 E-7	<2 E-7	<2 E-7	<2 E-7	<2 E-7
XENON-135	Ci	<5 E-8	<5 E-8	<5 E-8	<5 E-8	<5 E-8	<5 E-8	<5 E-8	<5 E-8
XENON-135M	Ci	<5 E-7	<5 E-7	<5 E-7	<5 E-7	<5 E-7	<5 E-7	<5 E-7	<5 E-7
XENON-138	Ci	<5 E-7	<5 E-7	<5 E-7	<5 E-7	<5 E-7	<5 E-7	<5 E-7	<5 E-7
AR-41	Ci	<3E-7	<3E-7	<3E-7	<3E-7	<3E-7	<3E-7	<3E-7	<3E-7
TOTAL FOR PERIOD	Ci	N/A	N/A	N/A	N/A	N/A	N/A	N/A	N/A
2. IODINES		NOT APPLICABLE TO TMI-2							
3. PARTICULATES									
STRONTIUM-90	Ci	<1 E-11	<1 E-11	N/A	N/A	<1 E-11	<1 E-11	N/A	N/A
COBALT 60	Ci	<1 E-10	<1 E-10	N/A	N/A	<1 E-10	<1 E-10	N/A	N/A
ANTIMONY 125	Ci	<1 E-10	<1 E-10	N/A	N/A	<1 E-10	<1 E-10	N/A	N/A
CESIUM-134	Ci	<1 E-10	<1 E-10	N/A	N/A	<1 E-10	<1 E-10	N/A	N/A
CESIUM-137	Ci	<1 E-10	<1 E-10	N/A	N/A	<1 E-10	<1 E-10	N/A	N/A
TOTAL FOR PERIOD	Ci	N/A	N/A	N/A	N/A	N/A	N/A	N/A	N/A
4. TRITIUM									
TRITIUM	Ci	9.4E-01	5.00E-01	<1 E-6	<1 E-6	3.30E-01	9.89E-02	<1 E-6	<1 E-6

NOTE: ALL LESS THAN (<) VALUES ARE IN uCi/ml

TABLE 2A
EFFLUENT AND WASTE DISPOSAL ANNUAL REPORT
LIQUID EFFLUENTS-SUMMATION OF ALL RELEASES
TMI-2

	UNITS	2001 1ST QUARTER	2001 2ND QUARTER	2001 3RD QUARTER	2001 4TH QUARTER	EST. TOTAL ERROR %
A. FISSION AND ACTIVATION PRODUCTS						
1. TOTAL RELEASES (NOT INCLUDING TRITIUM, GASES, ALPHA)	Ci	3.4E-06	8.8E-06	5.4E-06	4.4E-06	25%
2. AVERAGE DILUTED CONCENTRATION DURING PERIOD	uCi/ml	6.4E-13	1.3E-12	8.2E-13	5.6E-13	
3. PERCENT OF APPLICABLE LIMIT	%	*	*	*	*	
B. TRITIUM						
1. TOTAL RELEASE	Ci	3.0E-05	6.6E-04	2.9E-05	7.6E-05	25%
2. AVERAGE DILUTED CONCENTRATION DURING PERIOD	uCi/ml	5.7E-12	9.7E-11	4.4E-12	9.6E-12	
3. PERCENT OF APPLICABLE LIMIT	%	*	*	*	*	
C. DISSOLVED AND ENTRAINED GASES						
1. TOTAL RELEASE	Ci	<LLD	<LLD	<LLD	<LLD	25%
2. AVERAGE DILUTED CONCENTRATION DURING PERIOD	uCi/ml	N/A	N/A	N/A	N/A	
3. PERCENT OF APPLICABLE LIMIT	%	*	*	*	*	
D. GROSS ALPHA ACTIVITY						
1. TOTAL RELEASE	Ci	<LLD	<LLD	<LLD	<LLD	25%
E. VOLUME OF WASTE RELEASED (PRIOR TO DILUTION)	liters	8.9E+02	1.4E+05	1.2E+03	1.1E+03	10%
F. VOLUME OF DILUTION WATER USED	liters	5.3E+09	6.8E+09	6.6E+09	7.9E+09	10%
NUMBER OF BATCH RELEASES		1	3	1	1	

* % ODCM LIMITS: LISTED ON DOSE SUMMARY TABLE
NOTE: ALL LESS THAN (<) VALUES ARE IN uCi/ml

TABLE 2B
EFFLUENT AND WASTE DISPOSAL ANNUAL REPORT
LIQUID EFFLUENTS
TMI-2
2001

		CONTINUOUS MODE		BATCH MODE		CONTINUOUS MODE		BATCH MODE	
NUCLIDES RELEASED	UNIT	1ST QUARTER	2ND QUARTER	1ST QUARTER	2ND QUARTER	3RD QUARTER	4TH QUARTER	3RD QUARTER	4TH QUARTER
CO 60	Ci	<5 E-7	<5 E-7	<5 E-7	<5 E-7	<5 E-7	<5 E-7	<5 E-7	<5 E-7
SR 90	Ci	<5 E-8	<5 E-8	2.8E-09	<5 E-8	<5 E-8	<5 E-8	6.8E-08	2.8E-08
SB 125	Ci	<5 E-7	<5 E-7	<5 E-7	<5 E-7	<5 E-7	<5 E-7	<5 E-7	<5 E-7
CS 134	Ci	<5 E-7	<5 E-7	<5 E-7	<5 E-7	<5 E-7	<5 E-7	<5 E-7	<5 E-7
CS 137	Ci	<5 E-7	<5 E-7	3.4E-06	8.8E-06	<5 E-7	<5 E-7	5.3E-06	4.4E-06
H-3	Ci	<1 E-5	<1 E-5	3.0E-05	6.6E-04	<1 E-5	<1 E-5	2.9E-05	7.6E-05
TOTAL FOR PERIOD	Ci	NA	NA	3.4E-05	6.7E-04	NA	NA	3.4E-05	8.1E-05

NOTE: ALL LESS THAN VALUES (<) ARE IN uCi/ml

Attachment 2
2001 Annual Radioactive Effluent Releases Report for TMI
5928-02-200095

Solid Waste Shipped Offsite during 2001

TABLE 3 EFFLUENT AND WASTE DISPOSAL ANNUAL REPORT SOLID WASTE AND IRRADIATED FUEL SHIPMENTS			
A. Solid waste shipped off-site for burial or disposal (not irradiated fuel)			
1. Type of waste	UNIT	12 month period	EST. Total Error %
a. Spent resins, filter sludges, Evaporator bottoms, etc.	m^3 Ci	$6.09m^3$ 70.7 Ci	25%
b. Dry compressible waste, contaminated equipment, etc.	m^3 Ci	$2128.9m^3$ 1.78Ci	25%
c. Irradiated components, control rods, etc.	m^3 Ci	N/A	N/A
d. Other (describe) : Solidified Liquid	m^3 Ci	29.45 m^3 .0179Ci	25%
2. Estimate of major nuclide composition (by type of waste)			
a. Fe55	6.87%		
Cs137	41.8%		
Ni63	33.5%		
Cs134	13.4%		
b. Ni63	7.50%		
Cs137	62.8%		
Co58	22.9%		
Sr90	1.66%		
Cs134	3.35%		
c. N/A	%		
d. Cs137	84.3 %		
Sr90	.997%		
Ni63	5.997%		
Cs134	6.24%		
3. Solid Waste Disposition Number of Shipments	Mode of Transportation		Destination
See attached for this information			
B. Irradiated Fuel Shipments (Disposition)			
Number of Shipments	Mode of Transportation		Destination
N/A			

WASTE SHIPPED AS FOLLOWS

A.1.a

One(1)- Stainless Steel reusable liner @ 215 ft3- Dewatered Resin

A.1.b

Thirty-four (34) Intermodal Containers @ 1040 ft ea. – Turbine metals

Twelve (12) – Enviropak Bags @ 192 ft3 ea. – Turbine metals

Three (3) – Enviropak Bags @ 5147 ft3 ea. – Turbine metals

Three (3) – Enviropak Bags @ 1890 ft3 ea. – Turbine metals

Three (3) – Enviropak Bags @ 2770 ft3 ea. – Turbine metals

One (1) Enviropak Bag @ 1470 ft3 – Turbine metals

Fourteen (14) – steel boxes at 96 ft3 ea. – metals

Twenty-two (22)- steel drums @ 7.5 ft3 ea. –building debris

Four (4) – 20' cargo containers @ 1280 ft3 ea.- uncompacted DAW

A-1-d

One (1) – steel tanker @ 1040 ft3 – oil

A.3.a

One Shipment	Hittman Transport Cask	Studsvik Process Ctr- Erwin,TN

A.3.b

Forty-four ship.	MHF Logistics-Flatbed	RACE- LLC Memphis ,TN
Three Shipments	Norfolk Southern-Rail	RACE LLC Memphis,TN
Three Shipments	TSMT- Flatbed	RACE LLC Memphis,TN.
Four Shipments	Hittman Transport-Flatbed	Duratek-Oak Ridge,TN
Two Shipments	Kindrick Trucking – Flatbed	ATG –Oak Ridge,TN.

A.3.d

One Shipment	Kindrick Trucking-Flatbed	ATG- Oak Ridge,TN.

* ALL SHIPMENT WERE TYPE A- LSA-II

Attachment 3
2001 Annual Radioactive Effluent Releases Report for TMI
5928-02-20095

Summary of Unplanned Releases from the TMI Site During 2001

There were no unplanned releases to unrestricted areas from either the TMI-1 or TMI-2 site during 2001.

Attachment 4
2001 Annual Radioactive Effluent Releases Report for TMI
5928-02-20095

Changes to the Process Control Program and the Offsite Dose Calculation Manual during 2001, And a listing of new locations for dose calculations and/or environmental monitoring identified by the land use census

1. Changes to the Process Control Program

Section 6.8.1 of the TMI-1 Technical Specifications requires that a procedure be established, implemented and maintained for the Process Control Program Implementation. TMI procedure 1104-28I (Waste Solidification Process Control Program) had been the document used to ensure that waste would be processed to meet waste stability requirements of 10 CFR 61.56 prior to disposal. Procedure 1104-28I was used in conjunction with operating procedures 1104-28A(Evaporator Concentrate Processing) and1104 -28C (Primary Resin and Precoat Processing) to ensure that radioactive wastes would be solidified or dewatered in compliance with 10 CFR Parts 20,61,71 ,State Regulations, burial ground requirements and other requirements that govern the disposal of radioactive waste. With TMI now part of a much larger organization, a goal of standardizing radioactive waste handling procedures was undertaken across the Exelon Fleet. The result has been a new Process Control Program for Radioactive Waste ,Procedure RW-AA-100, implemented at TMI on August 17, 2001. This procedure now looks the same at all of the Exelon operated plants. The advantage to TMI, is that now the boundaries and parameters for the preparation of procedures for processing ,sampling, analysis, packaging, storage and shipment of solid radwaste for compliance with local, state, federal, and burial site requirements are found in the same document. Previously these requirements were found throughout many documents, making it somewhat cumbersome to ensure documented compliance with the applicable regulations for a given waste stream. In conclusion, TMI is still applying the same process and bounding conditions for the preparation of radioactive waste for transportation and disposal as the previous version of the Process Control Program. The new procedure covers all radioactive waste generated at this station in one document versus being addressed over many procedures, thus making documented compliance with the federal, state, local, and burial site criteria much easier to monitor.

2. Changes to the Offsite Dose Calculation Manual during 2001

The Offsite Dose Calculation Manual (ODCM) was modified twice during 2001. These changes did not reduce the accuracy or reliability of dose calculations or setpoint determinations. The level of effluent controls required by 10 CFR 20.1301, 40 CFR 190, 10 CFR 50.36a, and Appendix I to 10 CFR 50 was not reduced and the accuracy or reliability of effluent, dose or setpoint calculations was not adversely impacted for the reasons stated below.

Revision 21 of the ODCM was issued on January 19, 2001. Revision 21 made the following changes to the ODCM:

- Eliminated references to GPU Nuclear.
- Changed the title of Director Operations and Maintenance to Plant Manager.
- Clarifies the TMI-2 effluent flow rate as a monitoring device, since this recorder sums the flows from individual measuring devices. It also clarifies the available compensatory action if this monitoring device is out of service.
- Clarifies that releases from the Waste Evaporator Condensate Storage Tanks (WECST) uses 20% of ODCM liquid concentration limits for tritium and 10% for other isotopes as an administrative means of ensuring compliance with ODCM Control 2.2.1.1. The limits specified in ODCM Control 2.2.1.1 are not affected.

Revision 22 of the ODCM was issued on May 4, 2001. Revision 22 made the following changes to the ODCM:

- Eliminates the need to change the alarm setpoint for RM-L-6 each time a WECST is released.
- Changes "National Bureau of Standards" to "National Institute of Standards and Technology."
- Added typical flow rates for the gaseous release points in buildings located outside the "power-block."

3. A listing of new locations for dose calculations and/or environmental monitoring identified by the land use census

Based on the results of the 2001 land use census, no changes to the radiological environmental monitoring program or the dose model are required.

Attachment 5
2001 Annual Radioactive Effluent Releases Report for TMI
5928-02-20095

Instrumentation not returned to Operable status within 30 days during 2001

There was no instrumentation not returned to operable status within 30 days per the TMI ODCM Part 1, Sections 2.1.1.b and 2.1.2.b and Part 2, Section 2.1.2.b during 2001.

Attachment 6
2001 Annual Radioactive Effluent Releases Report for TMI
5928-02-20095

Annual Summary of Hourly Meteorological Data for 2001

THREE MILE ISLAND METEROLOGICAL DATA
2001 JOINT FREQUENCY TABLES

HOURS AT EACH WIND SPEED AND DIRECTION
PERIOD OF RECORD: January 1, 2001 TO December 31, 2001
STABILITY CLASS: A

SECTOR WINDS TO	FROM	WIND SPEED 1-3	4-7	8-12	13-18	19-24	>24	TOTAL
N	S	15	35	34	1	0	0	85
NNE	SSW	9	73	68	7	0	0	157
NE	SW	21	45	22	2	0	0	90
ENE	WSW	22	27	7	1	0	0	57
E	W	24	34	20	10	1	0	89
ESE	WNW	45	53	36	9	1	0	144
SE	NW	68	120	81	35	5	0	309
SSE	NNW	69	119	48	9	0	0	245
S	N	13	29	27	0	0	0	69
SSW	NNE	7	10	4	0	0	0	21
SW	NE	5	5	0	0	0	0	10
WSW	ENE	5	14	0	0	0	0	19
W	E	9	16	8	0	0	0	33
WNW	ESE	11	22	28	0	0	0	61
NW	SE	19	18	18	2	0	0	57
NNW	SSE	15	27	8	1	0	0	51
TOTAL		357	647	409	77	7	0	1497

THREE MILE ISLAND METEROLOGICAL DATA
2001 JOINT FREQUENCY TABLES

HOURS AT EACH WIND SPEED AND DIRECTION
PERIOD OF RECORD: January 1, 2001 TO December 31, 2001
STABILITY CLASS: B

SECTOR WINDS TO	FROM	WIND SPEED 1-3	4-7	8-12	13-18	19-24	>24	TOTAL
N	S	3	13	7	0	0	0	23
NNE	SSW	4	12	11	3	0	0	30
NE	SW	4	9	6	0	0	0	19
ENE	WSW	8	1	2	1	0	0	12
E	W	4	8	13	11	0	0	36
ESE	WNW	7	11	21	17	2	0	58
SE	NW	3	27	21	31	9	0	91
SSE	NNW	8	14	8	3	2	0	35
S	N	2	6	4	2	0	0	14
SSW	NNE	3	3	1	0	0	0	7
SW	NE	3	3	1	0	0	0	7
WSW	ENE	5	4	0	0	0	0	9
W	E	1	6	4	0	0	0	11
WNW	ESE	4	9	6	1	0	0	20
NW	SE	7	6	12	0	0	0	25
NNW	SSE	2	3	4	0	0	0	9
TOTAL		68	135	121	69	13	0	406

THREE MILE ISLAND METEROLOGICAL DATA
2001 JOINT FREQUENCY TABLES

HOURS AT EACH WIND SPEED AND DIRECTION
PERIOD OF RECORD: January 1, 2001 TO December 31, 2001
STABILITY CLASS: C

SECTOR WINDS TO	FROM	WIND SPEED 1-3	4-7	8-12	13-18	19-24	>24	TOTAL
N	S	1	6	3	2	0	0	12
NNE	SSW	1	10	10	0	0	0	21
NE	SW	0	4	3	0	0	0	7
ENE	WSW	5	4	2	0	0	0	11
E	W	1	5	8	4	0	0	18
ESE	WNW	1	6	14	5	0	0	26
SE	NW	3	13	8	12	4	1	41
SSE	NNW	5	8	5	5	0	0	23
S	N	4	3	1	0	0	0	8
SSW	NNE	1	0	1	0	0	0	2
SW	NE	1	4	0	0	0	0	5
WSW	ENE	0	8	0	0	0	0	8
W	E	2	7	6	0	0	0	15
WNW	ESE	1	6	9	2	0	0	18
NW	SE	1	2	7	1	0	0	11
NNW	SSE	0	3	1	0	0	0	4
TOTAL		27	89	78	31	4	1	230

THREE MILE ISLAND METEROLOGICAL DATA
2001 JOINT FREQUENCY TABLES

HOURS AT EACH WIND SPEED AND DIRECTION
PERIOD OF RECORD: January 1, 2001 TO December 31, 2001
STABILITY CLASS: D

SECTOR WINDS TO	FROM	WIND SPEED 1-3	4-7	8-12	13-18	19-24	>24	TOTAL
N	S	8	65	30	1	0	0	104
NNE	SSW	14	82	47	4	0	0	147
NE	SW	19	43	9	1	0	0	72
ENE	WSW	20	25	13	1	0	0	59
E	W	27	70	100	29	1	0	227
ESE	WNW	39	73	121	83	9	0	325
SE	NW	34	80	109	109	41	5	378
SSE	NNW	37	52	53	24	17	0	183
S	N	32	40	13	1	1	0	87
SSW	NNE	27	30	3	0	0	0	60
SW	NE	28	27	7	3	0	0	65
WSW	ENE	28	52	7	4	0	0	91
W	E	32	86	39	0	0	0	157
WNW	ESE	37	67	85	10	0	0	199
NW	SE	26	72	48	7	0	0	153
NNW	SSE	22	54	17	0	0	0	93
TOTAL		430	918	701	277	69	5	2400

THREE MILE ISLAND METEROLOGICAL DATA
2001 JOINT FREQUENCY TABLES

HOURS AT EACH WIND SPEED AND DIRECTION
PERIOD OF RECORD: January 1, 2001 TO December 31, 2001
STABILITY CLASS: E

SECTOR WINDS TO	FROM	WIND SPEED 1-3	4-7	8-12	13-18	19-24	>24	TOTAL
N	S	22	64	28	0	0	0	114
NNE	SSW	27	86	20	3	1	0	137
NE	SW	48	83	7	3	0	0	141
ENE	WSW	47	79	14	1	0	0	141
E	W	50	107	39	7	1	0	204
ESE	WNW	45	88	75	18	2	0	228
SE	NW	69	52	75	18	2	0	216
SSE	NNW	58	91	19	5	0	0	173
S	N	52	80	9	1	0	0	142
SSW	NNE	36	22	2	0	0	0	60
SW	NE	29	25	1	0	0	0	55
WSW	ENE	39	27	2	0	0	0	68
W	E	65	55	1	0	0	0	121
WNW	ESE	42	42	15	0	0	0	99
NW	SE	33	28	10	0	0	0	71
NNW	SSE	32	44	1	0	0	0	77
TOTAL		694	973	318	56	6	0	2047

THREE MILE ISLAND METEROLOGICAL DATA
2001 JOINT FREQUENCY TABLES

HOURS AT EACH WIND SPEED AND DIRECTION
PERIOD OF RECORD: January 1, 2001 TO December 31, 2001
STABILITY CLASS: F

SECTOR WINDS TO	FROM	WIND SPEED 1-3	4-7	8-12	13-18	19-24	>24	TOTAL
N	S	38	9	0	0	0	0	47
NNE	SSW	46	26	0	0	0	0	72
NE	SW	60	25	1	0	0	0	86
ENE	WSW	47	22	0	0	0	0	69
E	W	57	22	2	0	0	0	81
ESE	WNW	59	21	1	1	0	0	82
SE	NW	58	8	2	1	0	0	69
SSE	NNW	53	40	2	2	0	0	97
S	N	32	31	0	0	0	0	63
SSW	NNE	23	13	0	0	0	0	36
SW	NE	19	5	0	0	0	0	24
WSW	ENE	22	3	0	0	0	0	25
W	E	35	19	0	0	0	0	54
WNW	ESE	56	7	0	0	0	0	63
NW	SE	35	9	0	0	0	0	44
NNW	SSE	36	5	2	0	0	0	43
TOTAL		676	265	10	4	0	0	955

THREE MILE ISLAND METEROLOGICAL DATA
2001 JOINT FREQUENCY TABLES

HOURS AT EACH WIND SPEED AND DIRECTION
PERIOD OF RECORD: January 1, 2001 TO December 31, 2001
STABILITY CLASS: G

SECTOR WINDS TO	FROM	WIND SPEED 1-3	4-7	8-12	13-18	19-24	>24	TOTAL
N	S	26	6	0	0	0	0	32
NNE	SSW	60	21	1	0	0	0	82
NE	SW	44	9	1	0	0	0	54
ENE	WSW	29	10	0	0	0	0	39
E	W	26	5	1	0	0	0	32
ESE	WNW	29	4	0	0	0	0	33
SE	NW	32	9	3	0	0	0	44
SSE	NNW	29	15	2	0	0	0	46
S	N	21	7	0	0	0	0	28
SSW	NNE	9	4	0	0	0	0	13
SW	NE	14	0	0	0	0	0	14
WSW	ENE	17	2	0	0	0	0	19
W	E	27	12	0	0	0	0	39
WNW	ESE	37	13	0	0	0	0	50
NW	SE	43	5	0	0	0	0	48
NNW	SSE	38	0	0	0	0	0	38
TOTAL		481	122	8	0	0	0	611

THREE MILE ISLAND METEROLOGICAL DATA
2001 JOINT FREQUENCY TABLES

HOURS AT EACH WIND SPEED AND DIRECTION
PERIOD OF RECORD: January 1, 2001 TO December 31, 2001
STABILITY CLASS: ALL

SECTOR WINDS TO	FROM	WIND SPEED 1-3	4-7	8-12	13-18	19-24	>24	TOTAL
N	S	113	198	102	4	0	0	417
NNE	SSW	161	310	157	17	1	0	646
NE	SW	196	218	49	6	0	0	469
ENE	WSW	178	168	38	4	0	0	388
E	W	189	251	183	61	3	0	687
ESE	WNW	225	256	268	133	14	0	896
SE	NW	267	309	299	206	61	6	1148
SSE	NNW	259	339	137	48	19	0	802
S	N	156	196	54	4	1	0	411
SSW	NNE	106	82	11	0	0	0	199
SW	NE	99	69	9	3	0	0	180
WSW	ENE	116	110	9	4	0	0	239
W	E	171	201	58	0	0	0	430
WNW	ESE	188	166	143	13	0	0	510
NW	SE	164	140	95	10	0	0	409
NNW	SSE	145	136	33	1	0	0	315
TOTAL		2733	3149	1645	514	99	6	8146

Hours of Missing/Invalid Data: 614

Attachment 7
2001 Annual Radioactive Effluent Releases Report for TMI
5928-02-20095

Assessment of Radiation Doses Due to Radioactive Liquid and Gaseous Effluents Released from TMI during 2001

TMI-1

The attached table presents the maximum hypothetical doses to an individual and the general population resulting from 2001 TMI-1 releases of gaseous and liquid effluents. Provided below is a brief explanation of the table.

A. Liquid (Individual)

Calculations were performed on the four age groups and eight organs recommended in Regulatory Guide 1.109. The pathways considered for TMI-1 were the consumption of drinking water and fish and standing on the shoreline influenced by TMI-1 effluents. The latter two pathways are considered to be the primary recreational activities associated with the Susquehanna River in the vicinity of TMI. The "critical receptor" or Receptor 1 was that individual who 1) consumed Susquehanna River water from the nearest downstream drinking water supplier (Wrightsville Water Supply), 2) consumed fish residing in the vicinity of the TMI-1 liquid discharge outfall and 3) occupied an area of shoreline influenced by the TMI-1 liquid discharge.

For 2001, the calculated maximum whole body (or total body) dose from TMI-1 liquid effluents was 1.60E-1 mrem to an adult (line 1). The maximum organ dose was 2.41E-1 mrem to the liver of a teen (line 2).

B. Gaseous (Individual)

There were six major pathways considered in the dose calculations for TMI-1 gaseous effluents. These were: (1) plume exposure (2) inhalation, consumption of; (3) cow milk, (4) vegetables and fruits, (5) meat, and (6) standing on contaminated ground. Real-time meteorology was used in all dose calculations for gaseous effluents.

Lines 3 and 4 present the maximum plume exposure at or beyond the site boundary. The notation of "air dose" is interpreted to mean that these doses are not to an individual, but are considered to be the maximum doses that would have occurred at or beyond the site boundary. The table presents the distance in meters to the location in the affected sector (compass point) where the theoretical maximum plume exposures occurred. The calculated maximum plume exposures were 9.85E-4 mrad and 1.26E-3 mrad for gamma and beta, respectively.

The maximum organ dose due to the release of iodines, particulates and tritium from TMI-1 in 2001 was 1.08E-2 mrem to the thyroid of an child residing 2150 meters from the site in the NNE sector (line 5). This dose again reflects the maximum exposed organ for the appropriate age group.

C. Liquid and Gaseous (Population)

Lines 6 - 9 present the person-rem doses resulting from 2001 TMI-1 liquid and gaseous effluents. These doses were summed over all pathways and the affected populations. The person-rem doses from liquid effluents were based upon the population encompassed within the region from the TMI-1 outfall extending down to the Chesapeake Bay (approximately 5,000,000 people). The person-rem doses from gaseous effluents were based upon the 1980 population and considered the population out to a distance of 50 miles around TMI (approximately 2,200,000 people). Population doses were summed over all distances and sectors to give an aggregate dose.

The calculated maximum whole body dose to the affected population from
TMI-1 liquid effluents was 1.03E+1 person-rem. The maximum critical organ population dose from liquid effluents was 1.04E+1 person-rem to the liver. TMI-1 gaseous effluents resulted in a whole body population dose of 4.99E-1 person-rem and a maximum critical organ population dose of 4.99E-1 person-rem to the liver, thyroid, kidney, lung and GI tract.

For 2001, TMI-1 liquid and gaseous effluents resulted in maximum hypothetical doses that were a small fraction of the quarterly and yearly ODCM dose limits.

TMI-1
SUMMARY OF MAXIMUM INDIVIDUAL DOSES FOR TMI-1 FROM
January 1, 2001 through December 31, 2001

Effluent	Applicable Organ	Estimated Dose (mrem)	Age Group	Location Dist (m)	Location Dir (to)	% of ODCM Dose Limit Quarter	% of ODCM Dose Limit Annual	ODCM Dose Limit (mrem) Quarter	ODCM Dose Limit (mrem) Annual
(1) Liquid	Total Body	1.60E-1	Adult	Receptor 1		1.07E+1	5.33E0	1.5	3
(2) Liquid	Liver	2.41E-1	Teen	Receptor 1		4.82E0	2.41E0	5	10
(3) Noble Gas	Air Dose (gamma-mrad)	9.85E-4	---	610	NNE	1.97E-2	9.85E-3	5	10
(4) Noble Gas	Air Dose (beta-mrad)	1.26E-3	---	610	NNE	1.26E-2	6.30E-3	10	20
(5) Iodine, Tritium & Particulates	Thyroid	1.08E-2	Child	2150	NNE	1.44E-1	7.20E-2	7.5	15

SUMMARY OF MAXIMUM POPULATION DOSES FOR TMI-1 FROM
January 1, 2001 through December 31, 2001

Effluent	Applicable Organ	Estimated Population Dose (person-rem)
(6) Liquid	Total Body	1.03E+1
(7) Liquid	Liver	1.04E+1
(8) Gaseous	Total Body	4.99E-1
(9) Gaseous	Liver, Thyroid Kidney, Lung & GI Tract	4.99E-1

TMI-2

The attached table presents the maximum hypothetical doses to an individual and the general population resulting from 2001 TMI-2 releases of gaseous and liquid effluents. Provided below is a brief explanation of the table.

A. Liquid (Individual)

Calculations were performed on the four age groups and eight organs recommended in Regulatory Guide 1.109. The pathways considered for TMI-2 were the consumption of drinking water and fish and standing on the shoreline influenced by TMI-2 effluents. The latter two pathways are considered to be the primary recreational activities associated with the Susquehanna River in the vicinity of TMI. The "critical receptor" or Receptor 1 was that individual who 1) consumed Susquehanna River water from the nearest downstream drinking water supplier (Wrightsville Water Supply), 2) consumed fish residing in the vicinity of the TMI-2 liquid discharge outfall and 3) occupied an area of shoreline influenced by the TMI-2 liquid discharge.

For 2001, the calculated maximum whole body (or total body) dose from TMI-2 liquid effluents was 4.74E-4 mrem to an adult (line 1). The maximum organ dose was 7.53E-4 mrem to the liver of a teen (line 2).

B. Gaseous (Individual)

There were six major pathways considered in the dose calculations for TMI-2 gaseous effluents. These were: (1) plume exposure (2) inhalation, consumption of; (3) cow milk, (4) vegetables and fruits, (5) meat, and (6) standing on contaminated ground. Real-time meteorology was used in all dose calculations for gaseous effluents.

Since there were no noble gases released from TMI-2 during 2001, the gamma and beta air doses (lines 3 and 4, respectively) were zero.

The maximum organ dose due to the release of particulates and tritium from TMI-2 in 2001 was 4.80E-5 mrem to the liver, total body, thyroid, kidney, lung and GI tract of a child residing 2000 meters from the site in the SE sector (line 5).

C. Liquid and Gaseous (Population)

Lines 6 - 9 present the person-rem doses resulting from 2001 TMI-2 liquid and gaseous effluents. These doses were summed over all pathways and the affected populations. The person-rem doses from liquid effluents were based upon the
population encompassed within the region from the TMI-2 outfall extending down to the Chesapeake Bay (approximately 5,000,000 people). The person-rem doses from gaseous effluents were based upon the 1980 population and considered the population out to a

distance of 50 miles around TMI (approximately 2,200,000 people). Population doses were summed over all distances and sectors to give an aggregate dose.

The calculated maximum whole body dose to the affected population from TMI-2 liquid effluents was 2.82E-4 person-rem. The maximum critical organ population dose from liquid effluents was 5.97E-4 person-rem to the bone. TMI-2 gaseous effluents resulted in a whole body population dose of 3.67E-3 person-rem and a maximum critical organ population dose of 3.67E-3 person-rem to the liver, thyroid, kidney, lung and GI tract.

For 2001, TMI-2 liquid and gaseous effluents resulted in maximum hypothetical doses that were a small fraction of the quarterly and yearly ODCM dose limits.

TMI-2
SUMMARY OF MAXIMUM INDIVIDUAL DOSES FOR TMI-2 FROM
January 1, 2001 through December 31, 2001

Effluent	Applicable Organ	Estimated Dose (mrem)	Age Group	Location Dist (m)	Location Dir (to)	% of ODCM Dose Limit Quarter	% of ODCM Dose Limit Annual	ODCM Dose Limit (mrem) Quarter	ODCM Dose Limit (mrem) Annual
(1) Liquid	Total Body	4.74E-4	Adult	Receptor 1		3.16E-2	1.58E-2	1.5	3
(2) Liquid	Liver	7.53E-4	Teen	Receptor 1		1.51E-2	7.53E-3	5	10
(3) Noble Gas	Air Dose (gamma-mrad)	0	---	---	---	0	0	5	10
(4) Noble Gas	Air Dose (beta-mrad)	0	---	---	---	0	0	10	20
(5) Tritium & Particulate	Liver, Total Body, Thyroid, Kidney, Lung & GI Tract	4.80E-5	Child	2000	SE	6.40E-4	3.20E-4	7.5	15

SUMMARY OF MAXIMUM POPULATION DOSES FOR TMI-2 FROM
January 1, 2001 through December 31, 2001

Effluent	Applicable Organ	Estimated Population Dose (person-rem)
(6) Liquid	Total Body	2.82E-4
(7) Liquid	Bone	5.97E-4
(8) Gaseous	Total Body	3.67E-3
(9) Gaseous	Liver, Thyroid, Kidney, Lung & GI Tract	3.67E-3

Attachment 8
2001 Annual Radioactive Effluent Releases Report for TMI
5928-02-20095

Assessment of Radiation Doses from Liquid and Gaseous Effluents Releases to Members of the Public within the TMI Site Boundaries during 2001

The Offsite Dose Calculation Manual requires an assessment of the radiation doses from radioactive liquid and gaseous effluents to members of the public due to their activities inside the site boundary during the reporting period.

The following are the assumptions made in this assessment:

1. A member of the public stays in the owner controlled area for 67 hours. The 67 hours is based upon shoreline recreation period given in Table E-5, of Regulatory Guide 1.109.

2. The individual is standing next to a radiologically controlled area, where the dose rate is 0.5 mR/hr. In areas where the dose rate is greater than 0.5 mR/hr, the area would be posted as a restricted area.

3. Liquid effluents are not a pathway to the individual on site.

4. The maximum airborne effluent per hour is characterized by Release G200110016, which is a RB purge. This effluent release had the highest concentration of radionuclides released into the air for year 2001. (Ar-41 1.1E-6 μCi/cc, Xe-133 3.72E-6 μCi/cc, and H-3 1.37E-6 μCi/cc)

5. Highest dispersion factor for gaseous effluents to personnel outside restricted area is 7.61E-5 sec/m^3 for the 67 hours used. This is the value used in Final Safety Analysis Report section 2.5.4.2.1, Containment release to Yard intake. This intake is close to the protected area and is close to where the Reactor Building (Containment) would release.

The maximum total body dose to an individual is 34 mrem.

Attachment 9
2001 Annual Radioactive Effluent Releases Report for TMI
5928-02-20095

Assessment of Radiation Dose to Most Likely Exposed Real Individual per 40 CFR 190

Dose calculations were performed to demonstrate compliance with 40 CFR 190 (ODCM Part IV Section 2.10). Gaseous and liquid effluents released from TMI-1 and TMI-2 in 2001 resulted in maximum individual doses (regardless of age group) of 0.02 mrem to the thyroid and 0.25 mrem to any other organ including the whole (total) body. The direct radiation component was determined using the highest quarterly fence-line exposure rate as measured by an environmental TLD, and subtracting from it, the lowest quarterly environmental TLD exposure rate.

Based on the maximum exposure rate of 6.1 mR/standard month, a person residing at the fence-line for 67 hours (shoreline exposure from Reg. Guide 1.109) received an exposure of 0.56 mR. Based on the lowest exposure rate of 3.5 mR/standard month and converting it by the same method yielded a background exposure of 0.32 mR. Therefore, the net exposure from direct radiation from TMINS was 0.24 mR. Combining the direct radiation exposure (assumed to be equal to dose) with the maximum organ doses from liquid and gaseous releases, the maximum potential (total) doses were 0.26 mrem to the thyroid and 0.49 mrem to any other organ. Both doses were well below the limits specified in 40 CFR 190.

Attachment 10
2001 Annual Radioactive Effluent Releases Report for TMI
5928-02-20095

Deviation from the ODCM Sampling and Analysis Regime during 2001

There was one deviation from the effluent sampling and analysis regime specified in the TMI Offsite Dose Calculation Manual during 2001.

The deviation was not obtaining a grab sample on a sump prior to discharging that sump. A condition report (TMI's corrective action system) was submitted as a result of the missed sample.

The maximum concentration value for the same type of water that was obtained during the month of release was used to account for the activity discharged. The dose and activity of this discharge is an insignificant value when compared to the plant's annual effluent.

Enclosure 1
2001 Annual Radioactive Effluent Releases Report for TMI
5928-02-20095

TMI Offsite Dose Calculation Manual, Revision 22
6610-PLN-4200.01

(Revision 22 was issued on
May 4, 2001)

AmerGen	TMI - Unit 1 Radiological Controls Procedure	Number 6610-PLN-4200.01
Title **Offsite Dose Calculation Manual (ODCM)**		Revision No. 22
Applicability/Scope TMI Division	USAGE LEVEL 3	Effective Date 05/04/01

This document is within QA plan scope	X	Yes		No
50.59 Applicable	X	Yes		No

List of Effective Pages

Page	Revision	Page	Revision	Page	Revision	Page	Revision
1	22	21	22	41	22	61	22
2	22	22	22	42	22	62	22
3	22	23	22	43	22	63	22
4	22	24	22	44	22	64	22
5	22	25	22	45	22	65	22
6	22	26	22	46	22	66	22
7	22	27	22	47	22	67	22
8	22	28	22	48	22	68	22
9	22	29	22	49	22	69	22
10	22	30	22	50	22	70	22
11	22	31	22	51	22	71	22
12	22	32	22	52	22	72	22
13	22	33	22	53	22	73	22
14	22	34	22	54	22	74	22
15	22	35	22	55	22	75	22
16	22	36	22	56	22	76	22
17	22	37	22	57	22	77	22
18	22	38	22	58	22	78	22
19	22	39	22	59	22	79	22
20	22	40	22	60	22	80	22

HISTORY INFO

	Signature	Date
Procedure Owner	/s/ B. A. Parfitt	03/06/01
Approver	/s/ J. Telfer	04/06/01

List of Effective Pages

Page	Revision	Page	Revision	Page	Revision	Page	Revision
81	22	121	22	161	22		
82	22	122	22	162	22		
83	22	123	22	163	22		
84	22	124	22	164	22		
85	22	125	22	165	22		
86	22	126	22	166	22		
87	22	127	22	167	22		
88	22	128	22	168	22		
89	22	129	22	169	22		
90	22	130	22	170	22		
91	22	131	22	171	22		
92	22	132	22	172	22		
93	22	133	22	173	22		
94	22	134	22	174	22		
95	22	135	22	175	22		
96	22	136	22	176	22		
97	22	137	22	177	22		
98	22	138	22	178	22		
99	22	139	22	179	22		
100	22	140	22	180	22		
101	22	141	22	181	22		
102	22	142	22	182	22		
103	22	143	22	183	22		
104	22	144	22	184	22		
105	22	145	22	185	22		
106	22	146	22	186	22		
107	22	147	22	187	22		
108	22	148	22	188	22		
109	22	149	22	189	22		
110	22	150	22	190	22		
111	22	151	22	191	22		
112	22	152	22	192	22		
113	22	153	22	193	22		
114	22	154	22	194	22		
115	22	155	22	195	22		
116	22	156	22	196	22		
117	22	157	22				
118	22	158	22				
119	22	159	22				
120	22	160	22				

HISTORY INFO

INTRODUCTION

The OFFSITE DOSE CALCULATION MANUAL (ODCM) is a supporting document of the Three Mile Island Nuclear Station (TMI) Unit 1 and Unit 2 PDMS Technical Specifications and implements TMI radiological effluent controls. The ODCM contains the controls, bases, and surveillance requirements for liquid and gaseous radiological effluents. In addition, the ODCM describes the methodology and parameters to be used in the calculation of off-site doses due to radioactive liquid and gaseous effluents. This document also describes the methodology used for calculation of the liquid and gaseous effluent monitoring instrumentation alarm/trip set points. Liquid and Gaseous Radwaste Treatment System configurations are also included.

The ODCM also is used to define the requirements for the TMI radiological environmental monitoring program (REMP) and contains a list and graphical description of the specific sample locations used in the REMP.

The ODCM is maintained at the Three Mile Island (TMI) site for use as a reference guide and training document of accepted methodologies and calculations. Changes in the calculation methods or parameters will be incorporated into the ODCM to ensure the ODCM represents the present methodology in all applicable areas. Changes to the ODCM will be implemented in accordance with the TMI-1 and TMI-2 PDMS Technical Specifications.

The ODCM follows the methodology and models suggested by NUREG-0133, and Regulatory Guide 1.109, Revision 1 for calculation of off-site doses due to plant effluent releases. Simplifying assumptions have been applied in this manual where applicable to provide a more workable document for implementation of the Radiological Effluent Controls requirements.

TMI implements the TMI Radiological Effluent Controls Program and Regulatory Guide 1.21, Revision 1 (Annual Radioactive Effluent Release Report) requirements by use of a computerized system used to determine TMI effluent releases and to update cumulative effluent doses.

HISTORY INFO

TABLE OF CONTENTS

PART I TMI-1 RADIOLOGICAL EFFLUENT CONTROLS

Section		Page
1.0	**DEFINITIONS**	15
	Table 1-1, Frequency Notation	19
2.0	**RADIOLOGICAL EFFLUENT CONTROLS AND BASES**	21
2.1	Radioactive Effluent Instrumentation	21
2.1.1	Radioactive Liquid Effluent Instrumentation	21
	Table 2.1-1, Radioactive Liquid Effluent Instrumentation	22
2.1.2	Radioactive Gaseous Process and Effluent Monitoring Instrumentation	23
	Table 2.1-2, Radioactive Gaseous Process and Effluent Monitoring Instrumentation	24
2.2	Radiological Effluent Controls	30
2.2.1	Liquid Effluent Controls	30
2.2.2	Gaseous Effluent Controls	33
2.2.3	Total Radioactive Effluent Controls	39
3.0	**SURVEILLANCES**	41
3.1	Radioactive Effluent Instrumentation	41
3.1.1	Radioactive Liquid Effluent Instrumentation	41
	Table 3.1-1, Radioactive Liquid Effluent Monitoring Instrumentation Surveillance Requirements	42
3.1.2	Radioactive Gaseous Process and Effluent Monitoring Instrumentation	44
	Table 3.1-2, Radioactive Gaseous Process and Effluent Monitoring Instrumentation Surveillance Requirements	45
3.2	Radiological Effluents	49
3.2.1	Liquid Effluents	49
	Table 3.2-1, Radioactive Liquid Waste Sampling and Analysis Program	50

HISTORY INFO

TABLE OF CONTENTS (Cont'd)

PART I TMI-1 RADIOLOGICAL EFFLUENT CONTROLS

Section		Page
3.2.2	Gaseous Effluents	53
Table 3.2-2, Radioactive Gaseous Waste Sampling and Analysis Program		55
3.2.3	Total Radioactive Effluents	59
4.0	**PART I REFERENCES**	60

HISTORY INFO

TABLE OF CONTENTS (Cont'd)

PART II TMI-2 RADIOLOGICAL EFFLUENT CONTROLS

Section		Page
1.0	DEFINITIONS	62
	Table 1.1, Frequency Notation	64
2.0	CONTROLS AND BASES	65
2.1	Radioactive Effluent Instrumentation	65
2.1.1	Radioactive Liquid Effluent Instrumentation	65
2.1.2	Radioactive Gaseous Process and Effluent Monitoring Instrumentation	65
	Table 2.1.2, Radioactive Gaseous Process and Effluent Monitoring Instrumentation	67
2.2	Radioactive Effluent Controls	68
2.2.1	Liquid Effluent Controls	68
2.2.2	Gaseous Effluent Controls	71
2.2.3	Total Radioactive Effluent Controls	76
3.0	SURVEILLANCES	78
3.1	Radioactive Effluent Instrumentation	78
3.1.1	Radioactive Liquid Effluent Instrumentation	78
3.1.2	Radioactive Gaseous Process and Effluents Monitoring Instrumentation	78
	Table 3.1-2, Radioactive Gaseous Process and Effluent Monitoring Instrumentation Surveillance Requirements	79
3.2	Radiological Effluents	80
3.2.1	Liquid Effluents	80
	Table 3.2-1, Radioactive Liquid Waste Sampling and Analysis Program	81
3.2.2	Gaseous Effluents	82
	Table 3.2-2, Radioactive Gaseous Waste Sampling and Analysis Program	83
3.2.3	Total Radioactive Effluents	86

HISTORY INFO

TABLE OF CONTENTS (Cont'd)

PART II TMI-2 RADIOLOGICAL EFFLUENT CONTROLS

Section		Page
4.0	**PART II REFERENCES**	87

HISTORY INFO

TABLE OF CONTENTS (Cont'd)

PART III EFFLUENT DATA AND CALCULATIONAL METHODOLOGIES

Section		Page
1.0	LIQUID EFFLUENT MONITORS	89
1.1	TMI-1 and TMI-2 Liquid Radiation Monitor Set Points	89
1.2	TMI Liquid Release Points and Liquid Radiation Monitor Data	90
1.3	Control of Liquid Releases	91
2.0	LIQUID EFFLUENT DOSE ASSESSMENT	97
2.1	Liquid Effluents - 10 CFR 50 Appendix I	97
2.2	TMI Liquid Radwaste System Dose Calcs Once per Month	98
2.3	Alternative Dose Calculational Methodology	99
3.0	LIQUID EFFLUENT WASTE TREATMENT SYSTEM	104
3.1	TMI-1 Liquid Effluent Waste Treatment System	104
3.2	Operability of TMI-1 Liquid Effluent Waste Treatment System	105
3.3	TMI-2 Liquid Effluent Waste Treatment System	105
4.0	GASEOUS EFFLUENT MONITORS	108
4.1	TMI-1 Noble Gas Monitor Set Points	108
4.2	TMI-1 Particulate and Radioiodine Monitor Set Points	110
4.3	TMI-2 Gaseous Radiation Monitor Set Points	111
4.4	TMI-1 Gaseous Effluent Release Points and Gaseous Radiation Monitor Data	112
4.5	TMI-2 Gaseous Effluent Release Points and Gaseous Radiation Monitor Data	114
4.6	Control of Gaseous Effluent Releases	115

HISTORY INFO

TABLE OF CONTENTS (Cont'd)

PART III EFFLUENT DATA AND CALCULATIONAL METHODOLOGIES

Section		Page
5.0	GASEOUS EFFLUENT DOSE ASSESSMENT	129
5.1	Gaseous Effluents - Instantaneous Release Limits	129
5.1.1	Noble Gases	129
5.1.1.1	Total Body	129
5.1.1.2	Skin	130
5.1.2	Iodines and Particulates	131
5.2	Gaseous Effluents - 10 CFR 50 Appendix I	132
5.2.1	Noble Gases	132
5.2.2	Iodines and Particulates	133
5.3	Gaseous Radioactive System Dose Calculations Once per Month	135
5.4	Alternative Dose Calculational Methodologies	136
6.0	GASEOUS EFFLUENT WASTE TREATMENT SYSTEM	158
6.1	Description of the TMI-1 Gaseous Radwaste Treatment System	158
6.2	Operability of the TMI-1 Gaseous Radwaste Treatment System	158
7.0	EFFLUENT TOTAL DOSE ASSESSMENT	160
8.0	TMINS RADIOLOGICAL ENVIRONMENTAL MONITORING PROGRAM (REMP)	161
8.1	Monitoring Program Requirements	161
8.2	Land Use Census	163
8.3	Interlaboratory Comparison Program	165
9.0	PART III REFERENCES	182

HISTORY INFO

TABLE OF CONTENTS (Cont'd)

PART III EFFLUENT DATA AND CALCULATIONAL METHODOLOGIES

Section		Page
TABLES		
Table 1.1	TMI-1 Liquid Release Point and Liquid Radiation Monitor Data	93
Table 1.2	TMI-2 Sump Capacities	94
Table 2.1	Liquid Dose Conversion Factors (DCF): DF_{ij}	100
Table 2.2	Bioaccumulation Factors, BF_i	103
Table 4.1	TMI-1 Gaseous Release Point & Gaseous Radiation Monitor Data	116
Table 4.2	TMI-2 Gaseous Release Point & Gaseous Radiation Monitor Data	117
Table 4.3	Dose Factors for Noble Gases and Daughters	118
Table 4.4	Atmospheric Dispersion Factors for Three Mile Island - Station Vent	119
Table 4.5	Atmospheric Dispersion Factors for Three Mile Island - Ground Release	120
Table 4.6	Dose Parameters for Radioiodines and Radioactive Particulate In Gaseous Effluents	121
Table 5.2.1	Pathway Dose Factors, R_i - Infant, Inhalation	135
Table 5.2.2	Pathway Dose Factors, R_i - Child, Inhalation	136
Table 5.2.3	Pathway Dose Factors, R_i - Teen, Inhalation	137
Table 5.2.4	Pathway Dose Factors, R_i - Adult, Inhalation	138
Table 5.3.1	Pathway Dose Factors, R_i - All Age Groups, Ground Plane	139
Table 5.4.1	Pathway Dose Factors, R_i - Infant, Grass-Cow-Milk	140
Table 5.4.2	Pathway Dose Factors, R_i - Child, Grass-Cow-Milk	141
Table 5.4.3	Pathway Dose Factors, R_i - Teen, Grass-Cow-Milk	142
Table 5.4.4	Pathway Dose Factors, R_i - Adult, Grass-Cow-Milk	143
Table 5.5.1	Pathway Dose Factors, R_i - Infant, Grass-Goat-Milk	144

HISTORY INFO

TABLE OF CONTENTS (Cont'd)

PART III EFFLUENT DATA AND CALCULATIONAL METHODOLOGIES

Section		Page
TABLES		
Table 5.5.2	Pathway Dose Factors, R_i - Child, Grass-Goat-Milk	145
Table 5.5.3	Pathway Dose Factors, R_i - Teen, Grass-Goat-Milk	146
Table 5.5.4	Pathway Dose Factors, R_i - Adult, Grass-Goat-Milk	147
Table 5.6.1	Pathway Dose Factors, R_i - Infant, Grass-Cow-Meat	148
Table 5.6.2	Pathway Dose Factors, R_i - Child, Grass-Cow-Meat	149
Table 5.6.3	Pathway Dose Factors, R_i - Teen, Grass-Cow-Meat	150
Table 5.6.4	Pathway Dose Factors, R_i - Adult, Grass-Cow-Meat	151
Table 5.7.1	Pathway Dose Factors, R_i - Infant, Vegetation	152
Table 5.7.2	Pathway Dose Factors, R_i - Child, Vegetation	153
Table 5.7.3	Pathway Dose Factors, R_i - Teen, Vegetation	154
Table 5.7.4	Pathway Dose Factors, R_i - Adult, Vegetation	155
Table 8.1	Sample Collection and Analysis Requirements	164
Table 8.2	Reporting Levels for Radioactivity Concentrations in Environmental Samples	168
Table 8.3	Detection Capabilities for Environmental Sample Analysis	169
Table 8.4	TMINS REMP Station Locations - Air Particulate and Air Iodine	171
Table 8.5	TMINS REMP Station Locations - Direct Radiation (TLD)	171
Table 8.6	TMINS REMP Station Locations - Surface Water	173
Table 8.7	TMINS REMP Station Locations - Aquatic Sediment	173
Table 8.8	TMINS REMP Station Locations - Milk	174
Table 8.9	TMINS REMP Station Locations - Fish	174
Table 8.10	TMINS REMP Station Locations - Food Products	175

HISTORY INFO

TABLE OF CONTENTS (Cont'd)

PART III EFFLUENT DATA AND CALCULATIONAL METHODOLOGIES

Section		Page
TABLES		
MAP 8.1	Three Mile Island Nuclear Station Locations of Radiological Environmental Monitoring Program Stations within 1 Mile of the Site	176
MAP 8.2	Three Mile Island Nuclear Station Locations of Radiological Environmental Monitoring Program Stations within 5 miles of the Site	177
MAP 8.3	Three Mile Island Nuclear Station Locations of Radiological Environmental Monitoring Program Stations Greater than 5 miles from the Site	178
FIGURES		
Figure 1.1	TMI-1 Liquid Effluent Pathways	95
Figure 1.2	TMI-2 Liquid Effluent Pathways	96
Figure 3.1	TMI-1 Liquid Radwaste	106
Figure 3.2	TMI-1 Liquid Waste Evaporators	107
Figure 4.1	TMI-1 Gaseous Effluent Pathways	122
Figure 4.2	TMI-1 Auxiliary & Fuel Handling Buildings Effluent Pathways	123
Figure 4.3	TMI-1 Reactor Building Effluent Pathway	124
Figure 4.4	TMI-1 Condenser Offgas Effluent Pathway	125
Figure 4.5	TMI-2 Gaseous Effluent Filtration System/Pathways	126
Figure 6.1	Waste Gas System	157

HISTORY INFO

TABLE OF CONTENTS (Cont'd)

PART IV REPORTING REQUIREMENTS

Section		Page
1.0	**TMI ANNUAL RADIOLOGICAL ENVIRONMENTAL OPERATING REPORT**	182
2.0	**TMI ANNUAL RADIOACTIVE EFFLUENT RELEASE REPORT**	183
3.0	**PART IV REFERENCES**	185
APPENDICES		
A.	Pathway Dose Rate Parameter (P_i)	186
B.	Inhalation Pathway Dose Factor (R_i)	187
C.	Ground Plane Pathway Dose Factor (R_i)	188
D.	Grass-Cow-Milk Pathway Dose Factor (R_i)	189
E.	Cow-Meat Pathway Dose Factor (R_i)	191
F.	Vegetation Pathway Dose Factor (R_i)	192
	APPENDIX A - F REFERENCES	193

HISTORY INFO

HISTORY INFO

PART K

TMI-1 RADIOLOGICAL EFFLUENT CONTROLS

1.0 DEFINITIONS

The following terms are defined for uniform interpretation of these controls and surveillances.

1.1 Reactor Operating Conditions

1.1.1 Cold Shutdown

The reactor is in the cold shutdown condition when it is subcritical by at least one percent delta k/k and Tavg is no more than 200°F. Pressure is defined by Technical Specification 3.1.2.

1.1.2 Hot Shutdown

The reactor is in the hot shutdown condition when it is subcritical by at least one percent delta k/k and Tavg is at or greater than 525°F.

1.1.3 Reactor Critical

The reactor is critical when the neutron chain reaction is self-sustaining and Keff = 1.0.

1.1.4 Hot Standby

The reactor is in the hot standby condition when all of the following conditions exist:

a. Tavg is greater than 525°F

b. The reactor is critical

c. Indicated neutron power on the power range channels is less than two percent of rated power. Rated power is defined in Technical Specification Definition 1.1.

1.1.5 Power Operation

The reactor is in a power operating condition when the indicated neutron power is above two percent of rated power as indicated on the power range channels. Rated power is defined in Technical Specification Definition 1.1.

1.1.6 Refueling Shutdown

The reactor is in the refueling shutdown condition when, even with all rods removed, the reactor would be subcritical by at least one percent delta k/k and the coolant temperature at the decay heat removal pump suction is no more than 140°F. Pressure is defined by Technical Specification 3.1.2. A refueling shutdown refers to a shutdown to replace or rearrange all or a portion of the fuel assemblies and/or control rods.

1.1.7 Refueling Operation

An operation involving a change in core geometry by manipulation of fuel or control rods when the reactor vessel head is removed.

HISTORY INFO

1.1.8 *Refueling Interval*

Time between normal refuelings of the reactor. This is defined as once per 24 months.

1.1.9 Startup

The reactor shall be considered in the startup mode when the shutdown margin is reduced with the intent of going critical.

1.1.10 Tave

Tave is defined as the arithmetic average of the coolant temperatures in the hot and cold legs of the loop with the greater number of reactor coolant pumps operating, if such a distinction of loops can be made.

1.1.11 Heatup - Cooldown Mode

The heatup-cooldown mode is the range of reactor coolant temperature greater than 200°F and less than 525°F.

1.2 Operable

A system, subsystem, train, component or device shall be OPERABLE or have OPERABILITY when it is capable of performing its specified function(s) and when all necessary attendant instrumentation, controls, electrical power, cooling or seal water, lubrication or other auxiliary equipment that are required for the system, subsystem, train, component, or device to perform its function(s) are also capable of performing their related support function(s).

1.3 Instrument Channel

An instrument channel is the combination of sensor, wires, amplifiers, and output devices which are connected for the purpose of measuring the value of a process variable for the purpose of observation, control and/or protection. An instrument channel may be either analog or digital.

1.4 *Instrumentation Surveillance*

1.4.1 Channel Test

A CHANNEL TEST shall be the injection of a simulated signal into the channel as close to the sensor as practical to verify OPERABILITY, including alarm and/or trip functions.

1.4.2 Channel Check

A CHANNEL CHECK shall be the qualitative assessment of channel behavior during operation by observation. This determination shall include, where possible, comparison of the channel indication and/or status with other indications and/or status derived from independent instrumentation channels measuring the same parameter.

HISTORY INFO

1.4.3 Source Check

A SOURCE CHECK shall be the qualitative assessment of channel response when the channel sensor is exposed to a radioactive source.

1.4.4 Channel Calibration

An instrument CHANNEL CALIBRATION is a test, and adjustment (if necessary), to establish that the channel output responds with acceptable range and accuracy to known values of the parameter which the channel measures or an accurate simulation of these values. Calibration shall encompass the entire channel, including equipment actuation, alarm, or trip and shall be deemed to include the channel test.

1.5 Dose Equivalent I-131

The DOSE EQUIVALENT I-131 shall be that concentration of I-131 (microcurie/gram) which alone would produce the same thyroid dose as the quantity and isotopic mixture of I-131, I-132, I-133, I-134, and I-135 actually present. The thyroid dose conversion factors used for this calculation shall be those listed in Table III of TID 14844, "Calculation of Distance Factors for Power and Test Reactor Sites". [Or in Table E-7 of NRC Regulatory Guide 1.109, Revision 1, October 1977.]

1.6 Offsite Dose Calculation Manual (ODCM)

The OFFSITE DOSE CALCULATION MANUAL (ODCM) contains the methodology and parameters used in the calculation of offsite doses resulting from radioactive gaseous and liquid effluent, in the calculation of gaseous and liquid effluent monitoring Alarm/Trip Setpoints, and in the conduct of the Radiological Environmental Monitoring Program. The ODCM also contains (1) the Radiological Effluent Controls, (2) the Radiological Environmental Monitoring Program and (3) descriptions of the information that should be included in the Annual Radiological Environmental Operating and Annual Radioactive Effluent Release Reports.

1.7 Gaseous Radwaste Treatment

The GASEOUS RADWASTE TREATMENT SYSTEM is the system designed and installed to reduce radioactive gaseous effluent by collecting primary coolant system off gases from the primary system and providing for delay or holdup for the purpose of reducing the total radioactivity prior to release to the environment.

1.8 Ventilation Exhaust Treatment System

A VENTILATION EXHAUST TREATMENT SYSTEM is any system designed and installed to reduce gaseous radioiodine or radioactive material in particulate form in effluent by passing ventilation or vent exhaust gases through charcoal absorbers and/or HEPA filters for the purpose of removing iodine or particulates from the gaseous exhaust system prior to the release to the environment. Engineered Safety Feature (ESF) atmospheric cleanup systems are not considered to be VENTILATION EXHAUST TREATMENT SYSTEMS.

1.9 Purge - Purging

PURGE or PURGING is the controlled process of discharging air or gas from a confinement to maintain temperature, pressure, humidity, concentration or other operating conditions in such a manner that replacement air or gas is required to purify the confinement.

HISTORY INFO

1.10 Venting

VENTING is the controlled process of discharging air as gas from a confinement to maintain temperature, pressure, humidity, concentration or other operating conditions in such a manner that replacement air or gas is not provided. Vent used in system name does not imply a VENTING process.

1.11 Member(s) of the Public

MEMBER(S) OF THE PUBLIC shall include all persons who are not occupationally associated with the plant. This category does not include employees of the GPU System, GPU contractors or vendors. Also excluded from this category are persons who enter the site to service equipment or to make deliveries.

1.12 Site Boundary

The SITE BOUNDARY used as the basis for the limits on the release of gaseous effluents is as defined in Section 2.1.2.2 and shown on Figure 2.1-3 of the TMI-1 FSAR. This boundary line includes portions of the Susquehanna River surface between the east bank of the river and Three Mile Island and between Three Mile Island and Shelley Island.

The SITE BOUNDARY used as the basis for the limits on the release of liquid effluents is as shown in Figure 1.1 in Part I of this ODCM.

1.13 Frequency Notation

The FREQUENCY NOTATION specified for the performance of Surveillance Requirements shall correspond to the intervals defined in Table 1-1. All Surveillance Requirements shall be performed within the specified time interval with a maximum allowable extension not to exceed 25% of the surveillance interval. The 25% extension applies to all frequency intervals with the exception of "F." No extension is allowed for intervals designated "F."

HISTORY INFO

Table 1-1

Frequency Notation

Notation	Frequency
S	Shiftly (once per 12 hours)
D	Daily (once per 24 hours)
W	Weekly (once per 7 days)
M	Monthly (once per 31 days)
Q	Quarterly (once per 92 days)
S/A	Semi-Annually (once per 184 days)
R	Refueling Interval (once per 24 months)
P S/U	Prior to each reactor startup, if not done during the previous 7 days
P	Completed prior to each release
N/A (NA)	Not applicable
E	Once per 18 months
F	Not to exceed 24 months

Bases

Section 1.13 establishes the limit for which the specified time interval for Surveillance Requirements may be extended. It permits an allowable extension of the normal surveillance interval to facilitate surveillance scheduling and consideration of plant operating conditions that may not be suitable for conducting the surveillance; e.g., transient conditions or other ongoing surveillance or maintenance activities. It also provides flexibility to accommodate the length of a fuel cycle for surveillances that are specified to be performed at least once each REFUELING INTERVAL. It is not intended that this provision be used repeatedly as a convenience to extend surveillance intervals beyond that specified for surveillances that are not performed once each REFUELING INTERVAL. Likewise, it is not the intent that REFUELING INTERVAL surveillances be performed during power operation unless it is consistent with safe plant operation. The limitation of Section 1.13 is based on engineering judgement and the recognition that the most probable result of any particular surveillance being performed is the verification of conformance with the Surveillance Requirements. This provision is sufficient to ensure that the reliability ensured through surveillance activities is not significantly degraded beyond that obtained from the specified surveillance interval.

HISTORY INFO

FIGURE 1.1

Gaseous Effluent Release Points and Liquid Effluent Outfall Locations

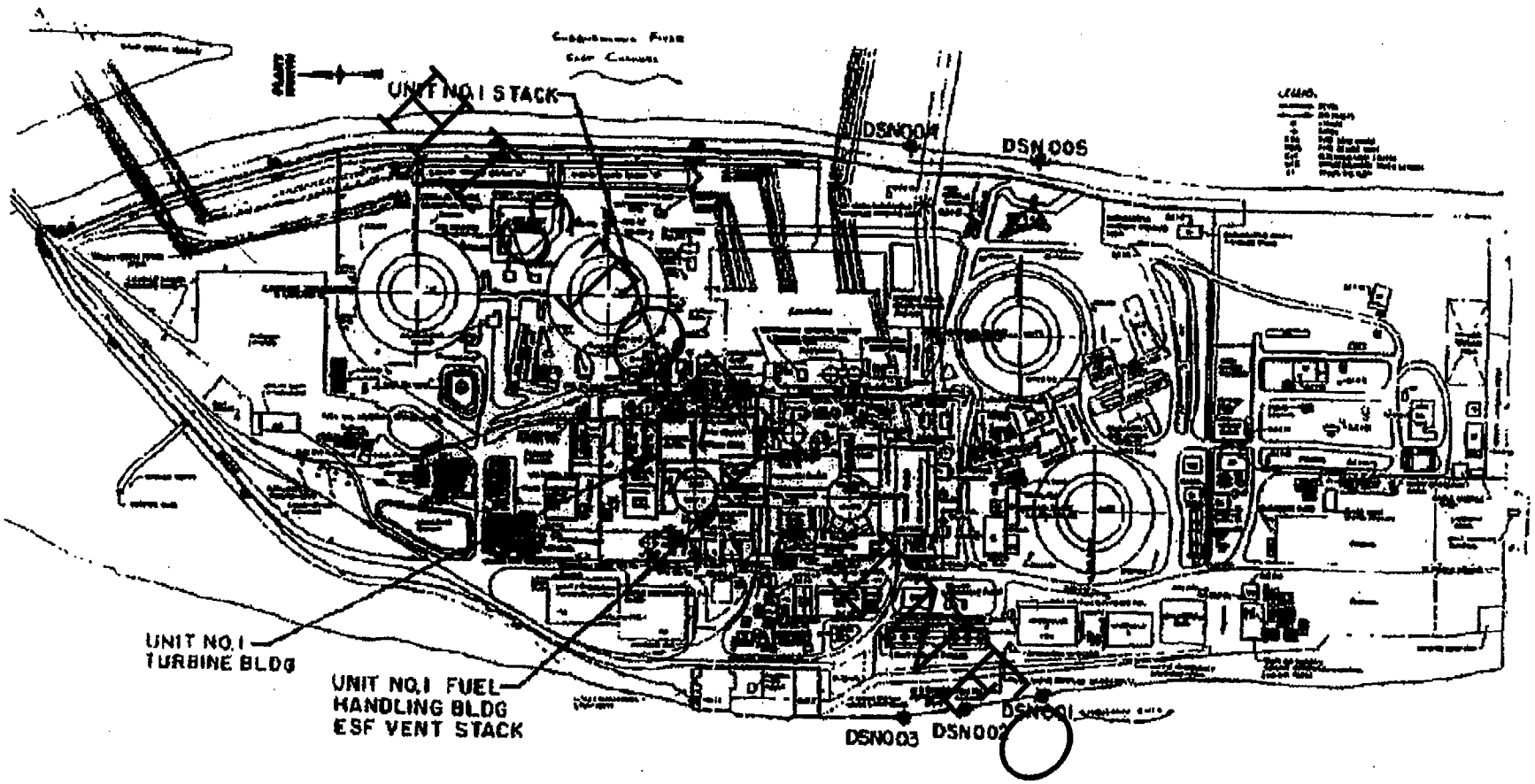

2.0 RADIOLOGICAL EFFLUENT CONTROLS AND BASES

2.1 Radioactive Effluent Instrumentation

2.1.1 Radioactive Liquid Effluent Instrumentation

CONTROL:

The radioactive liquid effluent monitoring instrumentation channels shown in Table 2.1-1 shall be OPERABLE with their alarm/trip setpoints set to ensure that the limits of Control 2.2.1.1 are not exceeded. The alarm/trip setpoints of these channels shall be determined in accordance with the OFFSITE DOSE CALCULATION MANUAL (ODCM).

APPLICABILITY: At all times *

ACTION:

a. With a radioactive liquid effluent monitoring instrumentation channel alarm/trip setpoint less conservative than required by the above control, immediately suspend the release of radioactive liquid effluent monitored by the affected channel or declare the channel inoperable.

b. With less than the minimum number of radioactive liquid effluent monitoring instrumentation channels OPERABLE, take the ACTION shown in Table 2.1-1. Exert best efforts to return the instrumentation to OPERABLE status within 30 days and, if unsuccessful, explain in the next Annual Effluent Release Report why the inoperability was not corrected in a timely manner.

* For FT-84, and RM-L6, operability is not required when discharges are positively controlled through the closure of WDL-V257.

* For RM-L12 and associated IWTS/IWFS flow interlocks, operability is not required when discharges are positively controlled through the closure of IW-V72, 75 and IW-V280, 281.

* For FT-146, operability is not required when discharges are positively controlled through the closure of WDL-V257, IW-V72, 75 and IW-V280, 281.

BASES

The radioactive liquid effluent instrumentation is provided to monitor and control, as applicable, the releases of radioactive materials in liquid effluent during actual or potential releases. The alarm/trip setpoints for these instruments shall be calculated in accordance with NRC approved methods in the ODCM to ensure that the alarm/trip will occur prior to exceeding ten times the effluent concentrations of 10 CFR Part 20.

HISTORY INFO

Table 2.1-1

Radioactive Liquid Effluent Instrumentation

	Instrument	Minimum Channels Operable	ACTION
1.	Gross Radioactivity Monitors Providing Automatic Termination of Release		
	a. Unit 1 Liquid Radwaste Effluent Line (RM-L6)	1	18
	b. IWTS/IWFS Discharge Line (RM-L12)	1	20
2.	Flow Rate Measurement Devices		
	a. Unit 1 Liquid Radwaste Effluent Line (FT-84)	1	21
	b. Station Effluent Discharge (FT-146)	1	21

Table Notation

ACTION 18 With the number of channels OPERABLE less than required by the Minimum Channels OPERABLE requirement, effluent releases may continue, provided that prior to initiating a release:

1. At least two independent samples are analyzed in accordance with Surveillances 3.2.1.1.1 and 3.2.1.1.2 and;
2. At least two technically qualified members of the Unit staff independently verify the release rate calculations and verify the discharge valve lineup.
3. The TMI Plant Manager shall approve each release.

Otherwise, suspend release of radioactive effluents via this pathway.

ACTION 20 With the number of channels OPERABLE less than required by the Minimum Channels OPERABLE requirement, effluent releases via this pathway may commence or continue provided that grab samples are collected and analyzed for gross radioactivity (beta or gamma) at a limit of detection of at least 1×10^{-7} microcuries/ml, prior to initiating a release and at least once per 12 hours during release.

ACTION 21 With the number of channels OPERABLE less than required by the Minimum Channels OPERABLE requirement, radioactive effluent releases via this pathway may continue, provided the flow rate is estimated at least once per 4 hours during actual releases. Pump curves may be used to estimate flow.

HISTORY INFO

2.1.2 Radioactive Gaseous Process and Effluent Monitoring Instrumentation

CONTROL:

The radioactive gaseous process and effluent monitoring instrumentation channels shown in Table 2.1-2 shall be OPERABLE with their alarm/trip setpoints set to ensure that the limits of Control 2.2.2.1 are not exceeded. The alarm/trip setpoints of these channels shall be determined in accordance with the OFFSITE DOSE CALCULATION MANUAL (ODCM).

APPLICABILITY: As shown in Table 2.1-2.

ACTION:

a. With a radioactive gaseous process or effluent monitoring instrumentation channel alarm/trip setpoint less conservative than required by the above control, immediately suspend the release of radioactive effluent monitored by the affected channel or declare the channel inoperable.

b. With less than the minimum number of radioactive gaseous process or effluent monitoring instrumentation channels OPERABLE, take the ACTION shown in Table 2.1-2. Exert best efforts to return the instrumentation to OPERABLE status within 30 days and, if unsuccessful, explain in the next Annual Effluent Release Report why the inoperability was not corrected in a timely manner.

BASES

The radioactive gaseous effluent instrumentation is provided to monitor and control, as applicable, the releases of radioactive materials in gaseous effluent during actual or potential releases. The alarm/trip setpoints for these instruments shall be calculated in accordance with NRC approved methods in the ODCM to provide reasonable assurance that the annual releases are within the limits specified in 10 CFR 20.1301.

The low range condenser offgas noble gas activity monitors also provide data for determination of steam generator primary to secondary leakage rate. Channel operability requirements are based on an ASLB Order No. LBP-84-47 dated October 31, 1984, and as cited in 20 NRC 1405 (1984).

HISTORY INFO

Table 2.1-2

Radioactive Gaseous Process and Effluent Monitoring Instrumentation

	INSTRUMENT	MINIMUM CHANNELS OPERABLE	APPLICABILITY	ACTION
1.	Waste Gas Holdup System			
a.	Noble Gas Activity Monitor (RM-A7)	1	***	25
b.	Effluent System Flow Rate Measuring Device (FT-123)	1	***	26
2.	Waste Gas Holdup System Explosive Gas Monitoring System			
a.	Hydrogen Monitor	2	**	30
b.	Oxygen Monitor	2	**	30
3.	Containment Purge Monitoring System			
a.	Noble Gas Activity Monitor (RM-A9)	1	#	27
b.	Iodine Sampler (RM-A9)	1	#	31
c.	Particulate Sampler (RM-A9)	1	#	31
d.	Effluent System Flow Rate Measuring Device (FR-148)	1	#	26
e.	Sampler Flow Rate Monitor	1	#	26

HISTORY INFO

Table 2.1-2 (Cont'd)

Radioactive Gaseous Process and Effluent Monitoring Instrumentation

INSTRUMENT	MINIMUM CHANNELS OPERABLE	APPLICABILITY	ACTION
4. Condenser Vent System			
a. Low Range Noble Gas Activity Monitor (RM-A5Lo and Suitable Equivalent)	2(1)	##	32

NOTE (1): For one of the channels, an operable channel may be defined for purposes of this control and 3.1.2.1 only as a suitable equivalent monitoring system capable of being placed in service within one hour. A suitable equivalent system shall include instrumentation with comparable sensitivity and response time to the RM-A5Lo monitoring channel. When the equivalent monitoring system is in service, indication will be continuously available to the operator, either through indication and alarm in the Control Room or through communication with a designated individual continuously observing local indication.

HISTORY INFO

Table 2.1-2 (Cont'd)

Radioactive Gaseous Process and Effluent Monitoring Instrumentation

	INSTRUMENT	MINIMUM CHANNELS OPERABLE	APPLICABILITY	ACTION
5.	Auxiliary and Fuel Handling Building Ventilation System			
a.	Noble Gas Activity Monitor (RM-A8) or (RM-A4 and RM-A6)	1	*	27
b.	Iodine Samples (RM-A8) or (RM-A4 and RM-A6)	1	*	31
c.	Particulate Sampler (RM-A8) or (RM-A4 and RM-A6)	1	*	31
d.	Effluent System Flow Rate Measuring Devices (FR-149 and FR-150)	1	*	26
e.	Sampler Flow Rate Monitor	1	*	26
6.	Fuel Handling Building ESF Air Treatment System			
a.	Noble Gas Activity Monitor (RM-A14 or Suitable Equivalent)	1	****	27, 33
b.	Iodine Cartridge	N/A(2)	****	31, 33
c.	Particulate Filter	N/A(2)	****	31, 33
d.	Effluent System Flow (UR-1104A/B)	1	****	26, 33
e.	Sampler Flow Rate Monitor	1	****	26, 33

NOTE 2: No instrumentation channel is provided. However, for determining operability, the equipment named must be installed and functional or the ACTION applies.

HISTORY INFO

Table 2.1-2 (Cont'd)

Radioactive Gaseous Process and Effluent Monitoring Instrumentation

	INSTRUMENT	MINIMUM CHANNELS OPERABLE	APPLICABILITY	ACTION
7.	Chemical Cleaning Building Ventilation System			
	a. Noble Gas Activity Monitor (ALC RM-I-18)	1[3]	###	27
	b. Iodine Sampler (ALC RM-I-18)	1[3]	###	31
	c. Particulate Sampler (ALC RM-I-18)	1	###	31
8.	Waste Handling and Packaging Facility Ventilation System			
	a. Particulate Sampler (WHP-RIT-1)	1	###	31
9.	Respirator and Laundry Maintenance Facility Ventilation System			
	a. Particulate Sampler (RLM-RM-1)	1	###	31

NOTE 3: Channel only required when liquid radwaste is moved or processed within the facility.

HISTORY INFO

Table 2.1-2

Table Notation

* At all times.
** During waste gas holdup system operation.
*** Operability is not required when discharges are positively controlled through the closure of WDG-V47 and where RM-A8 (or RM-A4 and RM-A6), FT-149, and FT-150 are operable.
**** During Fuel Handling Building ESF Air Treatment System Operation.
\# At all times during containment purging.
\#\# At all times when condenser vacuum is established.
\#\#\# During operation of the ventilation system.

ACTION 25 With the number of channels OPERABLE less than required by the Minimum Channels OPERABLE requirement, the contents of the tank may be released to the environment provided that prior to initiating the release:

1. At least two independent samples of the tank's contents are analyzed in accordance with Table 3.2-2, Item A, and

2. At least two technically qualified members of the Unit staff independently verify the release rate calculations and verify the discharge valve lineup.

3. The TMI Plant Manager shall approve each release.

Otherwise, suspend release of radioactive effluent via this pathway.

ACTION 26 With the number of channels OPERABLE less than required by the Minimum Channels OPERABLE requirement, effluent releases via this pathway may continue provided the flow rate is estimated at least once per 4 hours.

ACTION 27 With the number of channels OPERABLE less than required by the Minimum Channels OPERABLE requirement, effluent releases via this pathway may continue provided grab samples are taken at least once per 12 hours and the initial samples are analyzed for gross activity (gamma scan) within 24 hours after the channel has been declared inoperable. If RM-A9 is declared inoperable, see also Technical Specification 3.5.1, Table 3-5.1, Item C.3.f.

ACTION 30 1. With the number of channels OPERABLE less than required by the Minimum Channels OPERABLE requirement, a grab sample shall be collected and analyzed for the inoperable gas channel(s) at least once per 24 hours. With both channels inoperable, a grab sample shall be collected and analyzed for the inoperable gas channel(s):

(a) at least once per 4 hours during degassing operations.

(b) at least once per 24 hours during other operations (e.g. Feed and Bleed).

HISTORY INFO

Table 2.1-2

2. If the inoperable gas channel(s) is not restored to service within 14 days, a special report shall be submitted to the Regional Administrator of the NRC Region I Office and a copy to the Director, Office of Inspection and Enforcement within 30 days of declaring the channel(s) inoperable. The report shall describe (a) the cause of the monitor inoperability, (b) action being taken to restore the instrument to service, and (c) action to be taken to prevent recurrence.

ACTION 31 With the number of channels OPERABLE less than required by the Minimum Channels OPERABLE requirement, effluent releases via this pathway may continue provided that within four hours after the channel has been declared inoperable, samples are continuously collected with auxiliary sampling equipment.

ACTION 32 With the number of channels OPERABLE less than required by the Minimum Channels OPERABLE requirement, effluent releases via this pathway may continue for up to 28 days, provided that one OPERABLE channel remains in service or is placed in service within 1 hour. **After 28 days, or if one OPERABLE channel does not remain in service or is not placed in service within 1 hour, the provisions of *Technical Specification* 3.0.1 *apply, as if this control were a Tech Spec* Limiting Condition for Operation.**

ACTION 33 With the number of channels OPERABLE less than required by the Minimum Channels OPERABLE requirement, either restore the inoperable channel to OPERABLE status within 7 days, or prepare and submit a special report within 30 days outlining the action(s) taken, the cause of the inoperability, and plans and schedule for restoring the system to OPERABLE status.

HISTORY INFO

2.2 Radioactive Effluent Controls

2.2.1 Liquid Effluent Controls

2.2.1.1 Liquid Effluent Concentration

CONTROL:

The concentration of radioactive material released at anytime from the unit to unrestricted areas shall be limited to ten times the concentrations specified in 10 CFR Part 20.1001-20.2401, Appendix B, Table 2, Column 2 for radionuclides other than dissolved or entrained noble gases. For dissolved or entrained noble gases, the concentration shall be limited to 2×10^{-3} uCi/cc total activity.

APPLICABILITY: At all times

ACTION:

With the concentration of radioactive material released from the unit to unrestricted areas exceeding the above limits, immediately restore concentrations within the above limits.

BASES

This control is provided to ensure that the concentration of radioactive materials released in liquid waste effluent from the unit to unrestricted areas will be less than ten times the concentration levels specified in 10 CFR Part 20.1001-20.2401, Appendix B, Table 2. This limitation provides additional assurance that the levels of radioactive materials in bodies of water outside the site will not result in exposures with (1) the Section II.A design objectives of Appendix I, 10 CFR Part 50, to a MEMBER OF THE PUBLIC and (2) the limits of 10 CFR Part 20.1301 to the population. The concentration limit for noble gases is based upon the assumption the Xe-135 is the controlling radioisotope and its MPC in air (submersion) was converted to an equivalent concentration in water using the methods described in International Commission on Radiological Protection (ICRP) Publication 2.

2.2.1.2 Liquid Effluent Dose

CONTROL

The dose or dose commitment to a MEMBER OF THE PUBLIC from radioactive materials in liquid effluents released from the unit to the SITE BOUNDARY shall be limited:

a. During any calendar quarter to less than or equal to 1.5 mrem to the total body and to less than or equal to 5 mrem to any organ.

b. During any calendar year to less than or equal to 3 mrem to the total body and to less than or equal to 10 mrem to any organ.

HISTORY INFO

APPLICABILITY: At all times

ACTION:

a. With the calculated dose from the release of radioactive materials in liquid effluents exceeding any of the above limits, prepare and submit to the NRC Region I Administrator within 30 days, a Special Report which identifies the cause(s) for exceeding the limit(s) and defines the corrective actions to be taken to reduce the releases of radioactive materials in liquid effluents during the remainder of the current calendar quarter and during the subsequent 3 calendar quarters so that the cumulative dose or dose commitment to any individual from such releases during these four calendar quarters is within 3 mrem to the total body and 10 mrem to any organ. This Special Report shall also include (1) the result of radiological analyses of the drinking water source, and (2) the radiological impact on finished drinking water supplies with regard to the requirements of 40 CFR 141, Safe Drinking Water Act.

BASES

This control and associated action is provided to implement the requirements of Sections II.A, III.A, and IV.A of Appendix I, 10 CFR Part 50. The Control implements the guides set forth in Section II.A of Appendix I. The ACTION statements provide the required operating flexibility and at the same time implement the guides set forth in Section IV.A of Appendix I to assure that the releases of radioactive material in liquid effluents will be kept "as low as is reasonably achievable". Also, for fresh water sites with drinking water supplies which can be potentially affected by plant operations, there is reasonable assurance that the operation of the facility will not result in radionuclide concentrations in the finished drinking water that are in excess of the requirements of 10 CFR 20. The dose calculations in the ODCM implement The requirements in Section III.A. of Appendix I that conformance with the guides of Appendix I is to be shown by calculational procedures based on models and data such that the actual exposure of a MEMBER OF THE PUBLIC through appropriate pathways is unlikely to be substantially underestimated. The equations specified in the ODCM for calculating the doses due to the actual release rates of radioactive materials in liquid effluents are consistent with the methodology provided in Regulatory Guide 1.109, "Calculation of Annual Doses to Man from Routine Releases of Reactor Effluents for the Purpose of Evaluating Compliance with 10 CFR Part 50, Appendix I," Revision 1, October, 1977, and Regulatory Guide 1.113, "Estimating Aquatic Dispersion of Effluents from Accidental and Routine Reactor Releases for the Purpose of Implementing Appendix I," April, 1977. NUREG-0133 provides methods for dose calculations consistent with Regulatory Guides 1.109 and 1.113.

HISTORY INFO

2.2.1.3 Liquid Radwaste Treatment System

CONTROL:

The appropriate portions of the liquid radwaste treatment system shall be used to reduce the radioactive materials in liquid wastes prior to their discharge when the projected doses due to the liquid effluent from the unit to unrestricted areas would exceed 0.06 mrem to the total body or 0.2 mrem to any organ in any calendar month.

APPLICABILITY: At all times

ACTION:

a. With radioactive liquid waste being discharged without treatment and in excess of the above limits, prepare and submit to the NRC Region I Administrator within 30 days, a Special Report which includes the following information:

1. Explanation of why liquid radwaste was being discharged without treatment, identification of any inoperable equipment or subsystems, and the reason for inoperability,

2. Action(s) taken to restore the inoperable equipment to OPERABLE status, and,

3. A summary description of action(s) taken to prevent a recurrence.

BASES

The requirement that the appropriate portions of this system be used, when specified, provides assurance that the releases of radioactive materials in liquid effluents will be kept as low as is reasonably achievable. This control implements the requirements of 10 CFR Part 50.36a, General Design Criterion 60 of Appendix A to 10 CFR Part 50 and the design objective given in Section II.D of Appendix I to 10 CFR Part 50. The intent of Section II.D. is to reduce effluents to as low as is reasonably achievable in a cost effective manner. This control satisfies this intent by establishing a dose limit which is a small fraction (25%) of Section II.A of Appendix I, 10 CFR Part 50 dose requirements. This margin, a factor of 4, constitutes a reasonable reduction.

HISTORY INFO

2.2.1.4 Liquid Holdup Tanks

CONTROL

The quantity of radioactive material contained in each of the following tanks shall be limited to less than or equal to 10 curies, excluding tritium and dissolved or entrained noble gases.

a. Outside temporary tank

APPLICABILITY: At all times.

ACTION:

a. With the quantity of radioactive material in any of the above listed tanks exceeding the above limit, immediately suspend all additions of radioactive material to the tank and within 48 hours reduce the tank contents to within the limit.

BASES

Restricting the quantity of radioactive material contained in the specified tanks provides assurance that in the event of an uncontrolled release of the tanks' contents, the resulting concentrations would be less than the limits of 10 CFR Part 20.1001-20-2401, Appendix B, Table 2, Column 2, at the nearest potable water supply and the nearest surface water supply in an unrestricted area.

2.2.2 Gaseous Effluent Controls

2.2.2.1 Gaseous Effluent Dose Rate

CONTROL:

The dose rate due to radioactive materials released in gaseous effluent from the site shall be limited to the following:

a. For noble gases: less than or equal to 500 mrem/yr to the total body and less than or equal to 3000 mrem/yr to the skin, and

b. For I-131, I-133, tritium and all radionuclides in particulate form with half lives greater than 8 days: less than or equal to 1500 mrem/yr to any organ.

APPLICABILITY: At all times.

ACTION:

With the release rate(s) exceeding the above limits, immediately decrease the release rate to comply with the above limit(s).

HISTORY INFO

BASES

The control provides reasonable assurance that the annual dose at the SITE BOUNDARY from gaseous effluent from all units on the site will be within the annual dose limits of 10 CFR Part 20 for unrestricted areas while providing sufficient operational flexibility in establishing effluent monitor setpoints. These gaseous release rates provide reasonable assurance that radioactive material discharged in gaseous effluent will not result in the exposure of a MEMBER OF THE PUBLIC in an unrestricted area, either within or outside the SITE BOUNDARY, to annual average concentrations exceeding the values specified in Appendix B, Table 2 of 10 CFR Part 20. For MEMBERS OF THE PUBLIC who may at times be within the SITE BOUNDARY, the occupancy of the MEMBER OF THE PUBLIC will be sufficiently low to compensate for any increase in the atmospheric diffusion factor above that for the exclusion area boundary. The specified release rate limits restrict, at all times, the corresponding gamma and beta dose rates above background to a MEMBER OF THE PUBLIC at or beyond the SITE BOUNDARY to less than or equal to 500 mrem/year to the total body or to less than or equal to 3000 mrem/year to the skin. These release rate limits also restrict, at all times, the corresponding thyroid dose rate above background to a child via the inhalation pathway to less than or equal to 1500 mrem/year (NUREG 0133).

2.2.2.2 Gaseous Effluents Dose-Noble Gases

CONTROL:

The air dose due to noble gases released in gaseous effluents from the unit to areas at and beyond the SITE BOUNDARY shall be limited to the following:

a. During any calendar quarter: less than or equal to 5 mrad for gamma radiation and less than or equal to 10 mrad for beta radiation and,

b. During any calendar year: less than or equal to 10 mrad for gamma radiation and less than or equal to 20 mrad for beta radiation.

APPLICABILITY: At all times.

ACTION:

a. With the calculated air dose from radioactive noble gases in gaseous effluents exceeding any of the above limits, prepare and submit to the NRC Region I Administrator within 30 days, a Special Report which identifies the cause(s) for exceeding the limit(s) and defines the corrective actions that have been taken to reduce the releases and the proposed corrective actions to be taken to assure that subsequent releases will be in compliance with the above limits.

HISTORY

BASES

This control applies to the release of radioactive materials in gaseous effluents from TMI-1.

This control and associated action is provided to implement the requirements of Section II.B, III.A and IV.A of Appendix I, 10 CFR Part 50. The Control implements the guides set forth in Section II.B of Appendix I. The ACTION statements provide the required operating flexibility and at the same time implement the guides set forth in Section IV.A of Appendix I to assure that the releases of radioactive material in gaseous effluents will be kept "as low as is reasonably achievable." The Surveillance Requirements implement the requirements in Section III.A of Appendix I that conformance with the guides of Appendix I be shown by calculational procedures based on models and data such that the actual exposure of a MEMBER OF THE PUBLIC through the appropriate pathways is unlikely to be substantially underestimated. The dose calculation methodology and parameters established in the ODCM for calculating the doses due to the actual release rates of radioactive noble gases in gaseous effluents are consistent with the methodology provided in Regulatory Guide 1.109, "Calculation of Annual Doses to Man from Routine Release of Reactor Effluents for the Purpose of Evaluating Compliance with *10 CFR Part 50, Appendix I," Revision 1, October 1977 and Regulatory* Guide 1.111, "Methods for Estimating Atmospheric Transport and Dispersion of Gaseous Effluents in Routine Releases from Light-Water Cooled *Reactors," Revision 1, July 1977.* The ODCM equations provided for determining the air doses at and beyond the SITE BOUNDARY are based upon the historical average atmospheric conditions. NUREG-0133 provides methods for dose calculations consistent with Regulatory Guides 1.109 and 1.111.

2.2.2.3 Dose - Iodine-131, Iodine-133, Tritium, and Radionuclides In Particulate Form

CONTROL:

The dose to a MEMBER OF THE PUBLIC from Iodine-131, Iodine-133, Tritium, and all radionuclides in particulate form with half lives greater than 8 days, in gaseous effluents released from the unit to areas at and beyond the SITE BOUNDARY shall be limited to the following:

a. During any calendar quarter: less than or equal to 7.5 mrem to any organ, and

b. During any calendar year: less than or equal to 15 mrem to any organ.

APPLICABILITY: At all times.

HISTORY

ACTION:

With the calculated dose from the release of Iodine-131, Iodine-133, Tritium, and radionuclides in particulate form with half lives greater than 8 days, in gaseous effluents exceeding any of the above limits, prepare and submit to the NRC Region I Administrator within 30 days, a Special Report which identifies the cause(s) for exceeding the limit and defines the corrective actions that have been taken to reduce the releases and the proposed corrective actions to be taken to assure that subsequent releases will be in compliance with the above limits.

BASES

This control applies to the release of radioactive materials in gaseous effluents from TMI-1.

This control and associated action is provided to implement the requirements of Section II.C, III.A and IV.A of Appendix I, 10 CFR Part 50. The Controls are the guides set forth in Section II.C of Appendix I. The ACTION statement provides the required operating flexibility and at the same time implements the guides set forth in Section IV.A of Appendix I to assure that the releases of radioactive materials in gaseous effluents will be kept "as low as is reasonably achievable." The ODCM calculational methods specified in the surveillance requirements implement the requirements in Section III.A of Appendix I that conformance with the guides of Appendix I be shown by calculational procedures based on models and data such that the actual exposure of a MEMBER OF THE PUBLIC through appropriate pathways is unlikely to be substantially underestimated. The ODCM calculational methodology and parameters for calculating the doses due to the actual release rates of the subject materials are consistent with the methodology provided in Regulatory Guide 1.109, "Calculation of Annual Doses to Man from Routine Releases of Reactor Effluents for the Purpose of Evaluating Compliance with 10 CFR Part 50, Appendix I," Revision 1, October, 1977 and Regulatory Guide 1.111, "Methods for Estimating Atmospheric Transport and Dispersion of Gaseous Effluents in Routine Releases from Light-Water-Cooled Reactors," Revision 1, July, 1977. These equations also provide for determining the actual doses based upon the historical average atmospheric conditions. The release rate controls for iodine-131, iodine-133, tritium and radionuclides in particulate form with half lives greater than 8 days are dependent upon the existing radionuclide pathways to man, in areas at and beyond the SITE BOUNDARY. The pathways that were examined in the development of these calculations were: 1) individual inhalation of airborne radionuclides, 2) deposition of radionuclides onto green leafy vegetation with subsequent consumption by man, 3) deposition onto grassy areas where milk animals and meat producing animals graze with consumption of the milk and meat by man, and 4) deposition on the ground with subsequent exposure of man.

HISTORY ONLY

2.2.2.4 Gaseous Radwaste Treatment System

CONTROL

The GASEOUS RADWASTE TREATMENT SYSTEM and the VENTILATION EXHAUST TREATMENT SYSTEM shall be OPERABLE. The appropriate portions of the GASEOUS RADWASTE TREATMENT SYSTEM shall be used to reduce radioactive materials in the gaseous waste prior to their discharge when the monthly projected gaseous effluent air doses due to untreated gaseous effluent releases from the unit would exceed 0.2 mrad for gamma radiation and 0.4 mrad for beta radiation. The appropriate portions of the VENTILATION EXHAUST TREATMENT SYSTEM shall be used to reduce radioactive materials in gaseous waste prior to their discharge when the monthly projected doses due to gaseous effluent releases from the site would exceed 0.3 mrem to any organ.

APPLICABILITY: At all times.

ACTION:

a. With the GASEOUS RADWASTE TREATMENT SYSTEM and/or the VENTILATION EXHAUST TREATMENT SYSTEM inoperable for more than a month or with gaseous waste being discharged without treatment and in excess of the above limits, prepare and submit to the NRC Region I Administrator within 30 days, a Special Report which includes the following information:

1. Identification of the inoperable equipment or subsystems and the reason for inoperability,

2. Action(s) taken to restore the inoperable equipment to OPERABLE status, and

3. A summary description of action(s) taken to prevent a recurrence.

BASES

The use of the GASEOUS RADWASTE TREATMENT SYSTEM and the VENTILATION EXHAUST TREATMENT SYSTEM ensures that gaseous effluents are treated as appropriate prior to release to the environment. The appropriate portions of this system provide reasonable assurance that the releases of radioactive materials in gaseous effluents will be kept "as low as is reasonably achievable." This control implements the requirements of 10 CFR Part 50.36a, General Design Criterion 60 of Appendix A to 10 CFR Part 50, and the design objectives given in Section II.D of Appendix I to 10 CFR Part 50. The specified limits governing the use of appropriate portions of the systems were specified as a suitable fraction of the guide set forth in Sections II.B and II.C of Appendix I, 10 CFR Part 50, for gaseous effluents.

HISTORICAL INFO

2.2.2.5 Explosive Gas Mixture

CONTROL

The concentration of oxygen in the Waste Gas Holdup System shall be limited to less than or equal to 2% by volume whenever the concentration of hydrogen in the Waste Gas Holdup System is greater than or equal to 4% by volume.

AVAILABILITY: At all times.

ACTION:

Whenever the concentration of hydrogen in the Waste Gas Holdup System is greater than or equal to 4% by volume, and:

a. The concentration of oxygen in the Waste Gas Holdup System is greater than 2% by volume, but less than 4% by volume, without delay begin to reduce the oxygen concentration to within its limit.

b. The concentration of oxygen in the Waste Gas Holdup System is greater than or equal to 4% by volume, immediately suspend additions of waste gas to the Waste Gas Holdup System and without delay begin to reduce the oxygen concentration to within its limit.

BASES:

Based on experimental data (Reference 1), lower limits of flammability for hydrogen is 5% and for oxygen is 5% by volume. Therefore, if the concentration of either gas is kept below it lower limit, the other gas may be present in higher amounts without the danger of an explosive mixture. Maintaining the concentrations of hydrogen and oxygen such that an explosive mixture does not occur in the waste gas holdup system provides assurance that the release of radioactive materials will be controlled in conformance with the requirements of General Design Criterion 60 of Appendix A to 10 CFR 50.

REFERENCES

(1) Bulletin 503, Bureau of Mines; Limits of Flammability of Gases and Vapors.

HISTORY INFO

2.2.2.6 Waste Gas Decay Tanks

CONTROL:

The quantity of radioactivity contained in each waste gas decay tank shall be limited to less than or equal to 8800 curies noble gases (considered as Xe-133).

APPLICABILITY: At all times.

ACTION:

a. With the quantity of radioactive material in any waste gas decay tank exceeding the above limit, immediately suspend all additions of radioactive material to the tank and within 48 hours reduce the tank contents to within the limit.

BASES

Restricting the quantity of radioactivity contained in each waste gas decay tank provides assurance that in the event of an uncontrolled release of the tanks contents, the resulting total body exposure to a MEMBER OF THE PUBLIC at the nearest exclusion area boundary will not exceed 0.5 rem. This is consistent with Standard Review Plan 15.7.1, "Waste Gas System Failure."

2.2.3 Total Radioactive Effluent Controls

2.2.3.1 Total Dose

CONTROL:

The annual (calendar year) dose or dose commitment to any MEMBER OF THE PUBLIC, due to releases of radioactivity and to radiation from uranium fuel cycle sources shall be limited to less than or equal to 25 mrem to the total body or any organ except the thyroid, which shall be limited to less than or equal to 75 mrem.

APPLICABILITY: At all times.

ACTION:

With the calculated dose from the release of radioactive materials in liquid or gaseous effluents exceeding twice the limits of Controls 2.2.1.2.a, 2.2.1.2.b, 2.2.2.2.a, 2.2.2.2.b, 2.2.2.3.a, or, 2.2.2.3.b, calculations should be made including direct radiation contributions from the unit and from outside storage tanks to determine whether the above limits of Control 2.2.3.1 have been exceeded. If such is the case, prepare and submit to the NRC Region I Administrator within 30 days, a Special Report which defines the corrective action to be taken to reduce subsequent releases to prevent recurrence of exceeding the above limits and includes the schedule for achieving conformance with the above limits. This Special Report, as defined in

HISTORY INFO

10 CFR Part 20.2203(b), shall include an analysis which estimates the radiation exposure (dose) to a MEMBER OF THE PUBLIC from uranium fuel cycle sources, including all effluent pathways and direct radiation, for the calendar year that includes the release(s) covered by this report. It shall also describe levels of radiation and concentrations of radioactive material involved, and the cause of the exposure levels or concentrations. If the estimated dose(s) exceed the above limits, and if the release condition resulting in violation of 40 CFR 190 has not already been corrected, the Special Report shall include a request for a variance in accordance with the provisions of 40 CFR 190. Submittal of the report is considered a timely request, and a variance is granted until staff action on the request is complete.

BASES

This control is provided to meet the dose limitations of 40 CFR Part 190 that have been incorporated into 10 CFR Part 20.1301(d). This control requires the preparation and submittal of a Special Report whenever the calculated doses from plant generated radioactive effluents and direct radiation exceed 25 mrem to the total body or any organ, except the thyroid, which shall be limited to less than or equal to 75 mrem. For sites containing up to 4 reactors, it is highly unlikely that the resultant dose to a MEMBER OF THE PUBLIC will exceed the dose limits of 40 CFR Part 190 if the individual reactors remain within twice the dose design objectives of Appendix I, and if direct radiation doses from the reactor units and outside storage tanks are kept small. The Special Report will describe a course of action that should result in the limitation of the annual dose to a MEMBER OF THE PUBLIC to within the 40 CFR Part 190 limits. For the purposes of the Special Report, it may be assumed that the dose commitment to the member of the public from other uranium fuel cycle sources is negligible, with the exception that dose contributions from other nuclear fuel cycle facilities at the same site or within a radius of 8 km must be considered. If the dose to any member of the public is estimated to exceed the requirements of 40 CFR Part 190, the Special Report with a request for a variance (provided the release conditions resulting in violation of 40 CFR Part 190 have not already been corrected), in accordance with the provisions of 40 CFR Part 190.11 and 10 CFR Part 20.2203(b), is considered to be a timely request and fulfills the requirements of 40 CFR Part 190 until NRC staff action is completed. The variance only relates to the limits of 40 CFR Part 190, and does not apply in any way to the other requirements for dose limitation of 10 CFR Part 20, as addressed in Controls 2.2.1.1 and 2.2.2.1. An individual is not considered a MEMBER OF THE PUBLIC during any period in which he/she is engaged in carrying out any operation that is part of the nuclear fuel cycle.

HISTORY INFO

3.0 **SURVEILLANCES**

3.1 Radioactive Effluent Instrumentation

3.1.1 Radioactive Liquid Effluent Instrumentation

Surveillance Requirements

3.1.1.1 Each radioactive liquid effluent monitoring instrumentation channel shall be demonstrated OPERABLE by performance of the CHANNEL CHECK, SOURCE CHECK, CHANNEL CALIBRATION, AND CHANNEL TEST operations during the MODES and at the frequencies shown in Table 3.1-1.

HISTORY INFO

Table 3.1-1

Radioactive Liquid Effluent Monitoring Instrumentation Surveillance Requirements

	INSTRUMENT	CHANNEL CHECK	SOURCE CHECK	CHANNEL CALIBRATION	CHANNEL TEST
1.	Radioactivity Monitors Providing Alarm and Automatic Isolation				
a.	Unit 1 Liquid Radwaste Effluents Line (RM-L-6)	D	P	R(2)	Q(1)
b.	IWTS/IWFS Discharge Line (RM-L-12)	D	P	R(2)	Q(1)
2.	Flow Rate Monitors				
a.	Unit 1 Liquid Radwaste Effluent Line (FT-84)	D(3)	N/A	R	Q
b.	Station Effluent Discharge (FT-146)	D(3)	N/A	R	Q

HISTORY INFO

Table 3.1-1

Table Notation

(1) The CHANNEL TEST shall also demonstrate that automatic isolation of this pathway and control room alarm annunciation occurs if the following condition exists:

1. Instrument indicates measured levels above the high alarm/trip setpoint. (Includes - circuit failure)

2. Instrument indicates a down scale failure. (Alarm function only.) (Includes - circuit failure)

3. Instrument controls moved from the operate mode (Alarm function only).

(2) The initial CHANNEL CALIBRATION for radioactivity measurement instrumentation shall be performed using one or more of the reference standards certified by the National Institute of Standards and Technology or using standards that have been obtained from suppliers that participated in measurement assurance activities with NIST. These standards should permit calibrating the system over its intended range of energy and measurement range. For subsequent CHANNEL CALIBRATION, sources that have been related to the initial calibration should be used. (Operating plants may substitute previously established calibration procedures for this requirement)

(3) CHANNEL CHECK shall consist of verifying indication of flow during periods of release. CHANNEL CHECK shall be made at least once daily on any day on which continuous, periodic, or batch releases are made.

HISTORY ONLY

3.1.2 Radioactive Gaseous Process and Effluent Monitoring Instrumentation

Surveillance Requirements

3.1.2.1 Each radioactive gaseous process or effluent monitoring instrumentation channel shall be demonstrated OPERABLE by performance of the CHANNEL CHECK, SOURCE CHECK, CHANNEL CALIBRATION, and CHANNEL TEST operations at the frequencies shown in Table 3.1-2.

HISTORY INFO

Table 3.1-2

Radioactive Gaseous Process and Effluent Monitoring Instrumentation Surveillance Requirements

	INSTRUMENT	CHANNEL CHECK	SOURCE CHECK	CHANNEL CALIBRATION	CHANNEL TEST	APPLICABILITY
1.	Waste Gas Holdup System					
a.	Noble Gas Activity Monitor (RM-A7)	P	P	E(3)	Q(1)	***
b.	Effluent System Flow Rate Measuring Device (FT-123)	P	N/A	E	Q	***
2.	Waste Gas Holdup System Explosive Gas Monitoring System					
a.	Hydrogen Monitor	D	N/A	Q(4)	M	**
b.	Oxygen Monitor	D	N/A	Q(5)	M	**
3.	Containment Purge Vent System					
a.	Noble Gas Activity Monitor (RM-A9)	D	P	E(3)	M(1)	#
b.	Iodine Sampler (RM-A9)	W	N/A	N/A	N/A	#
c.	Particulate Sampler (RM-A9)	W	N/A	N/A	N/A	#
d.	Effluent System Flow Rate Measuring Device (FR-148)	D	N/A	E	Q	#
e.	Sampler Flow Rate Monitor	D	N/A	E	N/A	#
4.	Condenser Vent System					
a.	Noble Gas Activity Monitor (RM-A5 and Suitable Equivalent - See Table 2.1-2, Item 4.a)	D	M	E(3)	Q(2)	##

HISTORY INFO

Table 3.1-2

Radioactive Gaseous Process and Effluent Monitoring Instrumentation Surveillance Requirements

	INSTRUMENT	CHANNEL CHECK	SOURCE CHECK	CHANNEL CALIBRATION	CHANNEL TEST	APPLICABILITY
5.	Auxiliary and Fuel Handling Building Ventilation System					
a.	Noble Gas Activity Monitor (RM-A8) or (RM-A4 and RM-A6)	D	M	E(3)	Q(1)	*
b.	Iodine Sampler (RM-A8) or (RM-A4 and RM-A6)	W	N/A	N/A	N/A	*
c.	Particulate Sampler (RM-A8) or (RM-A4 and RM-A6)	W	N/A	N/A	N/A	*
d.	System Effluent Flow Rate Measurement Devices (FR-149 and FR-150)	D	N/A	E	Q	*
e.	Sampler Flow Rate Monitor	D	N/A	E	N/A	*
6.	Fuel Handling Building ESF Air Treatment System					
a.	Noble Gas Activity Monitor (RM-A14)	D	M	R(3)	Q(2)	****
b.	System Effluent Flow Rate (UR-1104 A/B)	D	N/A	R	Q	****
c.	Sampler Flow Rate Measurement Device	D	N/A	R	Q	****

HISTORY INFO

Table 3.1-2

Radioactive Gaseous Process and Effluent Monitoring Instrumentation Surveillance Requirements

	INSTRUMENT	CHANNEL CHECK	SOURCE CHECK	CHANNEL CALIBRATION	CHANNEL TEST	APPLICABILITY
7.	Chemical Cleaning Building Ventilation System					
a.	Noble Gas Activity Monitor (ALC RM-I-18)	D	M	E(3)	Q(2)	###
b.	Iodine Sampler (ALC RM-I-18)	W	N/A	N/A	N/A	###
c.	Particulate Sampler (ALC RM-I-18)	W	N/A	N/A	N/A	###
8.	Waste Handling and Packaging Facility Ventilation System					
a.	Particulate Sampler (WHP-RIT-1)	D	W	SA	W	###
9.	Respirator and Laundry Maintenance Ventilation System					
a.	Particulate Sampler (RLM-RM-1)	D	W	SA	W	###

HISTORY INFO

Table 3.1-2

Table Notation

*	At all times.
**	During waste gas holdup system operation.
***	Operability is not required when discharges are positively controlled through the closure of WDG-V47, and where RM-A8 (or RM-A4 and RM-A6), FT-149, and FT-150 are operable.
****	During Fuel Handling Building ESF Air Treatment System Operation.
#	At all times during containment purging.
##	At all times when condenser vacuum is established.
###	During operation of the ventilation system.

(1) The CHANNEL TEST shall also demonstrate that automatic isolation of this pathway for the Auxiliary and Fuel Handling Building Ventilation System, the supply ventilation is isolated and control room alarm annunciation occurs if the following condition exists:

1. Instrument indicates measured levels above the high alarm/trip setpoint (Includes circuit failure).

2. Instrument indicates a down scale failure (Alarm function only) (Includes circuit failure).

3. Instrument controls moved from the operate mode (Alarm function only).

(2) The CHANNEL TEST shall also demonstrate that control room alarm annunciation occurs if any of the following conditions exist:

1 Instrument indicates measured levels above the alarm setpoint. (includes circuit failure)

2. Instrument indicates a down scale failure (includes circuit failure).

3. Instrument controls moved from the operate mode.

(3) The initial CHANNEL CALIBRATION for radioactivity measurement instrumentation shall be performed using one or more of the reference standards certified by the National Institute of Standards and Technology or using standards that have been obtained from suppliers that participate in measurement assurance activities with NIST. These standards should permit calibrating the system over its intended range of energy and measurement range. For subsequent CHANNEL CALIBRATION, sources that have been related to the initial calibration should be used. (Operating plants may substitute previously established calibration procedures for this requirement.)

(4) The CHANNEL CALIBRATION shall include the use of standard gas samples containing a nominal:

1. One volume percent hydrogen, balance nitrogen, and

2. Four volume percent hydrogen, balance nitrogen.

(5) The CHANNEL CALIBRATION shall include the use of standard gas samples containing a nominal:

1. One volume percent oxygen, balance nitrogen, and

2. Four volume percent oxygen, balance nitrogen.

HISTORY INFO

3.2 Radiological Effluents

3.2.1 Liquid Effluents

SURVEILLANCE REQUIREMENTS

3.2.1.1 Concentration

3.2.1.1.1 The radioactivity content of each batch of radioactive liquid waste shall be determined prior to release by sampling and analysis in accordance with Table 3.2-1. The results of pre-release analyses shall be used with the calculational methods in the ODCM to assure that the concentration at the point of release is maintained within the limits of Control 2.2.1.1.

3.2.1.1.2 Post-release analysis of samples composited from batch releases shall be performed in accordance with Table 3.2-1. The results of the previous post-release analysis shall be used with the calculational methods in the ODCM to assure that the concentrations at the point of release were maintained within the limits of Control 2.2.1.1.

3.2.1.1.3 The radioactivity concentration of liquids discharged from continuous release points shall be determined by collection and analysis of samples in accordance with Table 3.2-1. The results of the analysis shall be used with the calculational methods of the ODCM to assure that the concentration at the point of release is maintained within the limits of Control 2.2.1.1.

3.2.1.2 Dose Calculations

3.2.1.2.1 Cumulative dose contributions from liquid effluents shall be determined in accordance with the Offsite Dose Calculation Manual (ODCM) at least once a month.

3.2.1.3 Liquid Waste Treatment

3.2.1.3.1 Doses due to liquid releases shall be projected at least once a month, in accordance with the ODCM.

3.2.1.4 Liquid Holdup Tanks

3.2.1.4.1 The quantity of radioactive material contained in each of the tanks specified in Control 2.2.1.4 shall be determined to be within the limit by analyzing a representative sample of the tank's content weekly when radioactive materials are being added to the tank.

HISTORY INFO

Table 3.2-1

Radioactive Liquid Waste Sampling and Analysis Program

Liquid Release Type	Sampling Frequency	Minimum Analysis Frequency	Type of Activity Analysis	Lower Limit of Detection (LLD) (µCi/ml) (Note a)
A.1 Batch Waste Release Tanks (Note d)	P Each Batch	P Each Batch	H-3	1×10^{-5}
			Principal Gamma Emitters (Note f)	5×10^{-7}
			I-131	1×10^{-6}
			Dissolved and Entrained Gases (Gamma Emitters)	1×10^{-4}
	P Each Batch	Q Composite (Note b)	Gross alpha	1×10^{-7}
			Sr-89, Sr-90	5×10^{-8}
			Fe-55	1×10^{-6}
A.2 Continuous Releases (Note e)	Continuous (Note c)	W Composite (Note c)	Principal Gamma Emitters (Note f)	5×10^{-7}
			I-131	1×10^{-6}
			Dissolved and Entrained Gases (Gamma Emitters)	1×10^{-5}
	Continuous (Note c)	M Composite (Note c)	H-3	1×10^{-5}
			Gross alpha	1×10^{-7}
	Continuous (Note c)	Q Composite (Note c)	Sr-89, Sr-90	5×10^{-8}
			Fe-55	1×10^{-6}

HISTORY INFO

Table 3.2-1

Table Notation

a. The LLD is defined, for purposes of this surveillance, as the smallest concentration of radioactive material in a sample that will yield a net count above system background that will be detected with 95% probability with 5% probability of falsely concluding that a blank observation represents a "real" signal.

For a particular measurement system (which may include radiochemical separation):

$$LLD = \frac{4.66 S_b}{E \times V \times 2.22 \times 10^6 \times Y \times \exp(-\lambda \Delta t)}$$

Where:

LLD is the "a priori" lower limit of detection as defined above (as microcurie per unit mass or volume),

S_b is the standard deviation of the background counting rate or of the counting rate of a blank sample as appropriate (as counts per minute),

E is the counting efficiency (as counts per disintegration),

V is the sample size (in units of mass or volume),

2.22×10^6 is the number of disintegrations per minute per microcurie,

Y is the fractional radiochemical yield (when applicable),

λ is the radioactive decay constant for the particular radionuclide, and

Δt is the elapsed time between midpoint of sample collection and time of counting.

Typical values of E, V, Y and Δt shall be used in the calculation.

It should be recognized that the LLD is defined as an "a priori" (before the fact) limit representing the capability of a measurement system and not as an "a posteriori" (after the fact) limit for a particular measurement.

b. A composite sample is one in which the quantity of liquid sampled is proportional to the quantity of liquid waste discharged and in which the method of sampling employed results in a specimen which is representative of the liquids released.

c. To be representative of the quantities and concentrations of radioactive materials in liquid effluent, samples shall be collected continuously in proportion to the rate of flow of the effluent stream. Prior to analyses, all samples taken for the composite shall be thoroughly mixed in order for the composite sample to be representative of the effluent release.

HISTORY INFO

Table 3.2-1

d. A batch release is the discharge of liquid wastes of a discrete volume. Prior to sampling for analyses, each batch shall be isolated, and be thoroughly mixed, by a method described in the ODCM, to assure representative sampling.

e. A continuous release is the discharge of liquid wastes of a non- discrete volume; e.g., from a volume or system that has an input flow during the continuous release.

f. The principal gamma emitters for which the LLD specification applies exclusively are the following radionuclides: Mn-54, Fe-59, Co-58, Co-60, Zn-65, Mo-99, Cs-134, Cs-137, Ce-141, and Ce-144. This list does not mean that only these nuclides are to be considered. Other gamma peaks that are identifiable, together with those of the above nuclides, shall also be analyzed and reported in the Annual Radioactive Effluent Release Report pursuant to TS 6.9.4.

HISTORY INFO

3.2.2 Gaseous Effluents

SURVEILLANCE REQUIREMENTS

3.2.2.1 Dose Rates

3.2.2.1.1 The dose rate due to noble gases in gaseous effluents shall be determined to be within the limits of Control 2.2.2.1.a in accordance with the methods and procedures of the ODCM.

3.2.2.1.2 The dose rate of radioactive materials, other than noble gases, in gaseous effluents shall be determined to be within the limits of Control 2.2.2.1.b in accordance with methods and procedures of the ODCM by obtaining representative samples and performing analyses in accordance with the sampling and analysis program, specified in Table 3.2-2.

3.2.2.2 Dose, Noble Gas

3.2.2.2.1 Cumulative dose contributions from noble gas effluents for the current calendar quarter and current calendar year shall be determined in accordance with the OFFSITE DOSE CALCULATION MANUAL (ODCM) monthly.

3.2.2.3 Dose, Iodine-131, Iodine-133, Tritium, and Radionuclides In Particulate Form

3.2.2.3.1 Cumulative dose contributions from Iodine-131, Iodine-133, Tritium, and radionuclides in particulate form with half lives greater than 8 days for the current calendar quarter and current calendar year shall be determined in accordance with the OFFSITE DOSE CALCULATION MANUAL (ODCM) monthly.

3.2.2.4 Gaseous Waste Treatment

3.2.2.4.1 Doses due to gaseous releases from the unit shall be projected monthly in accordance with the ODCM.

3.2.2.5 Explosive Gas Mixture

3.2.2.5.1 The concentrations of hydrogen and oxygen in the waste gas holdup system shall be determined to be within the limits of Control 2.2.2.5 by monitoring the waste gases in the Waste Gas Holdup System with the hydrogen and oxygen monitors covered in Table 2.1-2 of Control 2.1.2.

HISTORY INFO

3.2.2.6 Waste Gas Decay Tank

3.2.2.6.1 The concentration of radioactivity contained in the vent header shall be determined weekly. If the concentration of the vent header exceeds 10.7 Ci/cc, daily samples shall be taken of each waste gas decay tank being added to, to determine if the tank(s) is less than or equal to 8800 Ci/tank.

HISTORY INFO

Table 3.2-2

Radioactive Gaseous Waste Sampling and Analysis Program

Gaseous Release Type	Sampling Frequency	Minimum Analysis Frequency	Type of Activity Analysis	Lower Limit of Detection (LLD) µCi/ml) (Note a)
A. Waste Gas Decay Tank	P Each Tank Grab Sample	P Each Tank	Principal Gamma Emitters (Note g)	1×10^{-4}
B. Containment Purge	P (Note b) Each Purge Grab Sample	P (Note b) Each Purge	H-3 Principal Gamma Emitters (Note g)	1×10^{-6} 1×10^{-4}
C. Auxiliary and Fuel Handling Building Air Treatment System	M (Notes c, e) Grab Sample	M	H-3 Principal Gamma Emitters (Note g)	1×10^{-6} 1×10^{-4}
D. Fuel Handling Building ESF Air Treatment System	M (during System Operation) Grab Sample	M (during System Operation)	H-3 Principal Gamma Emitters (Note g)	1×10^{-6} 1×10^{-4}
E. Condenser Vacuum Pumps Exhaust (Note h)	M (Note h) Grab Sample	M (Note h)	H-3 Principal Gamma Emitters (Note g)	1×10^{-6} 1×10^{-4}
F. Chemical Cleaning Building Air Treatment System	M (Note l) Grab Sample	M	H-3 Principal Gamma Emitters (Note g)	1×10^{-6} 1×10^{-4}
G. Waste Handling and Packaging Facility Air Treatment System	See Section I of this table	See Section I of this table	See Section I of this table	See Section I of this table
H. Respirator and Laundry Maintenance Facility Air Treatment System	See Section I of this table	See Section I of this table	See Section I of this table	See Section I of this table

HISTORY INFO

Table 3.2-2

Radioactive Gaseous Waste Sampling and Analysis Program

Gaseous Release Type	Sampling Frequency	Minimum Analysis Frequency	Type of Activity Analysis	Lower Limit of Detection (LLD) (μCi/ml) (Note a)
I. All Release Types as Listed Above in B, C, D, F, G, and H (During System Operation	Continuous (Note f)	W (Note d) Charcoal Sample	I-131	1×10^{-12}
	Continuous (Note f)	W (Note d) Particulate	Principal Gamma Emitters (Note g) (I-131, Others)	1×10^{-11}
	Continuous (Note f)	Q Composite Particulate Sample	Gross Alpha	1×10^{-11}
	Continuous (Note f)	Q Composite Particulate Sample	Sr-89, Sr-90	1×10^{-11}
J. Condenser Vent Stack Continuous Iodine Sampler (Note j)	Continuous (Note k)	W (Note d) Charcoal Sample	I-131	1×10^{-12}

HISTORY INFO

Table 3.2-2

Table Notation

a. The LLD is defined, for purposes of this surveillance, as the smallest concentration of radioactive material in a sample that will yield a net count above system background that will be detected with 95% probability with 5% probability of falsely concluding that a blank observation represents a "real" signal.

For a particular measurement system (which may include radiochemical separation):

$$LLD = \frac{4.66\,S_b}{E \times V \times 2.22 \times 10^6 \times Y \times \exp(-\lambda \Delta t)}$$

Where:

LLD is the "a priori" lower limit of detection as defined above (as microcurie per unit mass or volume),

S_b is the standard deviation of the background counting rate or of the counting rate of a blank sample as appropriate (as counts per minute),

E is the counting efficiency (as counts per disintegration),

V is the sample size (in units of mass or volume),

2.22×10^6 is the number of disintegrations per minute per microcurie,

Y is the fractional radiochemical yield (when applicable),

λ is the radioactive decay constant for the particular radionuclide, and

Δt is the elapsed time between midpoint of sample collection and time of counting.

Typical values of E, V, Y and Δt shall be used in the calculation.

It should be recognized that the LLD is defined as an "a priori" (before the fact) limit representing the capability of a measurement system and not as an "a posteriori" (after the fact) limit for a particular measurement.

b. Sampling and analysis shall also be performed following shutdown, startup, or a THERMAL POWER change exceeding 15 percent of RATED THERMAL POWER within one hour unless (1) analysis shows that the DOSE EQUIVALENT I-131 concentration in the primary coolant has not increased more than a factor of 3; and (2) the noble gas activity monitor shows that effluent activity has not increased by more than a factor of 3.

c. Tritium grab samples from the spent fuel pool area shall be taken at least once per 24 hours when the refueling canal is flooded.

HISTORY INFO

Table 3.2-2

d. Charcoal cartridges and particulate filters shall be changed at least once per 7 days and analyses shall be completed within 48 hours after changing (or after removal from sampler).

e. Tritium grab samples shall be taken weekly from the spent fuel pool area whenever spent fuel is in the spent fuel pool.

f. The ratio of the sample flow rate to the sampled stream flow rate shall be known for the time period covered by each dose or dose rate calculation made in accordance with Controls 2.2.2.1, 2.2.2.2, and 2.2.2.3.

g. The principal gamma emitters for which the LLD specification applies exclusively are the following radionuclides: Kr-87, Kr-88, Xe-133, Xe-133m, Xe-135 and Xe-138 for gaseous emissions and Mn-54, Fe-59, Co-58, Co-60, Zn-65, Mo-99, Cs-137, Ce-141 and Ce-144 for particulate emissions. This list does not mean that only these nuclides are to be considered. Other gamma peaks that are identifiable, together with those of the above nuclides, shall also be analyzed and reported in the Annual Radioactive Effluent Release Report pursuant to TS 6.9.4.

h. Applicable only when condenser vacuum is established. Sampling and analysis shall also be performed following shutdown, startup, or a THERMAL POWER change exceeding 15 percent of RATED THERMAL POWER within one hour unless (1) analysis shows that the DOSE EQUIVALENT I-131 concentration in the primary coolant has not increased more than a factor of 3; and (2) the noble gas activity monitor shows that effluent activity has not increased by more than a factor of 3.

i. Gross Alpha, Sr-89, and Sr-90 analyses do not apply to the Fuel Handling Building ESF Air Treatment System.

j. If the Condenser Vent Stack Continuous Iodine Sampler is unavailable, then alternate sampling equipment will be placed in service within 48 hours or a report will be prepared and submitted within 30 days from the time the sampler is found or made inoperable which identifies (a) the cause of the inoperability, (b) the action taken to restore representative sampling capability, (c) the action taken to prevent recurrence, and (d) quantification of the release via the pathway during the period and comparison to the limits prescribed by Control 2.2.2.1.b.

k. Applicable only when condenser vacuum is established.

l. Applicable when liquid radwaste is moved or processed within the facility.

m. Iodine samples only required in the Chemical Cleaning Building when TMI-1 liquid radwaste is stored or processed in the facility.

HISTORY INFO

3.2.3 Total Radioactive Effluents

3.2.3.1 Dose Calculation

3.2.3.1.1 Cumulative annual dose contributions from liquid and gaseous effluents shall be determined in accordance with Surveillances 3.2.1.2.1, 3.2.2.2.1, and 3.2.2.3.1, including direct radiation contributions from the Unit and from outside storage tanks, and in accordance with the methodology contained in the ODCM.

HISTORY INFO

4.0 PART I REFERENCES

4.1 Title 10, Code of Federal Regulations, "Energy"

4.2 Regulatory Guide 1.109, "Calculation of Annual Doses to Man from Routing Releases of Reactor Effluents for the Purpose of Evaluating Compliance with 10 CFR Part 50, Appendix I, "Revision 1, October 1977

4.3 TMI-1 Technical Specifications, attached to Facility Operating License No. DPR-50

4.4 TMI-1 FSAR

HISTORY INFO

HISTORY INFO

PART II

TMI-2 RADIOLOGICAL EFFLUENT CONTROLS

PART II

Definitions

1.0 DEFINITIONS

DEFINED TERMS

1.1 The DEFINED TERMS of this section appear in capitalized type and are applicable throughout Part II of the ODCM.

PDMS

1.2 Post-Defueling Monitored Storage (PDMS) is that condition where TMI-2 defueling has been completed, the core debris removed from the reactor during the clean-up period has been shipped off-site and the facility has been placed in a stable, safe and secure condition.

ACTION

1.3 ACTION shall be those additional requirements specified as corollary statements to each control and shall be part of the controls.

OPERABLE - OPERABILITY

1.4 A system, subsystem, train, component or device shall be OPERABLE or have OPERABILITY when it is capable of performing its specified function(s). Implicit in this definition shall be the assumption that all necessary attendant instrumentation, controls, normal and emergency electrical power sources, cooling or seal water, lubrication or other auxiliary equipment, that are required for the system, subsystem, train, component or device to perform its function(s), are also capable of performing their related support function(s).

CHANNEL CALIBRATION

1.5 A CHANNEL CALIBRATION shall be the adjustment, as necessary, of the channel output such that it responds with necessary range and accuracy to known values of the parameter which the channel monitors. The CHANNEL CALIBRATION shall encompass the entire channel including the sensor and alarm and/or trip functions, and shall include the CHANNEL FUNCTIONAL TEST. CHANNEL CALIBRATION may be performed by any series of sequential, overlapping or total channel steps such that the entire channel is calibrated.

CHANNEL CHECK

1.6 A CHANNEL CHECK shall be the qualitative assessment of channel behavior during operation by observation. This determination shall include, where possible, comparison of the channel indication and/or status with other indications and/or status derived from independent instrument channels measuring the same parameter.

HISTORY INFO

CHANNEL FUNCTIONAL TEST

1.7 A CHANNEL FUNCTIONAL TEST shall be:

a. Analog channels - the injection of a simulated signal into the channel as close to the primary sensor as practicable to verify OPERABILITY including alarm and/or trip functions.

b. Bistable channels - the injection of a simulated signal into the channel sensor to verify OPERABILITY including alarm and/or trip functions.

SOURCE CHECK

1.8 A SOURCE CHECK shall be the qualitative assessment of channel response when the channel sensor is exposed to a radioactive source.

COMPOSITE SAMPLE

1.9 A COMPOSITE SAMPLE is a combination of individual samples obtained at regular intervals over a time period. Either the volume of each individual sample is proportional to the flow rate discharge at the time of sampling or the number of equal volume samples is proportional to the time period used to produce the composite.

GRAB SAMPLE

1.10 A GRAB SAMPLE is an individual sample collected in less than fifteen minutes.

BATCH RELEASE

1.11 A BATCH RELEASE is the discharge of fluid waste of a discrete volume.

CONTINUOUS RELEASE

1.12 A CONTINUOUS RELEASE is the discharge of fluid waste of a non-discrete volume, e.g., from a volume or system that has an input flow during the CONTINUOUS RELEASE.

SITE BOUNDARY

1.13 The SITE BOUNDARY used as the basis for the limits on the release of gaseous effluents is as defined in Section 2.1.2.2 and shown on Figure 2.1-3 of the TMI-1 FSAR. This boundary line includes portions of the Susquehanna River surface between the east bank of the river and Three Mile Island and between Three Mile Island and Shelley Island.

The SITE BOUNDARY used as the basis for the limits on the release of liquid effluents is as shown in Figure 1.1 in Part I of this ODCM.

FREQUENCY NOTATION

1.14 The FREQUENCY NOTATION specified for the performance of Surveillance Requirements shall correspond to the intervals defined in Table 1.1. All Surveillance Requirements shall be performed within the specified time interval with a maximum allowable extension not to exceed 25% of the surveillance interval.

HISTORY INFO

TABLE 1.1

Frequency Notation

NOTATION	FREQUENCY
S (Shiftly)	At least once per 12 hours.
D (Daily)	At least once per 24 hours.
W (Weekly)	At least once per 7 days.
M (Monthly)	At least once per 31 days.
Q (Quarterly)	At least once per 92 days.
SA (Semi-Annually)	At least once per 184 days.
A (Annually)	At least once per 12 months.
E	At least once per 18 months.
N.A.	Not applicable.
P	Completed prior to each release

HISTORY INFO

2.0 CONTROLS AND BASES

2.0.1 Controls and ACTION requirements shall be applicable during the conditions specified for each control.

2.0.2 Adherence to the requirements of the Control and/or associated ACTION within the specified time interval shall constitute compliance with the control. In the event the Control is restored prior to expiration to the specified time interval, completion of the ACTION statement is not required.

2.0.3 In the event the Control and associated ACTION requirements cannot be satisfied because of circumstances in excess of those addressed in the Control, initiate appropriate actions to rectify the problem to the extent possible under the circumstances, and submit a special report to the Commission pursuant to TMI-2 PDMS Technical Specification (Tech. Spec.) Section 6.8.2 within 30 days unless otherwise specified.

2.1 Radioactive Effluent Instrumentation

2.1.1 Radioactive Liquid Effluent Instrumentation

Radioactive Liquid Effluent Instrumentation is common between TMI-1 and TMI-2. Controls, applicability, and actions are specified in ODCM Part I, Control 2.1.1

2.1.2 Radioactive Gaseous Process and Effluent Monitoring Instrumentation

CONTROL:

The radioactive gaseous process and effluent monitoring instrumentation channels shown in Table 2.1-2 shall be OPERABLE with their alarm/trip setpoints set to ensure that the limits of Control 2.2.2.1 are not exceeded. The alarm/trip setpoints of these channels shall be determined in accordance with the OFFSITE DOSE CALCULATION MANUAL (ODCM).

APPLICABILITY: As shown in Table 2.1-2.

ACTION:

a. With a radioactive gaseous process or effluent monitoring instrumentation channel alarm/trip setpoint less conservative than required by the above control, immediately suspend the release of radioactive effluent monitored by the affected channel or declare the channel inoperable.

b. With less than the minimum number of radioactive gaseous process or effluent monitoring instrumentation channels OPERABLE, take the ACTION shown in Table 2.1-2. Exert best efforts to return the instrumentation to OPERABLE status within 30 days and, if unsuccessful, explain in the next Annual Effluent Release Report why the inoperability was not corrected in a timely manner.

HISTORY INFO

BASES

The radioactive gaseous effluent instrumentation is provided to monitor and control, as applicable, the releases of radioactive materials in gaseous effluent during actual or potential releases. The alarm/trip setpoints for these instruments shall be calculated in accordance with NRC approved methods in the ODCM to provide reasonable assurance that the annual releases are within the limits specified in 10 CFR 20.1301.

HISTORY INFO

Table 2.1-2

Radioactive Gaseous Process and Effluent Monitoring Instrumentation

	INSTRUMENT	MINIMUM CHANNELS OPERABLE	APPLICABILITY	ACTION
1.	Containment Purge Monitoring System			
	a. Noble Gas Activity Monitor (2HP-R-225)	1	NOTE 1	NOTE 2
	b. Particulate Monitor (2HP-R-225)	1	NOTE 1	NOTE 2
	c. Effluent System Flow Rate Measuring Device (2AH-FR-5907 Pen 1)	1	NOTE 1	NOTE 3
2.	Station Ventilation System			
	a. Noble Gas Activity Monitor (2HP-R-219) or (2HP-R-219A)	1	NOTE 1	NOTE 2
	b. Particulate Monitor (2HP-R-219) or (2HP-R-219A)	1	NOTE 1	NOTE 2
	c. Effluent System Flow Rate Monitoring Device (2AH-FR-5907 Pen 6)	1	NOTE 1	NOTE 3

NOTES:

1. During operation of the monitored system.
2. With the number of channels OPERABLE less than required by the Minimum Channels OPERABLE requirement, secure Reactor Building Purge if in progress.
3. With flow rate monitoring instrumentation out of service, flow rates from the Auxiliary, Fuel Handling, and Reactor Buildings may be summed individually or estimated using the maximum design flow for the exhaust fans in operation.

HISTORY INFO

2.2 Radioactive Effluent Controls

2.2.1 Liquid Effluent Controls

2.2.1.1 Liquid Effluent Concentration

CONTROL:

The concentration of radioactive material released at anytime from the unit to unrestricted areas shall be limited to ten times the concentrations specified in 10 CFR Part 20.1001-20.2401, Appendix B, Table 2, Column 2.

APPLICABILITY: At all times

ACTION:

With the concentration of radioactive material released from the unit to unrestricted areas exceeding the above limits, immediately restore concentrations within the above limits.

BASES

This control is provided to ensure that the concentration of radioactive materials released in liquid waste effluent from the unit to unrestricted areas will be less than ten times the concentration levels specified in 10 CFR Part 20.1001-20.2401, Appendix B, Table 2. These Controls permit flexibility under unusual conditions, which may temporarily result in higher than normal releases, but still within ten times the concentrations, specified in 10 CFR 20. It is expected that by using this flexibility under unusual conditions, and exerting every effort to keep levels of radioactive material in liquid wastes as low as practicable, the annual releases will not exceed a small fraction of the annual average concentrations specified in 10 CFR 20. As a result, this Control provides reasonable assurance that the resulting annual exposure to an individual in off-site areas will not exceed the design objectives of Section II A of Appendix I to 10 CFR Part 50, which were established as requirements for the cleanup of TMI-2 in the NRC's Statement of Policy of April 27, 1981.

2.2.1.2 Liquid Effluent Dose

CONTROL

The dose or dose commitment to a MEMBER OF THE PUBLIC from radioactive materials in liquid effluents released from the unit to the SITE BOUNDARY shall be limited:

a. During any calendar quarter to less than or equal to 1.5 mrem to the total body and to less than or equal to 5 mrem to any organ.

b. During any calendar year to less than or equal to 3 mrem to the total body and to less than or equal to 10 mrem to any organ.

HISTORY INFO

APPLICABILITY: At all times

ACTION:

a. With the calculated dose from the release of radioactive materials in liquid effluents exceeding any of the above limits, prepare and submit to the NRC Region I Administrator within 30 days, a Special Report which identifies the cause(s) for exceeding the limit(s) and defines the corrective actions to be taken to reduce the releases of radioactive materials in liquid effluents during the remainder of the current calendar quarter and during the subsequent 3 calendar quarters so that the cumulative dose or dose commitment to any individual from such releases during these four calendar quarters is within 3 mrem to the total body and 10 mrem to any organ. This Special Report shall also include (1) the result of radiological analyses of the drinking water source, and (2) the radiological impact on finished drinking water supplies with regard to the requirements of 40 CFR 141, Safe Drinking Water Act.

BASES

This Control requires that the dose to offsite personnel be limited to the design objectives of Appendix I of 10 CFR Part 50. This will assure the dose received by the public during PDMS is equivalent to or less than that from a normal operating reactor. The limits also assure that the environmental impacts are consistent with those assessed in NUREG-0683, the TMI-2 Programmatic Environmental Impact Statement (PEIS). The ACTION statements provide the required flexibility under unusual conditions and at the same time implement the guides set forth in Section IV.A of Appendix I to assure that the releases of radioactive material in liquid effluents will be kept "as low as is reasonably achievable". The dose calculations in the ODCM implement the requirements in Section III.A. of Appendix I that conformance with the guides of Appendix I is to be shown by calculational procedures based on models and data such that the actual exposure of a MEMBER OF THE PUBLIC through appropriate pathways is unlikely to be substantially underestimated. The equations specified in the ODCM for calculating the doses due to the actual release rates of radioactive materials in liquid effluents are consistent with the methodology provided in Regulatory Guide 1.109, "Calculation of Annual Doses to Man from Routine Releases of Reactor Effluents for the Purpose of Evaluating Compliance with 10 CFR Part 50, Appendix I," Revision 1, October, 1977, and Regulatory Guide 1.113, "Estimating Aquatic Dispersion of Effluents from Accidental and Routine Reactor Releases for the Purpose of Implementing Appendix I," April, 1977. NUREG-0133 provides methods for dose calculations consistent with Regulatory Guides 1.109 and 1.113.

HISTORY INFO

2.2.1.3 Liquid Radwaste Treatment System

CONTROL:

The appropriate portions of the liquid radwaste treatment system shall be used to reduce the radioactive materials in liquid wastes prior to their discharge when the projected doses due to the liquid effluent from the unit to unrestricted areas would exceed 0.06 mrem to the total body or 0.2 mrem to any organ in any calendar month.

APPLICABILITY: At all times

ACTION:

a. With radioactive liquid waste being discharged without treatment and in excess of the above limits, prepare and submit to the NRC Region I Administrator within 30 days, a Special Report which includes the following information:

1. Explanation of why liquid radwaste was being discharged without treatment, identification of any inoperable equipment or subsystems, and the reason for inoperability,

2. Action(s) taken to restore the inoperable equipment to OPERABLE status, and,

3. A summary description of action(s) taken to prevent a recurrence.

BASES

The requirement that the appropriate portions of this system (shared with TMI-1) be used, when specified, provides assurance that the releases of radioactive materials in liquid effluents will be kept as low as is reasonably achievable. This control implements the requirements of 10 CFR Part 50.36a, General Design Criterion 60 of Appendix A to 10 CFR Part 50 and the design objective given in Section II.D of Appendix I to 10 CFR Part 50. The intent of Section II.D. is to reduce effluents to as low as is reasonably achievable in a cost effective manner. This control satisfies this intent by establishing a dose limit which is a small fraction (25%) of Section II.A of Appendix I, 10 CFR Part 50 dose requirements. This margin, a factor of 4, constitutes a reasonable reduction.

HISTORY ITEM

2.2.2 Gaseous Effluent Controls

2.2.2.1 Gaseous Effluent Dose Rate

CONTROL:

The dose rate due to radioactive materials released in gaseous effluent from the site shall be limited to the following:

a. For noble gases: less than or equal to 500 mrem/yr to the total body and less than or equal to 3000 mrem/yr to the skin, and

b. For tritium and all radionuclides in particulate form with half lives greater than 8 days: less than or equal to 1500 mrem/yr to any organ.

APPLICABILITY: At all times.

ACTION:

With the release rate(s) exceeding the above limits, immediately decrease the release rate to comply with the above limit(s).

BASES

The control provides reasonable assurance that the annual dose at the SITE BOUNDARY from gaseous effluent from all units on the site will be within the annual dose limits of 10 CFR Part 20 for unrestricted areas. At the same time, these Controls permit flexibility under unusual conditions, which may temporarily result in higher than the design objective levels, but still within the dose limits specified in 10 CFR 20 and within the design objectives of Appendix I to 10 CFR 50. It is expected that using this flexibility under unusual conditions, and by exerting every effort to keep levels of radioactive material in gaseous wastes as low as practicable, the annual releases will not exceed a small fraction of the annual dose limits specified in 10 CFR 20 and will not result in doses which exceed the design objectives of Appendix I to 10 CFR 50, which were endorsed as limits for the cleanup of TMI-2 by the NRC's Statement of Policy of April 27, 1981. These gaseous release rates provide reasonable assurance that radioactive material discharged in gaseous effluent will not result in the exposure of a MEMBER OF THE PUBLIC in an unrestricted area, either within or outside the SITE BOUNDARY, to annual average concentrations exceeding the values specified in Appendix B, Table 2 of 10 CFR Part 20. For MEMBERS OF THE PUBLIC who may at times be within the SITE BOUNDARY, the occupancy of the MEMBER OF THE PUBLIC will be sufficiently low to compensate for any increase in the atmospheric diffusion factor above that for the exclusion area boundary.

HISTORY INFO

The specified release rate limits restrict, at all times, the corresponding gamma and beta dose rates above background to a MEMBER OF THE PUBLIC at or beyond the SITE BOUNDARY to less than or equal to 500 mrem/year to the total body or to less than or equal to 3000 mrem/year to the skin. The absence of iodine ensures that the corresponding thyroid dose rate above background to an infant via the inhalation pathway is less than or equal to 1500 mrem/yr (NUREG 0133), thus there is no need to specify dose rate limits for these nuclides.

2.2.2.2 Gaseous Effluents Dose-Noble Gases

CONTROL:

The air dose due to noble gases released in gaseous effluents from the unit to areas at and beyond the SITE BOUNDARY shall be limited to the following:

a. During any calendar quarter: less than or equal to 5 mrad for gamma radiation and less than or equal to 10 mrad for beta radiation and,

b. During any calendar year: less than or equal to 10 mrad for gamma radiation and less than or equal to 20 mrad for beta radiation.

APPLICABILITY: At all times.

ACTION:

a. With the calculated air dose from radioactive noble gases in gaseous effluents exceeding any of the above limits, prepare and submit to the NRC Region I Administrator within 30 days, a Special Report which identifies the cause(s) for exceeding the limit(s) and defines the corrective actions that have been taken to reduce the releases and the proposed corrective actions to be taken to assure that subsequent releases will be in compliance with the above limits.

HISTORY INFO

BASES

This control applies to the release of radioactive materials in gaseous effluents from TMI-2.

This control and associated action is provided to implement the requirements of Section II.B, III.A and IV.A of Appendix I, 10 CFR Part 50. The Control implements the guides set forth in Section II.B of Appendix I. The ACTION statements provide flexibility under unusual conditions and at the same time implement the guides set forth in Section IV.A of Appendix I to assure that the releases of radioactive material in gaseous effluents will be kept "as low as is reasonably achievable." The Surveillance Requirements implement the requirements in Section III.A of Appendix I that conformance with the guides of Appendix I be shown by calculational procedures based on models and data such that the actual exposure of a MEMBER OF THE PUBLIC through

the appropriate pathways is unlikely to be substantially underestimated. The dose calculation methodology and parameters established in the ODCM for calculating the doses due to the actual release rates of radioactive noble gases in gaseous effluents are consistent with the methodology provided in Regulatory Guide 1.109, "Calculation of Annual Doses to Man from Routine Release of Reactor Effluents for the Purpose of Evaluating Compliance with 10 CFR Part 50, Appendix I," Revision 1, October 1977 and Regulatory Guide 1.111, "Methods for Estimating Atmospheric Transport and Dispersion of Gaseous Effluents in Routine Releases from Light-Water Cooled Reactors," Revision 1, July 1977. The ODCM equations provided for determining the air doses at and beyond the SITE BOUNDARY are based upon the historical average atmospheric conditions. NUREG-0133 provides methods for dose calculations consistent with Regulatory Guides 1.109 and 1.111.

2.2.2.3 Dose - Iodine-131, Iodine-133, Tritium, and Radionuclides In Particulate Form

CONTROL:

The dose to a MEMBER OF THE PUBLIC from Tritium and all radionuclides in particulate form with half lives greater than 8 days, in gaseous effluents released from the unit to areas at and beyond the SITE BOUNDARY shall be limited to the following:

a. During any calendar quarter: less than or equal to 7.5 mrem to any organ, and

b. During any calendar year: less than or equal to 15 mrem to any organ.

APPLICABILITY: At all times.

ACTION:

With the calculated dose from the release of Tritium and radionuclides in particulate form with half lives greater than 8 days, in gaseous effluents exceeding any of the above limits, prepare and submit to the NRC Region I Administrator within 30 days, a Special Report which identifies the cause(s) for exceeding the limit and defines the corrective actions that have been taken to reduce the releases and the proposed corrective actions to be taken to assure that subsequent releases will be in compliance with the above limits.

HISTORY INFO

BASES

This control applies to the release of radioactive materials in gaseous effluents from TMI-2.

This control and associated action is provided to implement the requirements of Section II.C, III.A and IV.A of Appendix I, 10 CFR Part 50. The Controls are the guides set forth in Section II.C of Appendix I. The ACTION statement provides flexability during unusual conditions and at the same time implements the guides set forth in Section IV.A of Appendix I to assure that the releases of radioactive materials in gaseous effluents will be kept "as low as is reasonably achievable." The ODCM calculational methods specified in the surveillance requirements implement the requirements in Section III.A of Appendix I that conformance with the guides of Appendix I be shown by calculational procedures based on models and data such that the actual exposure of a MEMBER OF THE PUBLIC through appropriate pathways is unlikely to be substantially underestimated. The ODCM calculational methodology and parameters for calculating the doses due to the actual release rates of the subject materials are consistent with the methodology provided in Regulatory Guide 1.109, "Calculation of Annual Doses to Man from Routine Releases of Reactor Effluents for the Purpose of Evaluating Compliance with 10 CFR Part 50, Appendix I," Revision 1, October, 1977 and Regulatory Guide 1.111, "Methods for Estimating Atmospheric Transport and Dispersion of Gaseous Effluents in Routine Releases from Light-Water-Cooled Reactors," Revision 1, July, 1977. These equations also provide for determining the actual doses based upon the historical average atmospheric conditions. The release rate controls for iodine-131, iodine-133, tritium and radionuclides in particulate form with half lives greater than 8 days are dependent upon the existing radionuclide pathways to man, in areas at and beyond the SITE BOUNDARY. The pathways that were examined in the development of these calculations were: 1) individual inhalation of airborne radionuclides, 2) deposition of radionuclides onto green leafy vegetation with subsequent consumption by man, 3) deposition onto grassy areas where milk animals and meat producing animals graze with consumption of the milk and meat by man, and 4) deposition on the ground with subsequent exposure of man. The absence of iodines at the site eliminates the need to specify dose limits for these nuclides.

HISTORICAL DOCUMENT

2.2.2.4 Ventilation Exhaust Treatment System

CONTROL

The VENTILATION EXHAUST TREATMENT SYSTEM shall be OPERABLE. The appropriate portions of the VENTILATION EXHAUST TREATMENT SYSTEM shall be used to reduce radioactive materials in gaseous waste prior to their discharge when the monthly projected doses due to gaseous effluent releases from the site would exceed 0.3 mrem to any organ.

APPLICABILITY: At all times.

ACTION:

a. With the VENTILATION EXHAUST TREATMENT SYSTEM inoperable for more than a month or with gaseous waste being discharged without treatment and in excess of the above limits, prepare and submit to the NRC Region I Administrator within 30 days, a Special Report which includes the following information:

1. Identification of the inoperable equipment or subsystems and the reason for inoperability,

2. Action(s) taken to restore the inoperable equipment to OPERABLE status, and

3. A summary description of action(s) taken to prevent a recurrence.

BASES

The use of the VENTILATION EXHAUST TREATMENT SYSTEM ensures that gaseous effluents are treated as appropriate prior to release to the environment. The appropriate portions of this system provide reasonable assurance that the releases of radioactive materials in gaseous effluents will be kept "as low as is reasonably achievable." This control implements the requirements of 10 CFR Part 50.36a, General Design Criterion 60 of Appendix A to 10 CFR Part 50, and the design objectives given in Section II.D of Appendix I to 10 CFR Part 50. The specified limits governing the use of appropriate portions of the systems were specified as a suitable fraction of the guide set forth in Sections II.B and II.C of Appendix I, 10 CFR Part 50, for gaseous effluents.

HISTORY ONLY

2.2.3 Total Radioactive Effluent Controls

2.2.3.1 Total Dose

CONTROL:

The annual (calendar year) dose or dose commitment to any MEMBER OF THE PUBLIC, due to releases of radioactivity and to radiation from uranium fuel cycle sources shall be limited to less than or equal to 25 mrem to the total body or any organ except the thyroid, which shall be limited to less than or equal to 75 mrem.

APPLICABILITY: At all times.

ACTION:

With the calculated dose from the release of radioactive materials in liquid or gaseous effluents exceeding twice the limits of Controls 2.2.1.2.a, 2.2.1.2.b, 2.2.2.2.a, 2.2.2.2.b, 2.2.2.3.a, or, 2.2.2.3.b, calculations should be made including direct radiation contributions from the unit and from outside storage tanks to determine whether the above limits of Control 2.2.3.1 have been exceeded. If such is the case, prepare and submit to the NRC Region I Administrator within 30 days, a Special Report which defines the corrective action to be taken to reduce subsequent releases to prevent recurrence of exceeding the above limits and includes the schedule for achieving conformance with the above limits. This Special Report, as defined in 10 CFR Part 20.2203(b), shall include an analysis which estimates the radiation exposure (dose) to a MEMBER OF THE PUBLIC from uranium fuel cycle sources, including all effluent pathways and direct radiation, for the calendar year that includes the release(s) covered by this report. It shall also describe levels of radiation and concentrations of radioactive material involved, and the cause of the exposure levels or concentrations. If the estimated dose(s) exceed the above limits, and if the release condition resulting in violation of 40 CFR 190 has not already been corrected, the Special Report shall include a request for a variance in accordance with the provisions of 40 CFR 190. Submittal of the report is considered a timely request, and a variance is granted until staff action on the request is complete.

HISTORY INFO

BASES

This control is provided to meet the dose limitations of 40 CFR Part 190 that have been incorporated into 10 CFR Part 20.1301(d). This control requires the preparation and submittal of a Special Report whenever the calculated doses from plant generated radioactive effluents and direct radiation exceed 25 mrem to the total body or any organ, except the thyroid, which shall be limited to less than or equal to 75 mrem. For sites containing up to 4 reactors, it is highly unlikely that the resultant dose to a MEMBER OF THE PUBLIC will exceed the dose limits of 40 CFR Part 190 if the individual reactors remain within twice the dose design objectives of Appendix I, and if direct radiation doses from the reactor units and outside storage tanks are kept small. The Special Report will describe a course of action that should result in the limitation of the annual dose to a MEMBER OF THE PUBLIC to within the 40 CFR Part 190 limits. For the purposes of the Special Report, it may be assumed that the dose commitment to the member of the public from other uranium fuel cycle sources is negligible, with the exception that dose contributions from other nuclear fuel cycle facilities at the same site or within a radius of 8 km must be considered. If the dose to any member of the public is estimated to exceed the requirements of 40 CFR Part 190, the Special Report with a request for a variance (provided the release conditions resulting in violation of 40 CFR Part 190 have not already been corrected), in accordance with the provisions of 40 CFR Part 190.11 and 10 CFR Part 20.2203(b), is considered to be a timely request and fulfills the requirements of 40 CFR Part 190 until NRC staff action is completed. The variance only relates to the limits of 40 CFR Part 190, and does not apply in any way to the other requirements for dose limitation of 10 CFR Part 20, as addressed in Controls 2.2.1.1 and 2.2.2.1. An individual is not considered a MEMBER OF THE PUBLIC during any period in which he/she is engaged in carrying out any operation that is part of the nuclear fuel cycle.

HISTORY ONLY

3.0 SURVEILLANCES

3.0.1 Surveillance Requirements shall be applicable during the conditions specified for individual Controls unless otherwise stated in an individual Surveillance Requirement. The Surveillance Requirements shall be performed to demonstrate compliance with the OPERABILITY requirements of the Control.

3.0.2 Each Surveillance Requirement shall be performed within the specified time interval with a maximum allowable extension not to exceed 25% of the surveillance interval.

3.0.3 Failure to perform a Surveillance Requirement within the time interval specified in Section 3.0.2 shall constitute non-compliance with OPERABILITY requirements for a Control. The time limits of the ACTION requirements are applicable at the time it is identified that a Surveillance Requirement has not been performed. The ACTION requirements may be delayed for up to 24 hours to permit completion of the surveillance when the allowable outage time limits of the ACTION requirements are less than 24 hours. Surveillance Requirements do not have to be performed on inoperable equipment.

3.1 Radioactive Effluent Instrumentation

3.1.1 Radioactive Liquid Effluent Instrumentation

Surveillance Requirements

Radioactive Liquid Effluent Instrumentation is common between TMI-1 and TMI-2. Surveillances for this instrumentation are specified in ODCM Part I, Surveillance 3.1.1.

3.1.2 Radioactive Gaseous Process and Effluent Monitoring Instrumentation

SURVEILLANCE REQUIREMENTS

3.1.2.1 Each radioactive gaseous process or effluent monitoring instrumentation channel shall be demonstrated OPERABLE by performance of the CHANNEL CHECK, SOURCE CHECK, CHANNEL CALIBRATION, and CHANNEL TEST operations at the frequencies shown in Table 3.1-2.

HISTORY ITEM

Table 3.1-2

Radioactive Gaseous Process and Effluent Monitoring Instrumentation Surveillance Requirements

INSTRUMENT	CHANNEL CHECK	CHANNEL CALIBRATION	CHANNEL FUNCTIONAL TEST	APPLICABILITY
1. Containment Purge Monitoring System				
a. Noble Gas Activity Monitor (2HP-R-225)	D	E	M	NOTE 1
b. Particulate Sampler (2HP-R-225)	W	N/A	N/A	NOTE 1
2. Station Ventilation Monitoring System				
a. Noble Gas Activity Monitor (2HP-R-219) and (2HP-R-219A)	D	E	M	NOTE 1
b. Particulate Sampler (2HP-R-219) and (2HP-R-219A)	W	N/A	N/A	NOTE 1

NOTES:

1. During operation of the monitored system.

HISTORY INFO

3.2 Radioactive Effluents

3.2.1 Liquid Effluents

SURVEILLANCE REQUIREMENTS

3.2.1.1 Concentration

3.2.1.1.1 The radioactivity content of each batch of radioactive liquid waste shall be determined by sampling and analysis in accordance with Table 3.2-1. The results of analyses shall be used with the calculational methods in the ODCM to assure that the concentration at the point of release is maintained within the limits of Control 2.2.1.1.

3.2.1.1.2 Analysis of samples composited from batch releases shall be performed in accordance with Table 3.2-1. The results of the analysis shall be used with the calculational methods in the ODCM to assure that the concentrations at the point of release were maintained within the limits of Control 2.2.1.1.

3.2.1.1.3 The radioactivity concentration of liquids discharged from continuous release points shall be determined by collection and analysis of samples in accordance with Table 3.2-1. The results of the analysis shall be used with the calculational methods of the ODCM to assure that the concentration at the point of release is maintained within the limits of Control 2.2.1.1.

3.2.1.2 Dose Calculations

3.2.1.2.1 Cumulative dose contributions from liquid effluents shall be determined in accordance with the Offsite Dose Calculation Manual (ODCM) at least once a month.

3.2.1.3 Dose Projections

3.2.1.3.1 Doses due to liquid releases shall be projected at least once a month, in accordance with the ODCM.

HISTORY INFO

TABLE 3.2-1

Radioactive Liquid Waste Sampling and Analysis (4, 5)

A. Liquid Releases

Sampling Frequency	Type of Activity Analysis	Detectable Concentration (3)
P Each Batch	Individual Gamma H-3	5E-7 µCi/ml (2) 1E-5 µCi/ml
Q Quarterly Composite (1)	Gross Alpha Sr-90	1E-7 µCi/ml 5E-8 µCi/ml

NOTES:

(1) A COMPOSITE SAMPLE is one in which the quantity of liquid sampled is proportional to the quantity of liquid waste discharged from the plant.

(2) For certain mixtures of gamma emitters, it may not be possible to measure radionuclides in concentrations near this sensitivity limit when other nuclides are present in the sample in much greater concentrations. Under these circumstances, it will be more appropriate to calculate the concentrations of such radionuclides using measured ratios with those radionuclides which are routinely identified and measured.

(3) The detectability limits for radioactivity analysis are based on the technical feasibility and on the potential significance in the environment of the quantities released. For some nuclides, lower detection limits may be readily achievable and when nuclides are measured below the stated limits, they should also be reported.

(4) The results of these analyses should be used as the basis for recording and reporting the quantities of radioactive material released in liquid effluents during the sampling period. In estimating releases for a period when analyses were not performed, the average of the two adjacent data points spanning this period should be used. Such estimates should be included in the effluent records and reports; however, they should be clearly identified as estimates, and the method used to obtain these data should be described.

(5) Deviations from the sampling/analysis regime will be noted in the report specified in ODCM Part IV.

HISTORY INFO

3.2.2 Gaseous Effluents

SURVEILLANCE REQUIREMENTS

3.2.2.1 Dose Rates

3.2.2.1.1 The dose rate due to noble gases in gaseous effluents shall be determined to be within the limits of Control 2.2.2.1.a in accordance with the methods and procedures of the ODCM.

3.2.2.1.2 The dose rate of radioactive materials, other than noble gases, in gaseous effluents shall be determined to be within the limits of Control 2.2.2.1.b in accordance with methods and procedures of the ODCM by obtaining representative samples and performing analyses in accordance with the sampling and analysis program, specified in Table 3.2-2.

3.2.2.2 Dose, Noble Gas

3.2.2.2.1 Cumulative dose contributions from noble gas effluents for the current calendar quarter and current calendar year shall be determined in accordance with the OFFSITE DOSE CALCULATION MANUAL (ODCM) monthly.

3.2.2.3 Dose, Tritium and Radionuclides In Particulate Form

3.2.2.3.1 Cumulative dose contributions from Tritium and radionuclides in particulate form with half lives greater than 8 days for the current calendar quarter and current calendar year shall be determined in accordance with the OFFSITE DOSE CALCULATION MANUAL (ODCM) monthly.

3.2.2.4 Ventilation Exhaust Treatment

3.2.2.4.1 Doses due to gaseous releases from the unit shall be projected monthly in accordance with the ODCM.

HISTORY INFO

TABLE 3.2-2

Radioactive Gaseous Waste Sampling and Analysis (3)

SAMPLE POINT	SAMPLE TYPE	SAMPLING FREQUENCY	TYPE OF ACTIVITY ANALYSIS	DETECTABLE CONCENTRATION(1)(a)
Reactor Building Purge Releases	Gas	P	H-3	1E-6 µCi/cc
		Each Purge	Individual Gamma Emitters	1E-4 µCi/cc (2)
Unit Exhaust Vent Release Points	Gas	M	H-3	1E-6 µCi/cc
		Monthly	Individual Gamma Emitters	1E-4 µCi/cc (2)
	Particulates	W Weekly	Individual (b) Gamma Emitters	1E-10 µCi/cc (2)
		M Monthly Composite	Sr-90	1E-11 µCi/cc
		M Monthly Composite	Gross Alpha Emitters	1E-11 µCi/cc
Reactor Building Breather	Particulates	SA Semi-Annually	Indv. Gamma Emitters (b)	1E-10 µCi/cc (2)
			Sr-90	1E-11 µCi/cc
			Gross Alpha Emitters	1E-11 µCi/cc

(1) The above detectability limits are based on technical feasibility and on the potential significance in the environment of the quantities released. For some nuclides, lower detection limits may be readily achievable and when nuclides are measured below the stated limits, they should also be reported.

(2) For certain mixtures of gamma emitters, it may be possible to measure radionuclides at levels near their sensitivity limits when other nuclides are present in the sample at much higher levels. Under these circumstances, it will be more appropriate to calculate the levels of such radionuclides using observed ratios in the gaseous component in the reactor coolant for those radionuclides which are measurable.

(3) Deviations from the sampling and analysis regime will be noted in the report specified in ODCM Part IV.

HISTORY INFO

TABLE 3.2-2

Radioactive Gaseous Waste Sampling and Analysis Program

Table Notation

a. The LLD is the smallest concentration of radioactive material in a sample that will be detected with 95% probability with 5% probability of falsely concluding that a blank observation represents a "real" signal.

For a particular measurement system (which may include radiochemical separation):

$$LLD = \frac{4.66\ s_b}{E \times V \times 2.22 \times 10^6 \times Y \times \exp(-\lambda \Delta t)}$$

Where

LLD is the lower limit of detection as defined above (as picocurie per unit mass or volume).

S_b is the standard deviation of the background counting rate or of the counting rate of a blank sample as appropriate (as counts per minute).

E is the counting efficiency (as counts per transformation),

V is the sample size (in units of mass or volume),

2.22 is the number of transformations per minute per picocurie,

Y is the fractional radiochemical yield (when applicable),

λ is the radioactive decay constant for the particular radionuclide, and

Δt is the elapsed time between midpoint of sample collection and time of counting (for plant effluents, not environmental samples),

The value of S_b used in the calculation of the LLD for a detection system shall be based on the actual observed variance of the background counting rate or of the counting rate of the blank samples (as appropriate) rather than on an unverified theoretically predicted variance. In calculating the LLD for a radionuclide determined by gamma-ray spectrometry, the background shall include the typical contributions of other radionuclides normally present in the samples. Typical values of E, V, Y, and Δt shall be used in the calculation. The background count rate is calculated from the background counts that are determined to be with ± one FWHM (Full-Width-at-Half-Maximum) energy band about the energy of the gamma-ray peak used for the quantitative analysis for that radionuclide.

HISTORY INFO

TABLE 3.2-2

b. The principal gamma emitters for which the LLD specification applies exclusively are the following radionuclides: Mn-54, Fe-59, Co-58, Co-60, Zn-65, Mo-99, Cs-134, Cs-137, Ce-141 and Ce-144 for particulate emissions. This list does not mean that only these nuclides are to be detected and reported. Other peaks which are measurable and identifiable, together with the above nuclides, shall also be identified and reported. Nuclides which are below the LLD for the analyses shall be reported as "less than" the nuclide's LLD and shall not be reported as being present at the LLD level for that nuclide. The "less than" values shall not be used in the required dose calculations.

HISTORY INFO

3.2.3 Total Radioactive Effluents

3.2.3.1 Dose Calculation

3.2.3.1.1 Cumulative annual dose contributions from liquid and gaseous effluents shall be determined in accordance with Surveillances 3.2.1.2.1, 3.2.2.2.1, and 3.2.2.3.1, including direct radiation contributions from the Unit and from outside storage tanks, and in accordance with the methodology contained in the ODCM.

HISTORY INFO

4.0 PART II REFERENCES

4.1 NUREG-0683, "Final Programmatic Environmental Impact Statement related to decontamination and disposal of radioactive wastes resulting from March 28, 1979, accident Three Mile Island Nuclear Station, Unit 2," March 1981, and its supplements.

4.2 TMI-2 PDMS Technical Specifications, attached to Facility License No. DPR-73

4.3 Title 10, Code of Federal Regulations, "Energy"

4.4 "Statement of Policy Relative to the NRC Programmatic Environmental Impact Statement on the Cleanup of Three Mile Island Unit 2," dated April 27, 1981

4.5 Regulatory Guide 1.109, "Calculation of Annual Doses to Man from Routine Releases of Reactor Effluents for the Purpose of Evaluating Compliance with 10 CFR Part 50, Appendix I," Revision 1, October 1977

4.6 DOE/TIC-27601, Atmospheric Science and Power Reduction

4.7 TMI-1 Technical Specifications, attached to Facility Operating License No. DPR-50

4.8 PDMS - SAR

HISTORY INFO

HISTORY INFO

PART III

EFFLUENT DATA AND CALCULATIONAL METHODOLOGIES

1.0 LIQUID EFFLUENT MONITORS

1.1 TMI-1 and TMI-2 Liquid Radiation Monitor Set Points

The liquid effluent off-line monitors are set such that the concentration(s) of radionuclides in the liquid effluents will not exceed ten times the concentrations specified in 10 CFR 20, Appendix B Table 2, Col 2. Table 1.1 lists the Liquid Effluent Release Points and their parameters; Figure 1.1 provides a Liquid Release Pathway Diagram.

To meet the above limit, the alarm/trip set points for liquid effluent monitors and flow measuring devices are set in accordance with the following equation:

$$\frac{c * f}{F + f} \leq C \qquad \text{(eq 1.1)}$$

where:

C = ten times the effluent concentration of 10 CFR 20 for the site, in µCi/ml.

c = the set point, in µCi/ml, of the liquid effluent monitor measuring the radioactivity concentration in the effluent line prior to dilution and release. The set point is inversely proportional to the maximum volumetric flow of the effluent line and proportional to the minimal volumetric flow of the dilution stream plus the effluent stream. The alert set point value is set to ensure that advance warning occurs prior to exceeding any limits. The high alarm set point value is such that if it were exceeded, it would result in concentrations exceeding ten times the 10 CFR 20 concentrations for the unrestricted area.

f = flow set point as measured at the radiation monitor location, in volume per unit time, but in the same units as F below.

F = flow rate of dilution water measured prior to the release point, in volume per unit time.

The set point concentration is reduced such that concentration contributions from multiple release points would not combine to exceed ten times 10 CFR 20 concentrations. The set point concentration is converted to set point scale units using appropriate radiation monitor calibration factors.

This section of the ODCM is implemented by the Radiation Monitor System Set Points procedure and, for batch releases, the Releasing Radioactive Liquid Waste procedure.

HISTORY INFO

1.2 TMI Liquid Effluent Release Points and Liquid Radiation Monitor Data

TMI-1 has two required liquid radiation monitors. These are RM-L6 and RM-L12. These liquid release point radiation monitors and sample points are shown in Table 1.1. (The TMI outfall radiation monitor, RM-L7, is also listed for information only.)

TMI-2 does not have any required liquid radiation monitors, but does utilize RM-L12, and RM-L7 for release of liquid waste.

1.2.1 RM-L6

RM-L6 is an off-line system, monitoring radioactive batch discharges from the TMI-1 liquid radwaste system (see Figure 1.1). These batch releases are sampled and analyzed per site procedures prior to release. The release rate is based on releasing one of two Waste Evaporator Condensate Storage Tanks (WECST) at a flow which will add less than 10%, of ten times the 10 CFR 20 concentrations [20% for H-3] to radionuclide concentrations in the unrestricted area, including conservative default values for Sr-89, Sr-90, and Fe-55.

The release flow rate used is the most restrictive of two flow rates calculated for each liquid batch release, per the approved plant procedure.

Two Dilution Factors (DF) are calculated to ultimately calculate the batch release flow rate. These two DF's are calculated to insure each radionuclide released to the unrestricted area is less than 10 percent of ten times the 10CFR20 radionuclide concentrations, (20% for H-3), and to ensure each liquid batch release boron concentration to the river will not exceed 0.7 ppm.

The maximum release flow rate is then calculated by dividing the most restrictive (largest) DF into 90 percent of the current dilution flow rate of the Mechanical Draft Cooling Tower (MDCT). This conservative flow rate is then multiplied by 0.9 for the allowable flow rate.

- **Calculation of the 10CFR20 concentration DF:**

  $DF_1 = \Sigma_i (SA_i) \div$ (10% [20% for H-3] of ten times the 10CFR20 concentration)

  SA = Specific Activity of each identified radionuclide

- **Calculation of Boron DF:**

  $DF_2 =$ Actual Tank Boron Concentration ÷ 0.7.

- **Maximum release flow rate calculation:**

  Max Flow = [(MDCT flow gpm * 0.9) ÷ (Most Restrictive DF)] * 0.9

The dilution flow rate used is the current flow rate at the site. The minimum dilution flow rate is 5000 gpm per the TMI-1 FSAR. This ensures this batch release will meet the following equation.

$$\Sigma(C_i/X_i) + (C_{H\text{-}3}/2X_{H\text{-}3}) \leq 0.1, \qquad \text{(eq 1.2)}$$

HISTORY INFO

where: C_i = diluted concentration of the ith radionuclide, other than H-3

X_i = Ten times the concentration for that radionuclide in the unrestricted area (10 CFR 20, App. B, Table 2, Col. 2). A value of 3E-3 µCi/ml for dissolved and entrained noble gases shall be used.

C_{H-3} = diluted concentration of H-3

X_{H-3} = Ten times the concentration for H-3 in the restricted area (10 CFR 20, App. B, Table 2, Col. 2).

The set points for RM-L6 are based on the maximum release rate (30 gpm), a minimum dilution flow (5000 gpm), and 25% of ten times the 10CFR20 concentration for Cs-137, which is the most limiting radionuclide at a concentration of 1.0E-5 µCi/ml. These inputs are used in Equation 1.1 to determine the RM-L-6 High Alarm setpoint for all radionuclides being released. A high alarm on RM-L-6 will close valve WDL-V-257 and terminate any WECST releases to the environment.

1.2.2 RM-L12

RM-L12 is an off-line system, monitoring periodic combined releases from the Industrial Waste Treatment System/Industrial Waste Filtration System (IWTS/IWFS). The input to IWTS/IWFS originates in TMI-2 sumps, (see Figures 1.1 and 1.2) and the TMI-1 Turbine Building sump (see Figure 1.1). The set points are based on the maximum release rate from both IWTS and IWFS simultaneously (see Figure 1.1) a minimum dilution flow rate, and 50% of ten times the 10CFR20 concentration for Cs-137, which is the most limiting radionuclide at a concentration of 1E-5 µCi/ml. These inputs are used in equation 1.1 to determine the RM-L12 High Alarm set point for all radionuclides being released. A high alarm on RM-L12 will close IWTS and IWFS release valves and trip release pumps to stop the release.

1.2.3 RM-L10

RM-L10 was a NaI detector submerged in the TMI-1 Turbine Building Sump. This detector has been removed from service.

1.2.4 RM-L7

RM-L7 is not an ODCM required liquid radiation monitor. RM-L7 is an off-line system, monitoring the TMI outfall to the Susquehanna River (see Figures 1.1 and 1.2). This monitor is the final radiation monitor for TMI-1 and TMI-2 normal liquid effluent releases.

1.3 Control of Liquid Releases

TMI liquid effluent releases are controlled to less than ten times the 10CFR20 concentrations by limiting the percentage of this limit allowable from the two TMI liquid release points. RM-L6 and effluent sampling limit batch releases to less than or equal to 25% for all radionuclides, and RM-L12 and effluent sampling limit releases from TMI-1 and TMI-2 to less than or equal to 50% for Cs-137.

These radiation monitor set points also include built in meter error factors to further ensure that TMI liquid effluent releases are less than ten times the 10CFR20 concentrations to the environment.

HISTORY INFO

The radioactivity content of each batch of radioactive liquid waste is determined prior to release by sampling and analysis in accordance with ODCM Part I Table 3.2-1 or ODCM Part II, Table 3.2-1. The results of analyses are used with the calculational methods in Section 1.1, to assure that the concentration at the point of release is maintained within the ODCM Part I Control 2.2.1.1, and ODCM Part II Control 2.2.1.1.

Post-release analysis of samples composited from batch releases are performed in accordance with ODCM Part I Table 3.2-1 or ODCM Part II Table 3.2-1. The results of the previous post-release analysis shall be used with the calculational methods in the ODCM to assure that the concentrations at the point of release were maintained within the ODCM Part I Control 2.2.1.1, and ODCM Part II Control 2.2.1.1.

The radioactivity concentration of liquids discharged from continuous release points are determined by collection and analysis of samples in accordance with ODCM Part I Table 3.2-1, or ODCM Part II Table 3.2-1. The results of the analysis are used with the calculational methods of the ODCM to assure that the concentration at the point of release is maintained within the ODCM Part I Control 2.2.1.1, and ODCM Part II Control 2.2.1.1.

HISTORY INFO

TABLE 1.1

TMI Liquid Release Point and Liquid Radiation Monitor Data

LIQUID RADIATION MONITOR (DETECTOR)	LOCATION	LIQUID RELEASE POINT (Maximum Volume)	DISCHARGE FLOW RECORDER	RELEASE TERMINATION INTERLOCK (YES/NO) VALVES
RM-L6 (NaI)	281' Elevation TMI-1 Auxiliary Bldg	WECST Batch Releases (8000 gal.)	FT-84	YES WDL-V257
RM-L7 (NaI) **	South end of TMI-1 MDCT	Station Discharge TMI-1 and TMI-2,	FT-146	YES WDL-V257 *WDL-R-1311
RM-L12 (NaI)	IWFS Building NW Corner	IWTS/IWFS Continuous Releases (300,000/ 80,000 gal.)	FT-342/ FT-373	YES IW-V73, IW-P16,17,18 IW-V279, IW-P29,30

* WDL-R-1311 has been flanged off as a TMI-2 liquid outfall.
** RM-L7 is not an ODCM required liquid radiation monitor.

HISTORY INFO

TABLE 1.2

TMI-2 Sump Capacities

Sump	Total Capacity Gallons	Gallons per Inch
Turbine Building Sump	1346	22.43
Circulating Water Pump House Sump	572	10.59
Control Building Area Sump	718	9.96
Tendon Access Galley Sump	538	9.96
Control to Service Building Sump	1346	22.43
Contaminated Drain Tank Room Sump	135	3.80
Chlorinator House Sump	---	---
Water Treatment Sump**	1615	22.43
Air Intake Tunnel Normal Sump	700	---
Air Intake Tunnel Emergency Sump	100000	766.00
Condensate Polisher Sump*	2617	62.31
Sludge Collection Sump**	1106	26.33
Heater Drain Sump	---	---
Solid Waste Staging Facility Sump	1476	24.00
Auxiliary Building Sump	10102	202.00
Decay Heat Vault Sump	479	10.00
Building Spray Vault Sump	479	10.00

* Condensate Polisher Sump is deactivated and in PDMS condition.
** The Water Treatment and Sludge Collection Sumps will be deactivated for PDMS.

HISTORY INFO

Figure 1.1
TMI-1 Liquid Effluent Pathways

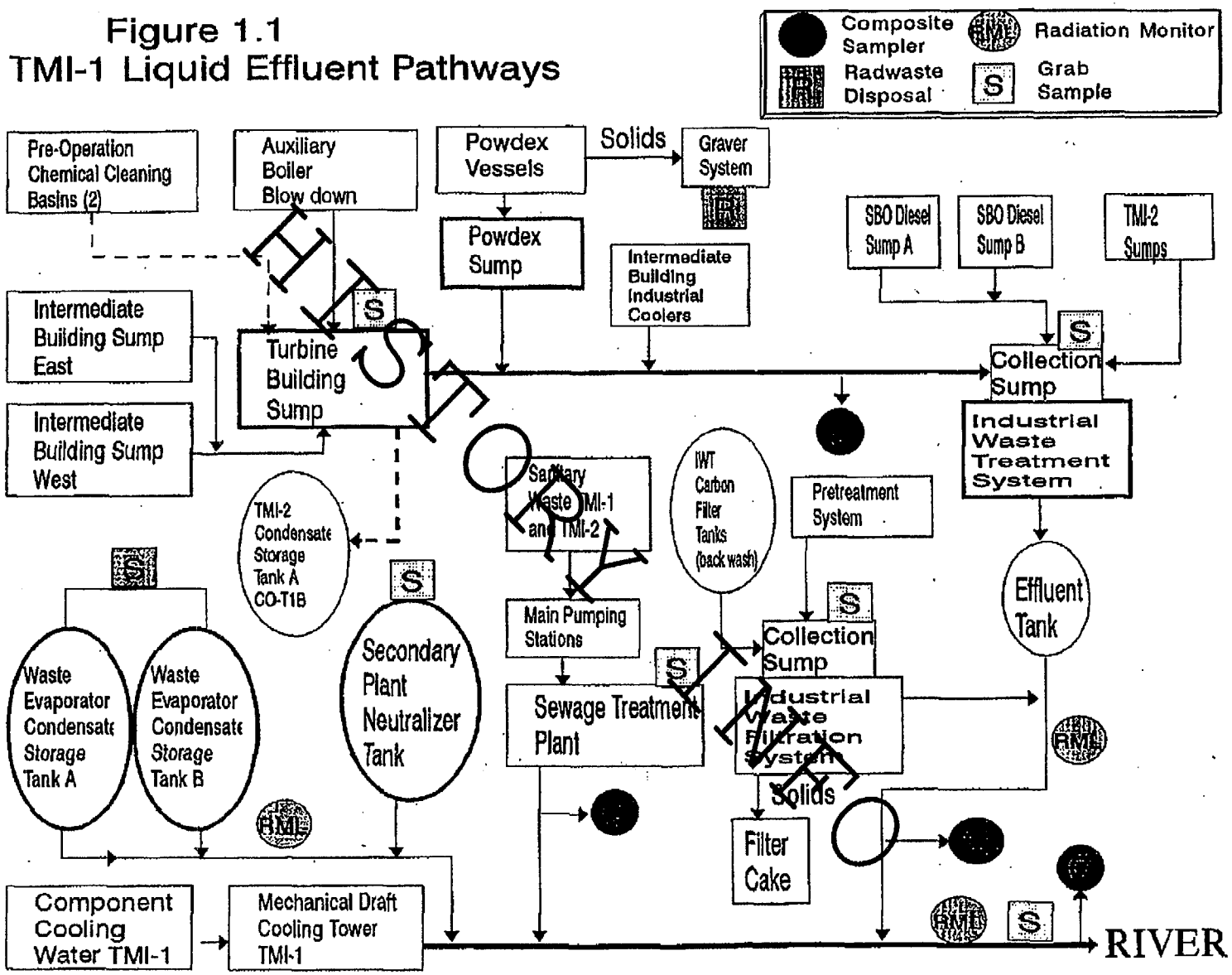

FIGURE 1.2

TMI-2 Liquid Effluent Pathways

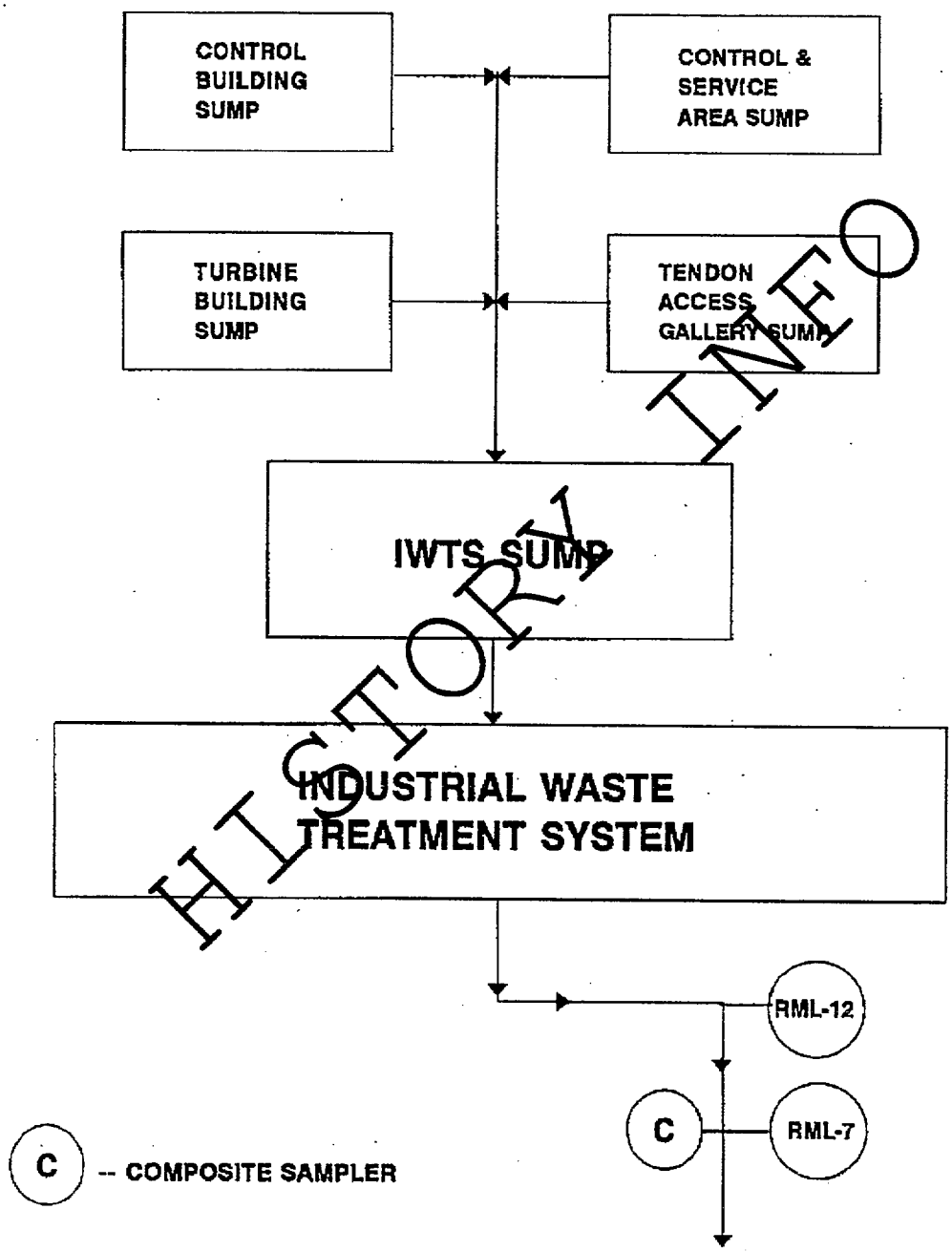

HISTORY INFO

2.0 LIQUID EFFLUENT DOSE ASSESSMENT

2.1 Liquid Effluents - 10 CFR 50 Appendix I

The dose from liquid effluents results from the consumption of fish and drinking water. The location of the nearest potable water intake is PP&L Brunner Island Steam Electric Station located downstream of TMI. The use of the flow of the Susquehanna River as the dilution flow is justified based on the complete mixing in the river prior to the first potable water supply, adequately demonstrated by flume tracer die studies and additional liquid effluent release studies conducted using actual TMI-1 tritium releases. Other pathways contribute negligibly at Three Mile Island. The dose contribution from all radionuclides in liquid effluents released to the unrestricted area is calculated using the following expression:

$$\text{Dose } j = \sum_i \sum_j (\Delta t) \times (C_i) \times \left[\left(AW_{ij} \times \frac{f}{FR} \right) + \left(AF_{ij} \times \frac{f}{FD} \times \frac{1}{DF} \right) \right] \qquad \text{(eq 2.1)}$$

where:

Dose j = the cumulative dose commitment to the total body or any organ, j, from the liquid effluents for the total time period, in mrem.

Δt = the length of the time period of actual releases, over which C_i and f are averaged for all liquid releases, in hours.

C_i = the average concentration of radionuclide, i, in undiluted liquid effluent during time period Δt from any liquid release, in µCi/ml.

> **NOTE**
>
> For Fe-55, Sr-89, Sr-90, prior to batch releases conservative concentration values will be used in the initial dose calculation based on similar past plant conditions. LLD values are not used in dose calculations.

f = undiluted liquid waste flow, in gpm.

FD = plant dilution water flowrate during the period of release, in gpm

FR = actual river flowrate during the period of release or average river flowrate for the month the release is occurring, in gpm.

DF = dilution factor as a result of mixing effects in the near field of the discharge structure of 0.2 (NUREG 0133) or taken to be 5 based on the inverse of 0.2.

AWij and AFij = the site-related ingestion dose commitment factor to the total body or any organ, j, for each identified principle gamma and beta emitter, in mrem/hr per µCi/ml. AW is the factor for the water pathway and AF is the factor for the fish pathway.

HISTORY INFO

Values for AWij are determined by the following equation:

$$AW_{ij} = (1.14E5) \times (U_w) \times (DF_{ij}) \qquad \text{(eq 2.2)}$$

where:

1.14E5 = (1.0E6 pCi/μCi) x (1.0E3 ml/kg) ÷ (8760 hr/yr)

Uw = Water consumption rate for adult is 730 kg/yr (Reg. Guide 1.109, Rev. 1).

DFij = ingestion dose conversion factor for radionuclide, i, for adults total body and for "worst case" organ, j, in mrem/pCi, from Table 2.1 (Reg. Guide 1.109)

Values for AF_{ij} are determined by the following equation:

AFij = (1.14E5) x (Uf) x (DFij) x (BFi) (eq 2.2.2)

where:

1.14E5 = defined above

Uf = adult fish consumption, assumed to be 21 kg/yr (Reg. Guide 1.109, Rev. 1).

DFij = ingestion dose conversion factor for radionuclide, i, for adult total body and for "worst case" organ, j, in mrem/pCi, from Table 2.1 (Reg. Guide 1.109, Rev. 1).

BFi = Bioaccumulation factor for radionuclide, i, in fish, in pCi/kg per pCi/L from Table 2.2 (Reg. Guide 1.109, Rev. 1).

2.2 TMI Liquid Radwaste System Dose Calcs Once/Month

ODCM Part I Control 2.2.1.3 and TMI-2 PDMS Tech Spec Section 6.7.4.a.6 requires that appropriate portions of the liquid radwaste treatment system shall be used to reduce the radioactive materials in liquid wastes prior to their discharge when the monthly projected doses due to the liquid effluent releases from each unit to unrestricted areas would exceed 0.06 mrem to the total body or 0.2 mrem to any organ in any calendar month. The following calculational method is provided for performing this dose projection.

At least once per month, the total dose from all liquid releases for the quarter-to-date will be divided by the number of days into the quarter and multiplied by 31. Also, this dose projection shall include the estimated dose due to any anticipated unusual releases during the period for which the projection is made. If this projected dose exceeds 0.06 mrem total body or 0.2 mrem any organ, appropriate portions of the Liquid Radwaste Treatment System, as defined in Section 3.1, shall be used to reduce radioactivity levels prior to release.

At the discretion of Radiological Engineering, time periods other than the current quarter-to-date may be used to project doses if the dose per day in the current quarter-to-date is not believed to be representative of the dose per day projected for the next month.

HISTORY INFO

2.3 Alternative Liquid Dose Calculational Methodology

As an alternative, models in, or based upon, those presented in Regulatory Guide 1.109 (Rev. 1) may be used to make a comprehensive dose assessment. Default parameter values from Reg. Guide 1.109 (Rev. 1) and/or actual site specific data are used where applicable.

As an alternative dose calculational methodology TMI calculates doses using SEEDS (simplified environmental effluent dosimetry system).

The onsite and SEEDS calculational models use actual liquid release data with actual monthly Susquehanna River flow data to assess the dispersion of effluents in the river.

HISTORY INFO

TABLE 2.1

Liquid Dose Conversion Factors (DCF): DF_{ij}

Page 1 of 3

Ingestion Dose Factors for Adults*
(MREM Per PCI Ingested)

NUCLIDE		BONE	LIVER	T. BODY	THYROID	KIDNEY	LUNG	GI-LLI
H	3	NO DATA	1.05E-07	1.05E-07	1.05E-07	1.05E-07	1.05E-07	1.05E-07
C	14	2.84E-06	5.68E-07	5.68E-07	5.68E-07	5.68E-07	5.68E-07	5.68E-07
NA	24	1.70E-06	1.70E-06	1.70E-06	1.70E-06	1.70E-06	1.70E-06	1.70E-06
CR	51	NO DATA	NO DATA	2.66E-09	1.59E-09	5.86E-10	3.53E-09	6.69E-07
MN	54	NO DATA	4.57E-06	8.72E-07	NO DATA	1.36E-06	NO DATA	1.40E-05
MN	56	NO DATA	1.15E-07	2.04E-08	NO DATA	1.48E-07	NO DATA	3.67E-06
FE	55	2.75E-06	1.90E-06	4.43E-07	NO DATA	NO DATA	1.06E-06	1.09E-06
FE	59	4.34E-06	1.02E-05	3.91E-06	NO DATA	NO DATA	2.85E-06	3.40E-05
CO	58	NO DATA	7.45E-07	1.67E-06	NO DATA	NO DATA	NO DATA	1.51E-05
CO	60	NO DATA	2.14E-06	4.72E-06	NO DATA	NO DATA	NO DATA	4.02E-05
NI	63	1.30E-04	9.01E-06	4.36E-06	NO DATA	NO DATA	NO DATA	1.88E-06
NI	65	5.28E-07	6.86E-08	2.13E-08	NO DATA	NO DATA	NO DATA	1.74E-06
CU	64	NO DATA	8.33E-08	3.91E-08	NO DATA	2.10E-07	NO DATA	7.10E-06
ZN	65	4.84E-06	1.54E-05	6.96E-06	NO DATA	1.03E-05	NO DATA	9.70E-06
ZN	69	1.03E-08	1.97E-08	1.37E-09	NO DATA	1.28E-08	NO DATA	2.96E-09
BR	83	NO DATA	NO DATA	4.02E-08	NO DATA	NO DATA	NO DATA	5.79E-08
BR	84	NO DATA	NO DATA	5.21E-08	NO DATA	NO DATA	NO DATA	4.09E-13
BR	85	NO DATA	NO DATA	2.14E-09	NO DATA	NO DATA	NO DATA	LT E-24
RB	86	NO DATA	2.11E-05	9.83E-06	NO DATA	NO DATA	NO DATA	4.16E-06
RB	88	NO DATA	6.05E-08	3.21E-08	NO DATA	NO DATA	NO DATA	8.36E-19
RB	89	NO DATA	4.01E-08	2.82E-08	NO DATA	NO DATA	NO DATA	2.33E-21
SR	89	3.08E-04	NO DATA	8.84E-06	NO DATA	NO DATA	NO DATA	4.94E-05
SR	90	7.58E-03	NO DATA	1.86E-03	NO DATA	NO DATA	NO DATA	2.19E-04
SR	91	5.67E-06	NO DATA	2.29E-07	NO DATA	NO DATA	NO DATA	2.70E-05
SR	92	2.15E-06	NO DATA	9.30E-08	NO DATA	NO DATA	NO DATA	4.26E-05
Y	90	9.62E-09	NO DATA	2.58E-10	NO DATA	NO DATA	NO DATA	1.02E-04

HISTORY INFO

TABLE 2.1

Liquid Dose Conversion Factors (DCF): DF_{ij}

Page 2 of 3

Ingestion Dose Factors for Adults*
(MREM Per PCI Ingested)

NUCLIDE		BONE	LIVER	T. BODY	THYROID	KIDNEY	LUNG	GI-LLI
Y	91M	9.09E-11	NO DATA	3.52E-12	NO DATA	NO DATA	NO DATA	2.67E-10
Y	91	1.41E-07	NO DATA	3.77E-09	NO DATA	NO DATA	NO DATA	7.76E-05
Y	92	8.45E-10	NO DATA	2.47E-11	NO DATA	NO DATA	NO DATA	1.48E-05
Y	93	2.68E-09	NO DATA	7.40E-11	NO DATA	NO DATA	NO DATA	8.50E-05
ZR	95	3.04E-08	9.75E-09	6.60E-09	NO DATA	1.56E-08	NO DATA	3.09E-05
ZR	97	1.68E-09	3.39E-10	1.55E-10	NO DATA	2.12E-10	NO DATA	1.05E-04
NB	95	6.22E-09	3.46E-09	1.86E-09	NO DATA	3.42E-09	NO DATA	2.10E-05
MO	99	NO DATA	4.31E-06	8.20E-07	NO DATA	9.76E-06	NO DATA	9.99E-06
TC	99M	2.47E-10	6.98E-10	8.89E-09	NO DATA	1.06E-08	3.42E-10	4.13E-07
TC	101	2.54E-10	3.66E-10	3.59E-09	NO DATA	6.59E-09	1.87E-10	1.10E-21
RU	103	1.85E-07	NO DATA	7.97E-08	NO DATA	7.06E-07	NO DATA	2.16E-05
RU	105	1.54E-08	NO DATA	6.08E-09	NO DATA	1.99E-07	NO DATA	9.42E-06
RU	106	2.75E-06	NO DATA	3.48E-07	NO DATA	5.31E-06	NO DATA	1.78E-04
AG	110M	1.60E-07	1.48E-07	8.79E-08	NO DATA	2.91E-07	NO DATA	6.04E-05
SB	125	1.79E-06	2.00E-08	4.26E-07	1.82E-09	0.0	1.38E-06	1.97E-05
TE	125M	2.68E-06	9.71E-07	3.59E-07	8.06E-07	1.09E-05	NO DATA	1.07E-05
TE	127M	6.77E-06	2.42E-06	8.25E-07	1.73E-06	2.75E-05	NO DATA	2.27E-05
TE	127	1.10E-07	3.56E-08	2.38E-08	8.15E-08	4.48E-07	NO DATA	8.68E-06
TE	129M	1.15E-05	4.29E-06	1.82E-06	3.95E-06	4.80E-05	NO DATA	5.79E-05
TE	129	3.14E-08	1.18E-08	7.65E-09	2.41E-08	1.32E-07	NO DATA	2.37E-08
TE	131M	1.73E-06	8.46E-07	7.05E-07	1.34E-06	8.57E-06	NO DATA	8.40E-05
TE	131	1.97E-08	8.23E-09	6.22E-09	1.62E-08	8.63E-08	NO DATA	2.79E-09
TE	132	2.52E-06	1.63E-06	1.53E-06	1.80E-06	1.57E-05	NO DATA	7.71E-05
I	130	7.56E-07	2.23E-06	8.80E-07	1.89E-04	3.48E-06	NO DATA	1.92E-06
I	131	4.16E-06	5.95E-06	3.41E-06	1.95E-03	1.02E-05	NO DATA	1.57E-06
I	132	2.03E-07	5.43E-07	1.90E-07	1.90E-05	8.65E-07	NO DATA	1.02E-07
I	133	1.42E-06	2.47E-06	7.53E-07	3.63E-04	4.31E-06	NO DATA	2.22E-06
I	134	1.06E-07	2.88E-07	1.03E-07	4.99E-06	4.58E-07	NO DATA	2.51E-10

HISTORY INFO

TABLE 2.1

Liquid Dose Conversion Factors (DCF): DF_{ij}

Page 3 of 3

Ingestion Dose Factors for Adults*
(MREM Per PCI Ingested)

NUCLIDE		BONE	LIVER	T. BODY	THYROID	KIDNEY	LUNG	GI-LLI
I	135	4.43E-07	1.16E-06	4.28E-07	7.65E-05	1.86E-06	NO DATA	1.31E-06
CS	134	6.22E-05	1.48E-04	1.21E-04	NO DATA	4.79E-05	1.59E-05	2.59E-06
CS	136	6.51E-06	2.57E-05	1.85E-05	NO DATA	1.43E-05	1.96E-06	2.92E-06
CS	137	7.97E-05	1.09E-04	7.14E-05	NO DATA	3.70E-05	1.23E-05	2.11E-06
CS	138	5.52E-08	1.09E-07	5.40E-08	NO DATA	8.01E-08	7.91E-09	4.65E-13
BA	139	9.70E-08	6.91E-11	2.84E-09	NO DATA	6.46E-11	3.92E-11	1.72E-07
BA	140	2.03E-05	2.55E-08	1.33E-06	NO DATA	8.67E-09	1.46E-08	4.18E-05
BA	141	4.71E-08	3.56E-11	1.59E-09	NO DATA	3.31E-11	2.02E-11	2.22E-17
BA	142	2.13E-08	2.19E-11	1.34E-09	NO DATA	1.85E-11	1.24E-11	3.00E-26
LA	140	2.50E-09	1.26E-09	3.33E-10	NO DATA	NO DATA	NO DATA	9.25E-05
LA	142	1.28E-10	5.82E-11	1.45E-11	NO DATA	NO DATA	NO DATA	4.25E-07
CE	141	9.36E-09	6.33E-09	7.18E-10	NO DATA	2.94E-09	NO DATA	2.42E-05
CE	143	1.65E-09	1.22E-06	1.35E-10	NO DATA	5.37E-10	NO DATA	4.56E-05
CE	144	4.88E-07	2.04E-07	2.62E-08	NO DATA	1.21E-07	NO DATA	1.65E-04
PR	143	9.20E-09	3.69E-09	4.56E-10	NO DATA	2.13E-09	NO DATA	4.03E-05
PR	144	3.01E-11	1.26E-11	1.53E-12	NO DATA	7.05E-12	NO DATA	4.33E-18
ND	147	6.29E-09	7.27E-09	4.35E-10	NO DATA	4.25E-09	NO DATA	3.49E-05
W	187	1.03E-07	8.61E-08	3.01E-08	NO DATA	NO DATA	NO DATA	2.82E-05
NP	239	1.19E-09	1.17E-10	6.45E-11	NO DATA	3.65E-10	NO DATA	2.40E-05

* Dose factors of internal exposure are for continuous intake over a one-year period and include the dose commitment over a 50-year period; from Reg. Guide 1.109 (Rev. 1). Additional dose factors for nuclides not included in this table may be obtained from NUREG-0172.

HISTORICAL

TABLE 2.2

Bioaccumulation Factors, BF_i

Bioaccumulation Factors to be Used in the Absence of Site-Specific Data*
(pCi/kg per pCi/liter)

ELEMENT	FRESHWATER	
	FISH	INVERTEBRATE
H	9.0E-01	9.0E-01
C	4.6E+03	9.1E+03
NA	1.0E+02	2.0E+02
CR	2.0E+02	2.0E+03
MN	4.0E+02	9.0E+04
FE	1.0E+02	3.2E+03
C0	5.0E+01	2.0E+02
NI	1.0E+02	1.0E+03
CU	5.0E+01	4.0E+02
ZN	2.0E+03	1.0E+04
BR	4.2E+02	3.3E+02
RB	2.0E+03	1.0E+03
SR	3.0E+01	1.0E+02
Y	2.5E+01	1.0E+03
ZR	3.3E+00	6.7E+00
NB	3.0E+04	1.0E+02
MO	1.0E+01	1.0E+01
TC	1.5E+01	5.0E+00
RU	1.0E+01	3.0E+02
RH	1.0E+01	3.0E+02
***AG-110m	2.30E+1	7.70E+2
**SB	1.0E+00	1.0E+00
TE	4.0E+02	6.1E+03
I	1.5E+01	5.0E+00
CS	2.0E+03	1.0E+03
BA	4.0E+00	2.0E+02
LA	2.5E+01	1.0E+03
CE	1.0E+00	1.0E+03
PR	2.5E+01	1.0E+03
ND	2.5E+01	1.0E+03
W	1.2E+03	1.0E+01
NP	1.0E+01	4.0E+02

* Bioaccumulation factor values are taken from Reg. Guide 1.109 (Rev. 1), Table A-1j.

** Sb bioaccumulation factor value is taken from EPRI NP-3840.

*** Ag bioaccumulation factor value is taken from Reg. Guide 1.109 (Rev. 0), Table A-8.

HISTORY ONLY

3.0 TMI LIQUID EFFLUENT WASTE TREATMENT SYSTEMS

3.1 TMI-1 Liquid Effluent Waste Treatment System

3.1.1 Description of the Liquid Radioactive Waste Treatment System (see Figure 3.1)

Reactor Coolant Train

a. Water Sources - (3) Reactor Coolant Bleed Tanks (RCBT)
- (1) Reactor Coolant Drain Tank (RCDT)

b. Liquid Processing - Reactor Coolant Waste Evaporator (see Figure 3.2)
- Demineralizers prior to release

c. Liquid Effluent for Release - (2) Waste Evaporator Condensate Storage Tanks
- (WECST)

d. Dilution - Mechanical Draft Cooling Tower (0-38k gpm)
- River Flow (2E7 gpm average)

Miscellaneous Waste Train

a. Water sources: - Auxiliary Building Sump
- Reactor Building Sump
- Miscellaneous Waste Storage Tank
- Laundry Waste Storage Tank
- Neutralizer Mixing Tank
- Neutralizer Feed Tank
- Used Precoat Tank
- Borated Water Tank Tunnel Sump
- Heat Exchanger Vault Sump
- Tendon Access Galley Sump
- Spent Fuel Pool Room Sump
- TMI-2 Miscellaneous Waste Holdup Tank

b. Liquid Processing - Miscellaneous Waste Evaporator, MWE (see Figure 3.2)
- Demineralizers prior to release

c. Liquid Effluent for Release - (2) Waste Evaporator Condensate Storage Tanks
- (WECST)

d. Dilution - Mechanical Draft Cooling Tower (0-38k gpm)
- River Flow (2E7 gpm average)

HISTORY INFO

3.2 Operability of the TMI-1 Liquid Effluent Waste Treatment System

3.2.1 The TMI-1 Liquid Waste Treatment System as described in Section 11 of the TMI-1 Final Safety Analysis Report is considered to be operable when one of each of the following pieces of equipment is available to perform its intended function:

a) Miscellaneous Waste Evaporator (WDL-Z1B) or Reactor Coolant Evaporator (WDL-Z1A)

b) Waste Evaporator Condensate Demineralizer (WDL-K3 A or B)

c) Waste Evaporator Condensate Storage Tank (WDL-T 11 A or B)

d) Evaporator Condensate Pumps (WDL-P 14 A or B)

3.2.2 TMI-1 Representative Sampling Prior to Discharge

All liquid releases from the TMI-1 Liquid Waste Treatment System are made through the Waste Evaporator Condensate Storage Tanks. To provide thorough mixing and a representative sample, the contents of the tank are recirculated using one of the Waste Evaporator Condensate Transfer Pumps.

3.3 TMI-2 Liquid Effluent Waste Treatment System

3.3.1 Description of the TMI-2 Liquid Radioactive Waste Treatment System

The TMI-2 Liquid Radioactive Waste Treatment System has been out of service since the TMI-2 Accident in 1979. TMI-2 Liquid Radioactive Waste is processed by the TMI-1 system described in Section 3.1 prior to release. In addition, TMI-2 releases water from various sumps and tanks to the river (see Figures 1.1 and 1.2). These processes are governed by plant procedures that encompass proper sampling, sample analysis, and radiation monitoring techniques.

HISTORY INFO

FIGURE 3.1

TMI-1 Liquid Radwaste

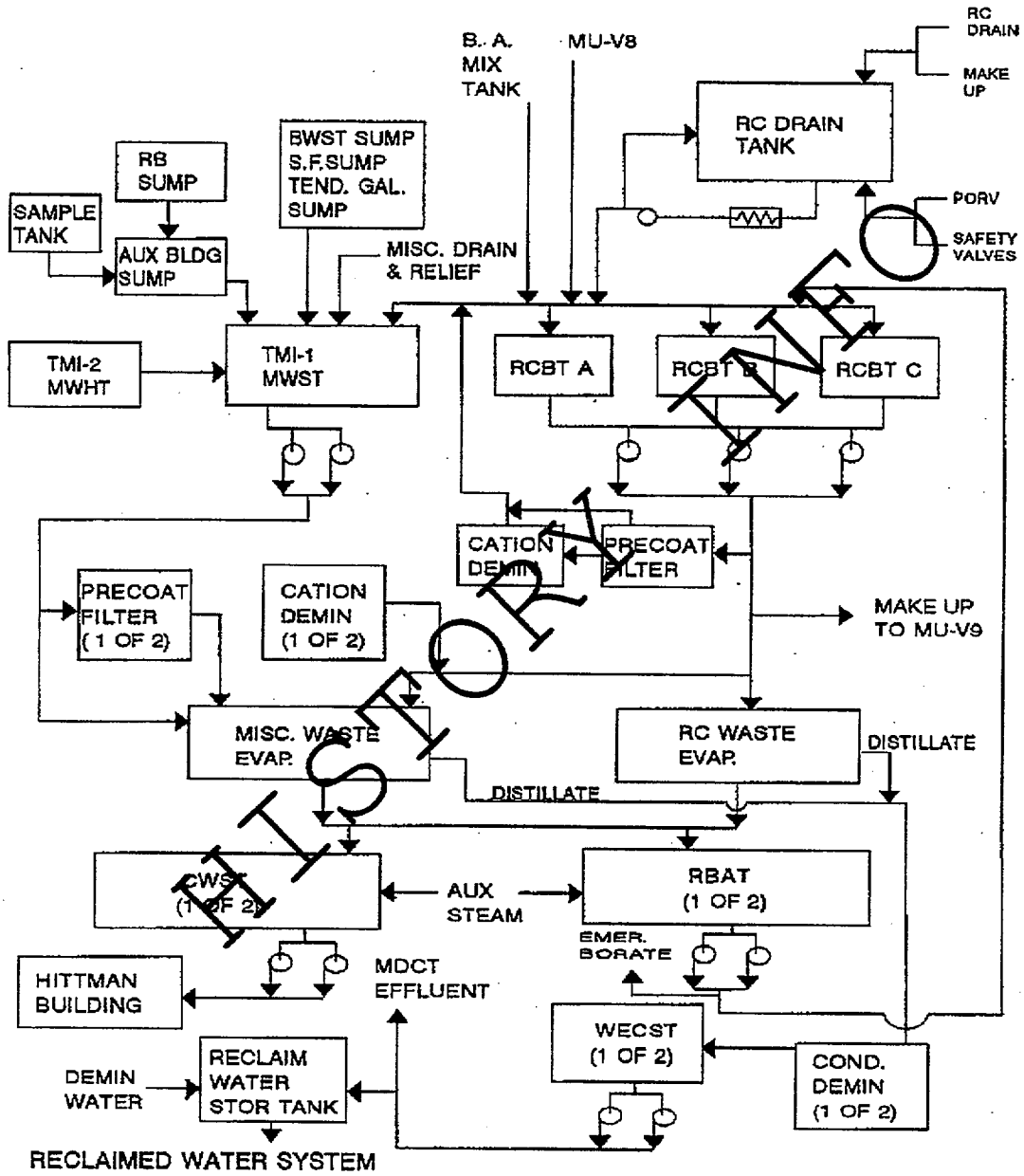

HISTORY ONLY

FIGURE 3.2

TMI-1 Liquid Waste Evaporators

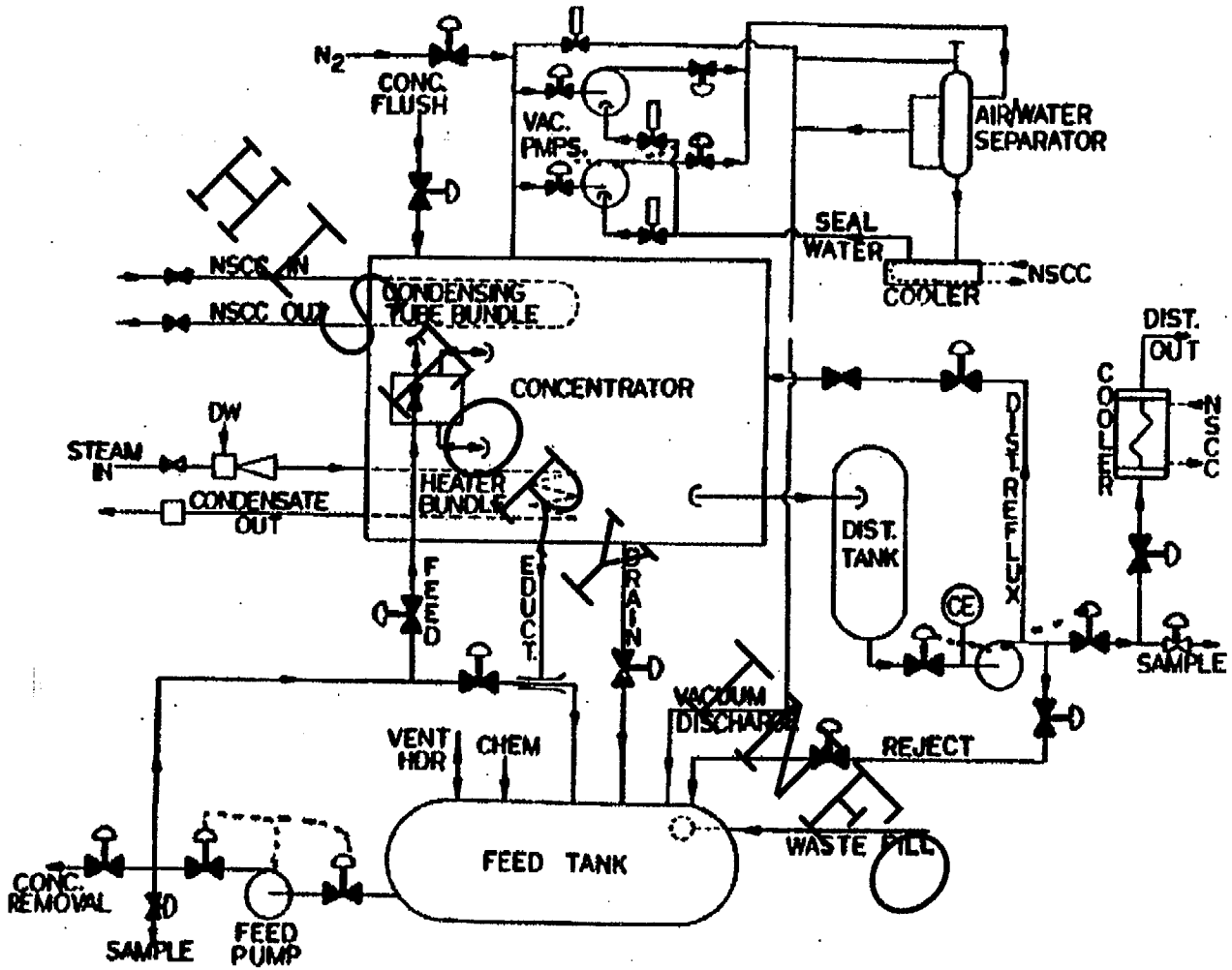

4.0 GASEOUS EFFLUENT MONITORS

4.1 TMI-1 Noble Gas Monitor Set Points

The gaseous effluent monitor set points are established for each gaseous effluent radiation monitor to assure concentrations of radionuclides in gaseous effluents do not exceed the limits set forth in ODCM Part I Control 2.2.2.1. Table 4.1 lists Gaseous Effluent Release Points and their associated parameters; Figure 4.1 provides a Gaseous Effluent Release Pathway Diagram.

The set points are established to satisfy the more restrictive set point concentration in the following two equations:

$$500 > \sum_i (c_i)(F)(K_i)(Dv) \qquad \text{(eq 4.1.1)}$$

and

$$3000 > \sum_i (c_i)(L_i + 1.1\ M_i)(Dv)(F) \qquad \text{(eq 4.1.2)}$$

where:

c_i = set point concentration based on Xe-133 equivalent, in μCi/cc

F = gaseous effluent flowrate at the monitor, in cc/sec

K_i = total body dose factor, in mrem/yr per μCi/m^3 from Table 4.3

Dv = highest sector annual average gaseous atmospheric dispersion factor (X/Q) at or beyond the unrestricted area boundary, in sec/m^3, from Table 4.4 for station vent releases and Table 4.5 for all other releases, (Condenser off gas, ESF FHB, and ground releases). Maximum values presently used are 7.17E-7 sec/m^3 at sector NNE for station vent, and 1.16E-5 sec/m^3 at sectors N and WNW for all other releases.

L_i = skin dose factor due to beta emissions from radionuclide i, in mrem/yr per μCi/m^3 from Table 4.3.

M_i = air dose factor due to gamma emissions from radionuclide i, in mrad/yr per μCi/m^3 from Table 4.3.

1.1 = mrem skin dose per mrad air dose.

500 = annual whole body dose rate limit for unrestricted areas, in mrem/yr.

3000 = annual skin dose rate limit for unrestricted areas, in mrem/yr.

The set point concentration is further reduced such that the concentration contributions from multiple release points would not combine to exceed ODCM Control limits.

The set point concentration is converted to set point scale units on each radiation monitor using appropriate calibration factors.

HISTORY INFO

This section of the ODCM is implemented by the Radiation Monitor System Set Points procedure and the procedure for Releasing Radioactive Gaseous Waste.

HISTORY INFO

This section of the ODCM is implemented by the Radiation Monitor System Set Points procedure and the procedure for Releasing Radioactive Gaseous Waste.

HISTORY INFO

4.2 TMI-1 Particulate and Radioiodine Monitor Set Points

Set points for monitors which detect radionuclides other than noble gases are also established to assure that concentrations of these radionuclides in gaseous effluents do not exceed the limits of ODCM Part I Control 2.2.2.1.

Set points are established so as to satisfy the following equations:

$$1500 > \sum_i (c_i)(F)(P_i)(Dv) \qquad \text{(eq 4.2)}$$

where:

c_i = set point concentration based on I-131 equivalent, in µCi/cc

F = gaseous effluent flow rate at the monitor, in cc/sec

P_i = pathway dose parameter, in mrem/yr per µCi/m3 for the inhalation pathway from Table 4.6. The dose factors are based on the actual individual organ and most restrictive age group (child) (NUREG-0133).

NOTE
Appendix A contains P_i calculational methodology.

1500 = annual dose rate limit to any organ from particulates and radioiodines and radionuclides (other than noble gases) with half lives greater than eight days in mrem/yr.

Dv = highest sector annual average gaseous dispersion factor (X/Q or D/Q) at or beyond the unrestricted area boundary from Table 4.4 for releases from the station vent and Table 4.5 for all other releases. X/Q is used for the inhalation pathway. Maximum values of X/Q presently used are 7.17E-7 sec/m3 for station vent, at sector SE, and 1.16E-5 sec/m3 for all other releases, at sectors N and WNW.

The set point concentration is further reduced such that concentration contributions from multiple release points would not combine to exceed ODCM Control limits.

The set point concentration is converted to set point scale units on each radiation monitor using appropriate calibration factors.

This section of the ODCM is implemented by the Radiation Monitor Systems Set Points procedure and the procedure for Releasing Radioactive Gaseous Waste.

HISTORY INFO

4.3 TMI-2 Gaseous Radiation Monitor Set Points

TMI-2 Gaseous Radiation Monitors have their set points described in TMI Plant Procedure 1101-2.1. Figure 4.5 provides a gaseous effluent release pathway diagram. Table 4.2 provides TMI-2 Radiation Monitor Data.

These set points are set in accordance with the Controls delineated in Part II of this ODCM.

HISTORY INFO

4.4 TMI-1 Gaseous Effluent Release Points and Gaseous Radiation Monitor Data

TMI-1 has eleven (11) required effluent gaseous radiation monitors. These are RM-A4, RM-A5, RM-A15, RM-A6, RM-A7, RM-A8, RM-A9, RM-A14, ALC-RMI-18, WHP-RIT-1, and RLM-RM-1. These gaseous release points, radiation monitors, and sample points are shown in Table 4.1.

4.4.1 RM-A4/RM-A6 Fuel Handling and Auxiliary Building Exhaust

RM-A4 is the particulate, radioiodine and gaseous radiation monitor for the TMI-1 Fuel Handling Building Ventilation (see Figures 4.1 and 4.2). RM-A6 is the particulate, radioiodine, and gaseous radiation monitor for the TMI-1 Auxiliary Building Ventilation (see Figures 4.1 and 4.2). High alarms on RM-A4 or RM-A6 noble gas channels will initiate shutdown of the related building ventilation air supply system. These two radiation monitors concurrently will satisfy requirements for the Station Vent release point in place of RM-A8.

4.4.2 RM-A8 Station Ventilation Exhaust

RM-A8 is the particulate, radioiodine and gaseous radiation monitor for the TMI-1 Station Ventilation (see Figures 4.1 and 4.2). This in plant effluent radiation monitor also has an associated sampling panel with sampling lines located before the sample filters. High alarm on RM-A8 noble gas low channel will initiate shutdown of the Station Ventilation air supply systems. (The Fuel Handling and Auxiliary Building Ventilation). This radiation monitor satisfies requirements for the Station Vent release point in place of RM-A4 and RM-A6.

4.4.3 RM-A5/RM-A15 Condenser Off Gas Exhaust

RM-A5 is the gaseous radiation monitor for the TMI-1 Condenser Off Gas exhaust (see Figures 4.1 and 4.4). RM-A15 is the back up gaseous radiation monitor for the TMI-1 Condenser Off Gas exhaust (see Figures 4.1 and 4.4). High alarms on RM-A5 low channel or RM-A15 noble gas channels will initiate the MAP-5 Radioiodine Processor Station. These two radiation monitors together satisfy requirements for the Condenser Off Gas release point.

4.4.4 RM-A7 Waste Gas Decay Tank Exhaust

RM-A7 is the gaseous radiation monitor for the TMI-1 Waste Gas Decay tanks (see Figures 4.1 and 4.2). This in plant effluent radiation monitor also has an associated sampling panel. High alarm on RM-A7 noble gas channel will initiate shutdown of the Waste Gas Decay Tank release in progress. This radiation monitor satisfies requirements for batch gaseous releases to the Station Vent release point.

4.4.5 RM-A9 Reactor Building Purge Exhaust

RM-A9 is the particulate, radioiodine and gaseous radiation monitor for the TMI-1 Reactor Building Purge system (see Figures 4.1 and 4.3). This in plant effluent radiation monitor also has an associated sampling panel with sampling lines located before the sample filters. High alarm on RM-A9 noble gas low channel will initiate shutdown of the Reactor Building Purge System. This radiation monitor satisfies requirements for the Reactor Building Purge System release point.

HISTORY ONLY

4.4.6 RM-A14 ESF FHB Ventilation System

RM-A14 is the gaseous radiation monitor for the TMI-1 Emergency Safeguards Features (ESF) Fuel Handling Building Exhaust system (see Figures 4.1 and 4.2). This in plant effluent radiation monitor also has an associated sampling panel with sampling lines located before the sampler filters. High alarm on RM-A14 noble gas channel will initiate shutdown of the ESF Fuel Handling Building Exhaust System. This radiation monitor satisfies requirements for the ESF Fuel Handling Building Exhaust System release point.

4.4.7 ALC-RMI-18 Chemical Cleaning Facility (CCF) Ventilation Exhaust

ALC-RMI-18 is an Victoreen particulate, radioiodine, and gaseous radiation monitor for the Chemical Cleaning building exhaust. This monitor is located in the Chemical Cleaning building on the ground floor, and has an associated sample panel. Sampling for particulate activity is performed off of the monitor.

4.4.8 WHP-RIT-1 Waste Handling and Packaging Facility (WHPF) Exhaust

WHP-RIT-1 is an Eberline AMS-3 particulate radiation monitor for the TMI WHPF. The monitor is located in the Mechanical Equipment Room in the WHPF. Sampling for particulate activity is performed off of the monitor. A high alarm will initiate shutdown of the ventilation air exhaust system.

4.4.9 RLM-RM-1 Respirator Cleaning and Laundry Maintenance (RLM) Facility

RLM-RM-1 is an Eberline AMS-3 particulate radiation monitor for the TMI RLM Facility. The monitor is located in the Mechanical Equipment Room in the RLM. Sampling for particulate activity is performed off of the monitor.

HISTORY INFO

4.5 TMI-2 Gaseous Effluent Release Points and Gaseous Radiation Monitor Data

TMI-2 has three (3) regulatory required gaseous effluent radiation monitors. These are HP-R-219, HP-R-219A and HP-R-225. These gaseous release points, radiation monitors, and sample points are shown in Table 4.2, and various gaseous effluent pathways are depicted in Figure 4.5.

4.5.1 HP-R-219 Station Ventilation Exhaust

HP-R-219 is a Victoreen particulate and gaseous radiation monitor for the TMI-2 ventilation exhaust. This in-plant effluent radiation monitor is located in the TMI-2 Auxiliary Building 328 foot elevation and has an associated sample panel.

4.5.2 HP-R-219A Station Ventilation Exhaust

HP-R-219A is a Victoreen particulate and gaseous radiation monitor for the TMI-2 ventilation exhaust. This in-plant effluent radiation monitor is located in the TMI-2 Auxiliary Building 328 foot elevation.

4.5.3 HP-R-225 Reactor Building Purge Air Exhaust Duct "A"

HP-R-225 is a Victoreen particulate and gaseous radiation monitor for the TMI-2 Reactor Building Purge Air Exhaust System. This in-plant effluent radiation monitor is located in the TMI-2 Auxiliary Building 328' elevation area.

HISTORY INFO

4.6 Control of Gaseous Effluent Releases

TMI gaseous effluent combined releases are controlled (per ODCM Part I for TMI-1 and ODCM Part II for TMI-2) by effluent sampling and radiation monitor set points. These measures assure that releases from the various vents do not combine to produce dose rates at the site boundary exceeding the most restrictive of 500 mrem per year to the total body or 3000 mrem per year to the skin, and 1500 mrem per year to the thyroid. This is done by restricting simultaneous releases and by limiting the dose rates that may be contributed by the various vents at any time. The various vent radiation monitor set points are each based on fractions of the above limits and do not exceed the above limits when summed together. These effluent radiation monitor set points are calculated using the methodology described in equations 4.1.1, or 4.1.2 and 4.2. The actual set points are then listed in TMI-1 Operations Procedure 1101-2.1.

The radioactive content of each batch of gaseous waste is determined prior to release by sampling and analyses in accordance with ODCM Part I for TMI-1 and ODCM Part II for TMI-2. The results of pre-release analyses are used with the calculational methods in Sections 4.1 and 4.2 to assure that the dose rates at the site boundary are maintained below the limits in ODCM Part I for TMI-1 and ODCM Part II for TMI-2.

Post-release analyses of samples composited from batch and continuous releases are performed in accordance with ODCM Part I for TMI-1 and ODCM Part II for TMI-2. The results of the analyses are used to assure that the dose rates at the site boundary are maintained within the limits of ODCM Part I for TMI-1 and ODCM Part II for TMI-2.

HISTORY INFO

TABLE 4.1

TMI-1 Gaseous Release Point and Gaseous Radiation Monitor Data

GASEOUS RADIATION MONITOR (DETECTOR)	LOCATION	GASEOUS RELEASE POINT	(F) FLOW RECORDER	RELEASE TERMINATION INTERLOCK (YES/NO) VALVES
RM-A4	306' Elevation Auxiliary Bldg.	Fuel Hand. Building Exhaust	FR-149	YES AH-E-10 AH-D-120 AH-D-121 AH-D-122
RM-A6	306' Elevation Auxiliary Bldg.	Auxiliary Building Exhaust	FR-150	YES AH-E-11
RM-A8	RMA-8/9 Bldg. Near BWST Exhaust	Station Vent	FR-149 & FR-150	YES WDG-V47 AH-E-10 AH-E-11 Starts MAP-5 Radioiodine Sampler
RM-A5	322' Elevation Second Floor Turbine Bldg.	Condenser Off Gas Exhaust	FR-1113	YES Starts MAP-5 Radioiodine Sampler
RM-A15	322' Elevation Second Floor Turbine Bldg.	Condenser Off Gas Exhaust	FR-1113	YES Starts MAP-5 Radioiodine Sampler
RM-A7	306' Elevation Auxiliary Bldg.	Waste Gas Decay Tanks (A,B,C)	FR-123	YES WDG-V47
RM-A9	RMA-8/9 Bldg. Near BWST	Reactor Building Purge Exhaust	FR-909/ FR-148	YES AH-V-1A/B/C/D WDG-534/535 Starts MAP-5 Radioiodine Sampler
RM-A14	331' Elevation ESF FHB Outside Chem. Addition Bldg.	ESF Fuel Handling Building Exhaust	FR-1104A/B	NO Manual Actions

HISTORY ONLY

TABLE 4.1

TMI-1 Gaseous Release Point and Gaseous Radiation Monitor Data

GASEOUS RADIATION MONITOR (DETECTOR)	LOCATION	GASEOUS RELEASE POINT	RELEASE TERMINATION INTERLOCK (YES/NO) VALVES
ALC-RMI-18	Chemical Cleaning Bldg. 304' Elevation	CCB Exhaust System (Typical flow rate is 10,000 cfm)	NONE
WHP-RIT-1	WHPF Mechanical Equipment Room	WHPF Exhaust System (Typical flow rate is 7,500 cfm)	YES WHPF Ventilation Trips
RLM-RM-1	RLM-Mechanical Equipment Room	RLM Exhaust System (Typical flow rate is 900 cfm)	NONE

TABLE 4.2

TMI-2 Gaseous Release Point and Gaseous Radiation Monitor Data

GASEOUS RADIATION MONITOR (DETECTOR)	LOCATION	GASEOUS RELEASE POINT	RELEASE TERMINATION INTERLOCK (YES/NO) VALVES
HP-R-219	328' Elevation Auxiliary Building	Station Vent Exhaust	NONE
HP-R-219A	328' Elevation Auxiliary Building	Station Vent Exhaust	NONE
HP-R-225	328' Elevation Auxiliary Building	Reactor Bldg Purge Exhaust Duct "A"	NONE

HISTORY INFO

TABLE 4.3

Dose Factors for Noble Gases and Daughters*

Radionuclide	Gamma Total Body Dose Factor(a) K_i (mrem/yr per $\mu Ci/m^3$)	Beta Skin Dose Factor(b) L_i (mrem/yr per $\mu Ci/m^3$)	Gamma Air Dose Factor M_i (mrad/yr per $\mu Ci/m^3$)	Beta Air Dose Factor N_i (mrad/yr per $\mu Ci/m^3$)
Kr-83m	7.56E-02**	---	1.93E+01	2.88E+02
Kr-85m	1.17E+03	1.46E+03	1.23E+03	1.97E+03
Kr-85	1.61E+01	1.34E+03	1.72E+01	1.95E+03
Kr-87	5.92E+03	9.73E+03	6.17E+03	1.03E+04
Kr-88	1.47E+04	2.37E+03	1.52E+04	2.93E+03
Kr-89	1.66E+04	1.01E+04	1.73E+04	1.06E+04
Kr-90	1.56E+04	7.29E+03	1.63E+04	7.83E+03
Xe-131m	9.15E+01	4.76E+02	1.56E+02	1.11E+03
Xe-133m	2.51E+02	9.94E+02	3.27E+02	1.48E+03
Xe-133	2.94E+02	3.06E+02	3.53E+02	1.05E+03
Xe-135m	3.12E+03	7.14E+02	3.36E+03	7.39E+02
Xe-135	1.81E+03	1.86E+03	1.92E+03	2.46E+03
Xe-137	1.42E+03	1.22E+04	1.51E+03	1.27E+04
Xe-138	8.83E+03	4.13E+03	9.21E+03	4.75E+03
Ar-41	8.84E+03	2.69E+03	9.30E+03	3.28E+03

HISTORY INFO

* Dose factors are for immersion exposure in uniform semi-infinite cloud of noble gas radionuclides that may be detected ingaseous effluents. Dose factor values are taken from Regulatory Guide 1.109 (Rev. 1), Table B-1.

** 7.56E-02 = 7.56×10^{-2}.

(a) Total body dose factor for gamma penetration depth of 5 cm into the body.

(b) Skin dose factor at a tissue depth or tissue density thickness of 7 mg/cm^2.

TABLE 4.4

Atmospheric Dispersion Factors for Three Mile Island

• STATION VENT
• SECTOR AVERAGE X/Q (IN SEC/M^3)

DISTANCE (IN METERS)

SEASON - ANNUAL

SECTOR	610	2413	4022	5631	7240	12067	24135	40225	56315	72405
N	1.18E-07	5.32E-07	2.95E-07	1.93E-07	1.39E-07	5.52E-08	1.91E-08	5.02E-09	1.88E-09	1.09E-09
NNE	1.70E-07	7.17E-07	3.45E-07	2.00E-07	1.39E-07	5.58E-08	1.70E-08	4.77E-09	1.98E-09	9.69E-10
NE	1.12E-07	1.75E-07	3.26E-07	1.86E-07	1.21E-07	5.00E-08	1.67E-08	4.67E-09	1.85E-09	9.93E-10
ENE	1.09E-07	2.13E-07	2.67E-07	1.53E-07	1.05E-07	4.31E-08	1.42E-08	4.42E-09	1.59E-09	8.64E-10
E	2.31E-07	1.71E-07	1.52E-07	1.49E-07	1.06E-07	4.63E-08	1.52E-08	5.19E-09	2.48E-09	1.50E-09
ESE	3.50E-07	2.12E-07	2.50E-07	1.48E-07	9.48E-08	3.98E-08	1.50E-08	5.92E-09	2.92E-09	1.93E-09
SE	4.19E-07	3.79E-07	2.53E-07	1.55E-07	1.11E-07	4.82E-08	1.81E-08	6.24E-09	3.30E-09	2.22E-09
SSE	2.90E-07	3.62E-07	2.55E-07	1.49E-07	1.11E-07	5.02E-08	1.98E-08	6.97E-09	2.94E-09	1.70E-09
S	1.87E-07	6.47E-08	2.16E-07	1.30E-07	8.65E-08	4.09E-08	1.40E-08	4.96E-09	1.99E-09	1.04E-09
SSW	6.13E-08	4.16E-08	1.56E-07	1.03E-07	6.81E-08	2.72E-08	9.74E-09	3.01E-09	1.50E-09	8.23E-10
SW	5.76E-08	1.14E-07	1.70E-07	1.05E-07	6.93E-08	2.51E-08	9.34E-09	2.72E-09	1.33E-09	8.33E-10
WSW	8.52E-08	3.75E-07	2.14E-07	1.26E-07	7.74E-08	3.08E-08	1.02E-08	3.28E-09	1.39E-09	9.69E-10
W	1.15E-07	5.80E-07	2.88E-07	1.63E-07	1.18E-07	4.23E-08	1.72E-08	5.06E-09	1.98E-09	1.25E-09
WNW	1.41E-07	6.28E-07	3.30E-07	2.19E-07	1.48E-07	5.68E-08	1.95E-08	6.32E-09	2.16E-09	1.34E-09
NW	1.42E-07	5.67E-07	3.17E-07	1.93E-07	1.30E-07	5.62E-08	2.06E-08	5.90E-09	2.70E-09	1.45E-09
NNW	1.00E-07	5.77E-07	3.18E-07	1.80E-07	1.27E-07	5.20E-08	1.77E-08	4.82E-09	2.01E-09	1.22E-09

• STATION VENT
• SECTOR AVERAGE D/Q (IN M^2)

DISTANCE (IN METERS)

SEASON - ANNUAL

SECTOR	610	2413	4022	5631	7240	12067	24135	40225	56315	72405
N	2.51E-09	8.72E-10	4.84E-10	2.98E-10	2.50E-10	8.57E-11	2.51E-11	4.98E-12	1.57E-12	7.84E-13
NNE	3.89E-09	1.98E-09	9.54E-10	4.39E-10	3.38E-10	1.10E-10	2.89E-11	6.06E-12	2.10E-12	8.89E-13
NE	2.58E-09	6.70E-10	9.13E-10	4.31E-10	2.97E-10	1.04E-10	2.87E-11	6.01E-12	1.99E-12	9.23E-13
ENE	2.15E-09	5.85E-10	5.54E-10	3.06E-10	2.08E-10	8.30E-11	2.32E-11	5.41E-12	1.63E-12	7.64E-13
E	5.54E-09	1.23E-09	6.17E-10	4.59E-10	3.63E-10	1.34E-10	3.66E-11	9.44E-12	3.77E-12	1.97E-12
ESE	9.17E-09	2.05E-09	1.31E-09	8.66E-10	5.11E-10	1.82E-10	5.77E-11	1.72E-11	7.07E-12	4.07E-12
SE	1.22E-08	2.88E-09	1.84E-09	1.02E-09	6.85E-10	2.60E-10	8.30E-11	2.34E-11	9.42E-12	5.51E-12
SSE	7.50E-09	1.62E-09	1.08E-09	5.89E-10	4.49E-10	1.87E-10	6.16E-11	1.61E-11	5.67E-12	2.83E-12
S	3.86E-09	6.53E-10	6.27E-10	3.59E-10	2.32E-10	1.06E-10	3.05E-11	8.10E-12	2.73E-12	1.23E-12
SSW	1.13E-09	2.94E-10	4.19E-10	2.53E-10	1.56E-10	5.38E-11	1.68E-11	3.91E-12	1.64E-12	7.84E-13
SW	1.19E-09	3.84E-10	4.96E-10	2.80E-10	1.70E-10	5.24E-11	1.65E-11	3.62E-12	1.49E-12	8.12E-13
WSW	1.77E-09	8.31E-10	6.49E-10	3.50E-10	1.99E-10	6.73E-11	1.89E-11	4.58E-12	1.63E-12	9.90E-13
W	2.41E-09	1.29E-09	6.81E-10	3.65E-10	2.96E-10	1.12E-10	3.11E-11	6.90E-12	2.26E-12	1.25E-12
WNW	3.20E-09	1.39E-09	7.73E-10	5.91E-10	3.66E-10	1.19E-10	3.43E-11	8.36E-12	2.39E-12	1.29E-12
NW	3.25E-09	1.23E-09	7.39E-10	4.22E-10	2.77E-10	1.14E-10	7.28E-11	7.61E-12	2.92E-12	1.36E-12
NNW	1.98E-09	9.88E-10	5.71E-10	3.05E-10	2.23E-10	8.21E-11	2.41E-11	4.93E-12	1.72E-12	9.03E-13

DATA FROM 1/1/78 THROUGH 12/31/86 USED IN CALCULATIONS

HISTORY ONLY